CITY OF WESTON, FLORIDA
CODE OF ORDINANCES

TABLE OF CONTENTS

TITLE I: COMPREHENSIVE PROVISIONS

CHAPTER		PAGE
1.	Definitions	1
2.	Rules for Interpretation and Construction	56

TITLE II: LEGISLATIVE

CHAPTER		PAGE
20.	City Commission	61
21.	Elections	63
22.	Business Relationships	65
23.	Naming of Public Places and Recognition of Community Contributions	66
24.	Special Districts	67

TITLE III: EXECUTIVE

CHAPTER		PAGE
30.	City Management	74
31.	Code Enforcement	75

TITLE IV: TAXES, FEES AND COSTS

CHAPTER		PAGE
40.	Business Tax Receipts	100
41.	Public Service Tax	111
42.	Homestead Exemption	113
43.	Administrative Review and Cost Recovery	114
44.	Technical Rescue and Hazardous Substance Cost Recovery	116
45.	Payments Received by the City	117
46.	Liens	118

CITY OF WESTON, FLORIDA
CODE OF ORDINANCES

TABLE OF CONTENTS

TITLE V: PUBLIC SAFETY

CHAPTER		PAGE
50.	Fire and Safety	119
51.	Automated External Defibrillators	123
52.	Prohibited Acts	126
53.	Animal Care and Regulation	135

TITLE VI: EMERGENCIES

CHAPTER		PAGE
60.	Emergency Management	139
61.	Disaster Access and Debris Removal	142
62.	Storm Shutters Regulations	147
63.	Hurricane Regulations	148
64.	Flood Damage Prevention	150

TITLE VII: MOTOR VEHICLES AND VESSELS

CHAPTER		PAGE
70.	Servicing and Storage	164
71.	Traffic Control and Enforcement	165
72.	Parking Prohibitions	166
73.	Commercial Vehicle Weight and Load Restrictions	172

CITY OF WESTON, FLORIDA
CODE OF ORDINANCES

TABLE OF CONTENTS

TITLE VIII: BUSINESS- REGULATIONS AND STANDARDS

CHAPTER **PAGE**

80. Home Occupations 179
81. Valet Parking 181
82. Extended Operating Hours 187
83. Alcoholic Beverages 189
84. Outdoor Seating or Bar Areas 194
85. Convenience Businesses 196
86. Adult Businesses 198
87. Pay Telephones 219
88. Private Detectives and Criminal Investigators 220
89. Mobile Vending 221
90. Newspaper Racks 223
91. Lettering on Commercial Vehicles 230
92. Commercial Mail Receiving Agencies 231
93. Solid Waste Collection Franchise 232

TITLE IX: PROPERTY-REAL AND PERSONAL

CHAPTER **PAGE**

95. Property Maintenance 233
96. Lost, Unclaimed or Abandoned Personal Property 245

TITLE X: PUBLIC PARKS, RECREATION AND SPECIAL EVENTS

CHAPTER **PAGE**

100. Public Parks, Recreation and Special Events 250

CITY OF WESTON, FLORIDA
CODE OF ORDINANCES

TABLE OF CONTENTS

TITLE XI: PUBLIC WORKS

CHAPTER **PAGE**

110. Solid Waste; Recycling 268
111. Water and Sewer Services 283

TITLE XII: LAND USE

CHAPTER **PAGE**

120. Real Property Transfers, Easements and Encroachments 295
121. Excavation and Mining 298
122. Tree Preservation 299
123. Landscaping 322
124. Zoning 339
125. Land Development 526
126. Signs 596
127. Engineering Standards 614
128. Building Codes-Adopted 750
129. Minimum Housing 751
130. Unsafe Structures 758
131. Facilities in Rights-of-Way 761
132. Public Rights of Way Regulations for Communications Service Providers 774
133. Telecommunication Facilities and Antenna Towers 792

TITLE I: COMPREHENSIVE PROVISIONS

CHAPTER 1. DEFINITIONS.

§ 1.01 DEFINITIONS.

1.01 (A) ***General rule.*** Words and phrases shall be taken in their plain, or ordinary and usual sense. However, technical words and phrases having a peculiar and appropriate meaning in Law shall be understood according to their technical import.

1.01 (B) ***FEMA (Federal Emergency Management Agency) definitions.*** Technical definitions for use in connection with FEMA may be found in Chapter 64.

1.01 (C) ***Definitions.*** For the purpose of this Code, the following definitions shall apply unless the context clearly indicates or requires a different meaning. Parentheticals following the defined term are included to demonstrate the context for its use.

ABANDON. To forsake an Animal in a Street, road, public or private place without providing for the care, sustenance, protection, and shelter of such Animal.

ABANDONED (Motor Vehicles and Vessels).

(1) Any vehicle located on Public Property or Private Property that does not have lawfully affixed thereto or displayed thereon a valid, unexpired license plate that permits its operation upon the Highways of the State of Florida.

(2) Any vehicle or part thereof that is left on Public Property continuously without being moved for a period of 72 hours or more.

(3) Any vehicle or part thereof located on Public Property illegally or in such a manner as to constitute a hazard or obstruction to the movement of pedestrian or other vehicular Traffic on a Public Right-Of-Way, Street, or Highway.

(4) Any vehicle or part thereof that has remained on Private Property without the consent of the Owner or Person in control of such Private Property for a continuous period of 72 hours or more.

(5) Any "Inoperative Vehicle," as defined herein.

(6) Any Vessel located on public or Private Property that does not have affixed thereto or displayed thereon a valid, unexpired decal that evidences its current registration.

ABANDONMENT (Telecommunications). The permanent cessation of all uses of a Communications Facility; provided that this term shall not include cessation of all use of a facility within a physical Structure where the physical Structure continues to be used. By way of example, and not limitation, cessation of all use of a cable within a conduit, where conduit continues to be used, shall not be Abandonment of a facility in the Public Rights-Of-Way.

ACCESSORY STRUCTURE. A Structure, the use of which is incidental to that of the Principal Structure and which is located on the same Premises as the main Building that includes, but is not limited to, cabanas, carports, fences, garages, garden walls, garden Structures, patios, permanent grills, pools and storage Buildings, but does not include any Dwelling.

ACCESSORY USE. A use that is subordinate to, incidental to and customarily associated with a main permitted use.

ADULT BOOKSTORE/ADULT NOVELTY STORE/ADULT VIDEO STORE. An Establishment having a substantial or significant portion of its stock-in-trade, which shall be defined as 20 percent or more of the Gross Floor Area of the Establishment, devoted to Adult Material.

ADULT BOOTH.

(1) A small enclosed or partitioned area inside an Adult Entertainment Establishment that is:

(a) Designed or used for the viewing of Adult Material by one or more Persons; and

(b) Accessible to all persons, regardless of whether a fee is charged for access.

(2) The term ***ADULT BOOTH*** includes but is not limited to a "peep show" booth, or other booth used to view Adult Material. The term ***ADULT BOOTH*** does not include a foyer through which a Person can enter or exit the Establishment, or a rest room.

ADULT DANCING ESTABLISHMENT. An Establishment where Employees or independent contractors display or expose Specified Anatomical Areas to others, regardless of whether the Employees or independent contractors actually engage in dancing.

ADULT DOMINATION/SUBMISSION PARLOR. An Adult Entertainment Establishment specializing in bondage, sadomasochism, humiliating activities or other similar activities that depict, describe or relate to the Specified Sexual Activities or Specified Anatomical Areas.

ADULT ENTERTAINMENT. Any activities that depict, describe or relate to specified sexual acts or Specified Anatomical Areas or that feature topless dancers, exotic dancers, strippers, male or female impersonators, the modeling of clothing revealing or less than completely and opaquely covering Specified Anatomical Areas, or similar activities.

ADULT ENTERTAINMENT ESTABLISHMENT.

(1) An Adult Theater, Adult Bookstore/Adult Novelty Store/Adult Video Store, Adult Motel, Adult Domination and Submission Parlor, Adult Dancing Establishment, or other Establishment or business operated for Commercial Gain where an Employee, independent contractor, Operator, or Owner exposes his or her Specified Anatomical Area for viewing by patrons, including but not limited to massage Establishments, whether or not licensed pursuant to Chapter 480, Florida Statutes, tanning salons, modeling studios, or lingerie studios.

(2) Excluded from this definition are Educational Institutions where the exposure of Specified Anatomical Areas is associated with a curriculum or program.

(3) An Establishment that possesses an Adult Entertainment license is presumed to be an Adult Entertainment Establishment.

ADULT MATERIAL. One or more of the following, regardless of whether it is new or used:

(1) Books, magazines, periodicals, or other printed matter, photographs, films, motion pictures, video cassettes, DVDs, slides, or other visual representations; recordings, other audio matter; and novelties or devices that have, as their primary or dominant theme, subject matter depicting, exhibiting, illustrating, describing, or relating to Specified Sexual Activities or Specified Anatomical Areas; or

(2) Instruments, novelties, devices, or paraphernalia that are designed for use in connection with Specified Sexual Activities, excluding bona fide birth control devices.

ADULT MINI MOTION PICTURE THEATER. An enclosed Building, or a portion thereof with at least one seat, or viewing booth or area, regularly used for presenting Adult Material, for observation by patrons therein. The viewing or adult "booth" referenced in this definition is defined as a small enclosed or partitioned area inside the theater designed or used for the viewing of Adult Material by one or more Persons, regardless of whether a fee is charged for access.

ADULT MOTEL. A Hotel, Motel, boardinghouse, rooming house, or other place of temporary lodging that includes the word “adult” in a name it uses or otherwise advertises the presentation of Adult Material as a primary inducement for patronage.

ADULT MOTION PICTURE THEATER OR AN ADULT THEATER. An enclosed Building with each viewing room having a capacity of 50 or more Persons regularly used for presenting Adult Material for observation by patrons therein, containing no partitions between seats.

AFFORDABLE HOUSING. Housing for which monthly rents or monthly mortgage payments (including taxes and insurance) do not exceed 30% of an amount representing the percentage (very low = 50%; low = 80%; moderate = 120%) of the median income limits, as published by the U.S. Department of Housing and Urban Development, adjusted for family size for the households.

ALCOHOLIC BEVERAGE. Any beverage as described in Section 561.01(4), Florida Statutes.

ALTERNATIVE TOWER STRUCTURE (Telecommunications). A design mounting Structure that camouflages or conceals the presence of an Antenna or Telecommunications Tower, for example, Flag poles, man made trees, clock towers, bell steeples, light Poles, Utility Poles and similar alternative designs.

AMUSEMENT CENTER. A Building or complex of Buildings where activities relating to games or recreation are conducted or held.

ANIMAL. Every living nonhuman creature.

ANTENNA (Telecommunications). A transmitting and/or receiving device mounted on a Telecommunications Tower, Building or Structure and used in Wireless Communications Services that radiates or captures electromagnetic waves, digital signals, analog signals, radio frequencies, wireless communications signals and other communications signals including directional Antennas such as panel and microwave dish Antennas and omni-directional Antennas such as Whips, but excluding radar Antennas, amateur radio Antennas and satellite earth stations.

APPLICANT. Any individual or entity requesting action of the City and all Persons representing such individual or entity (including, but not limited to, all attorneys, architects, Landscape Architects, Engineers and lobbyists), and any individual who, directly or indirectly, owns or controls more than five percent of any such entity requesting action of the City.

ARCHAEOLOGICAL SALVAGE EXCAVATION. A process conducted on a cultural resource site, or a portion of a site, by the systematic removal of prehistoric or historic cultural remains in order to acquire fundamental information necessary for understanding a site within the proper historic context. This process requires the appropriate regulatory approval, field survey, excavation, artifact analysis, and curation reports.

ARCHAEOLOGICAL SITE. A location that has yielded or may be likely to yield information important in history or prehistory, and is a site that contains physical evidence of past human activity. An Archaeological Site may be identified using On-Site investigations or site predictive models. Archaeological Sites are evidenced by the presence of artifacts on or below the ground surface indicating the past use of a location by people. A designated Archaeological Site is one that meets these criteria, has been designated by the County Commission, and appears on the Broward County Land Use Plan Map Series or is listed on the Florida Master Site File.

ARCHITECTURAL EMBELLISHMENT. A two or three-dimensional architectural decoration added to a Building or Building site.

ARRAY (Telecommunications). A group of up to 12 Antennas that are either:

(1) Mounted or side mounted on the rooftop of a Building or rooftop Structure(s); or

(2) Directly or indirectly mounted on a Telecommunications Tower.

ARTERIAL ROAD. A road having the meaning given in Section 334.03(1), Florida Statutes.

ASSESSED PROPERTY. All or any portion of Parcels Of Land included on the Assessment Roll.

ASSESSMENT or ***SPECIAL ASSESSMENT.*** Any Assessment or Special Assessment, or revolving fund or funds levied against benefitted property out of which may be paid the cost, or a portion thereof, of any improvement to the property.

ASSESSMENT ROLL. The non-ad valorem Assessment roll relating to a Solid Waste Collection Services Assessment approved by the Assessment resolution.

ASSOCIATION. A group or organization comprised of Owners or Tenants occupying a common deeded property, zoned as either commercial or residential, established to provide for the management and maintenance of that property.

ASSOCIATION PROPERTY. That property, both real and personal, in which title or ownership is vested in the Homeowners' Association for the use and benefit of its members. Association Property shall include, but shall not be limited to, private parks, private roads, water bodies, Landscaping easements, wall easements, etc. In the case of a rental apartment Building or complex, this term shall refer to all areas other than the interiors of the residential Dwelling Units.

AT LARGE (Animal Care and Regulation). An Animal not on the Owner's property, and not under restraint or Direct Control, custody, charge or possession of the Owner, or other responsible Person.

ATTACHMENT (Telecommunications). The physical attachment(s) of a Cable System, as defined by City Code, to a legally maintained Utility, electricity, telephone, power or light Pole consisting of cables, wires, and supporting hardware required to support the provision of Cable Services.

AUTHORIZED PRIVATE RECEPTACLE (Solid Waste). A Litter storage and collection receptacle established for private use and operated in conformity with the City Code.

AUTOMATED CART (Solid Waste). The wheeled portable receptacle(s) provided by the City's designated contractor that shall be used for household collection, storage and curbside placement of Household Waste.

AUTOMATED EXTERNAL DEFIBRILLATOR DEVICE. A defibrillator device that:

(1) Is commercially distributed in accordance with the Federal Food, Drug, and Cosmetic Act;

(2) Is capable of recognizing the presence or absence of ventricular fibrillation, and is capable of determining without intervention by the user of the device whether defibrillation should be performed; and

(3) Upon determining that defibrillation should be performed, is able to deliver an electrical shock to an individual.

AXLE LOAD. The total load transmitted to the road by all wheels whose centers are included between two parallel transverse vertical planes 40 inches apart, extending across the full width of the vehicle.

BACKHAUL NETWORK (Telecommunications). The lines that connect personal wireless service facilities to one or more cellular telephone switching offices, and/or long distance providers, or the public switched telephone network.

BAR, COUNTRY CLUB. A Bar housed completely within a country club facility with at least one 18-hole golf course.

BAR, HOTEL. A Bar operated in connection with a Hotel or apartment Hotel.

BAR, LOUNGE, or ***TAVERN.*** Any place devoted primarily to onsite consumption of Alcoholic Beverages.

BAR AREA. The portion of a Restaurant dedicated to the serving of Alcoholic Beverages to patrons, including the Gross Floor Area used for customer service, preparation of Alcoholic Beverages, bottle displays, refrigerated cases, and storage compartments.

BDD. The Bonaventure Development District.

BIKEWAY. Any road, path, or way that is specifically designated as being open to non-motorized vehicular travel, regardless of whether such facilities are designated for the exclusive use of bicycles or are to be shared with other transportation modes.

BOTTLE CLUB. A Commercial Establishment operated for a profit, whether or not a profit is actually made, wherein patrons consume Alcoholic Beverages which are brought onto the Premises and not sold or supplied to the patrons by the establishment, whether the patrons bring in and maintain custody of their own Alcoholic Beverages or surrender custody to the establishment for dispensing on the Premises, and which is located in a Building or other enclosed permanent Structure.

BREAST HEIGHT (Tree Preservation). A height of 4½ feet above the top of the rootball.

BROADCASTING FACILITY (Telecommunications). Any Telecommunications Tower or Antenna built primarily for the purpose of broadcasting AM, FM or television signals.

BUILDING. Any Structure that has a Roof and walls.

BUILDING CODE. The codes promulgated pursuant to Chapter 553, Part IV, Florida Statutes, otherwise known as the Florida Building Code, including Broward County Amendments.

BUILDING PERMIT. Any permit required by the Building Code.

BUSINESS (Business Tax). The work, vocation, profession, occupation, commercial enterprise or trade in which a Person is engaged, and all activities and matters together with all devices, machines, vehicles and appurtenances used therein, any of which are conducted, either directly or indirectly, on or from any Premises in the City. Business does not include nonprofit Charitable Institutions, nonprofit Educational Institutions, or nonprofit Religious Institutions.

Business also does not include a Person that solely manages Personal Investments from a Residential Property.

BUSINESS RELATIONSHIP. A member of the City Commission or a City Advisory Board has a Business Relationship with a Person or an entity if any of the following exist:

(1) The member of the City Commission or City Advisory Board has any ownership interest, directly or indirectly, in excess of 1% in the entity,

(2) The member of the City Commission or City Advisory Board is a partner, co-shareholder or joint venturer with the Person in any business venture;

(3) The entity or Person is a client of the member of the City Commission or City Advisory Board, or a client of another professional working from the same office and for the same employer as the member of the City Commission or City Advisory Board;

(4) The member of the City Commission or City Advisory Board is a client of the entity or the Person;

(5) The entity or Person is a customer of the member of the City Commission or City Advisory Board (or his/her employer) and transacts more than 5% of the business in a given calendar Year of the member of the City Commission or City Advisory Board (or his/her employer) or more than $25,000 of business in a given calendar Year; or

(6) The member of the City Commission or City Advisory Board is a customer of the entity or the Person and transacts more than 5% of the business in a given calendar Year of the entity or Person or more than $25,000 of business in a given calendar Year.

BUSINESS TAX. The fee charged by the City for the privilege of engaging in any Business within the City, but does not include any fees or licenses paid to any board, commission, or officer for permits, registration, examination, or inspection.

BUSINESS TAX RECEIPT. A document issued by the City that bears the words "Business Tax Receipt" and evidences that the Person in whose name the document is issued has complied with the provisions of Chapter 40 by paying the required Business Tax.

CABLE SERVICE (Telecommunications).

(1) The one-way transmission to Subscribers of Video Programming or any other programming service.

(2) Subscriber interaction, if any, that is required for the selection or use of such Video Programming or other programmed service.

CABLE SERVICE PROVIDER (Telecommunications). A Person that provides Cable Service over a Cable System.

CABLE SYSTEM (Telecommunications).

(1) Any facility consisting of a set of closed transmission paths or other transmission lines or forms of terrestrial transmission and associated signal generation, reception, and control equipment that is designed to provide Cable Service which includes Video Programming and which is provided to multiple Subscribers within the City.

(2) Such term does not include:

(a) A facility that serves only to retransmit the television signals of one or more television broadcast stations.

(b) A facility that serves only Subscribers in one or more multiple-unit Dwellings under common ownership, control, or management, unless such facility or facilities use any Public Right-Of-Way.

(c) A facility that serves Subscribers without using any Public Right-Of-Way.

(d) A facility of a common Carrier that is subject, in whole or in part, to the provisions of Title 11 of the federal Communications Act of 1934, except that such facility shall be considered a Cable System other than for purposes of 47 USC 541(c) to the extent such facility is used in the transmission of Video Programming directly to Subscribers, unless the extent of such use is solely to provide interactive on demand services.

(e) An open video System that complies with 47 USC 573; or

(f) Any facilities of any electric Utility used solely for operating its electric Utility systems.

CALIPER (Tree Preservation). The diameter of the Tree trunk(s) measured at Breast Height.

CAMOUFLAGED FACILITY (Telecommunications). A facility that is disguised, hidden, part of an existing or proposed Structure, or placed within an existing or proposed Structure in a manner that makes it not readily identifiable as a Wireless Communications Facility. A Camouflaged Facility may or may not have a secondary function (e.g., bell tower, spire, Flag pole, etc.). This term shall be synonymous with Stealth Facility.

CANOPY COVERAGE (Tree Preservation). The areal extent of ground within the Dripline of a Tree.

CAPACITY. (Utilities) Refers to the maximum service volume at the adopted level of service standard.

CARNIVAL. Any commercial enterprise where the revenue realized flows to private Owners or operators as intended profit and where such enterprises have as any part of their operation sideshows, games of chance, hawkers, barkers, rides, games, and refreshments operated

by vendors the majority of whom are nonresident, transitory, and employees of such commercial enterprises.

CARRIER (Telecommunications). A company licensed by the Federal Communications Commission (FCC) that provides wireless services. A Tower builder or Owner is not a Carrier unless licensed to provide Personal Wireless Services.

CERTIFICATE OF OCCUPANCY. The written certification issued by the City that a structural improvement is ready for occupancy for its intended use.

CERTIFIED LAND USE PLAN. The City's local land use plan that has been certified by the Broward County Planning Council as being in substantial conformity with the County Land Use Plan.

CHARITABLE INSTITUTIONS (Business Tax). Nonprofit corporations operating physical facilities in this State at which are provided charitable services, a reasonable percentage of which are without cost to those unable to pay.

CHILD CARE. The care, protection, and supervision of a child, for a period of less than 24 hours a day on a regular basis, which supplements parental care, enrichment, and health supervision for the child, in accordance with his or her individual needs, and for which a payment, fee, or grant is made for care.

CHILD CARE FACILITY. Any Child Care center or Child Care arrangement that provides Child Care for more than five children unrelated to the operator and that receives a payment, fee, or grant for any of the children receiving care, wherever operated, and whether or not operated for profit. The following are not included within this definition: (a) Public Schools and nonpublic schools and their integral programs, except as provided in Section 402.3025, Florida Statutes; (b) Summer camps having children in full-time residence; (c) Summer day camps; (d) Bible schools normally conducted during vacation periods; and (e) Operators of transient establishments, as defined in Chapter 509, Florida Statutes which provide Child Care services solely for the guests of their establishment or resort, provided that all Child Care personnel of the establishment are screened according to the level 2 screening requirements of Chapter 435, Florida Statutes.

CITY (Location). The geographical area within the boundaries set forth in the City Charter, including the Indian Trace Development District and Bonaventure Development District.

CITY (Entity). The elected officials, employees and/or authorized agents of the City of Weston, Florida.

CITY ATTORNEY. An individual attorney or a law firm appointed by the City Commission pursuant to Section 3.07 of the City Charter.

CITY COMMISSION. The body vested with all legislative powers of the City pursuant to Section 2.01 of the City Charter.

CITY ENGINEER. The designee of the City Manager or the consulting engineering firm engaged by the City for engineering services, or an employee of that firm who is registered to practice engineering in the State.

CITY MANAGER. The individual employed by the City pursuant to Section 3.01 of the City Charter who shall be the chief executive officer and chief administrative officer of the City.

CLEAR TRUNK (Tree Preservation). The distance between the top of the rootball along the vertical trunk or trunks of a Tree to the point at which lateral branching or fronds begin.

***THE CODE, or* CITY CODE.** The Code of Ordinances of the City.

CODE ENFORCEMENT OFFICER. Any employee or other agent of the City designated by the City Manager, whose duties are to ensure compliance with the Code.

COLLECTOR ROAD. A road having that meaning given in Section 334.03(4), Florida Statutes.

COLLOCATION (Telecommunications). The situation when a second or subsequent wireless provider uses an existing Structure to locate a second or subsequent Antenna. The term includes the ground, platform, or Roof installation of equipment enclosures, cabinets, or Buildings, and cables, brackets, and other equipment associated with the location and operation of the Antennas.

COMMERCIAL ESTABLISHMENT. A business, location, or place that conducts or allows to be conducted on its Premises an activity for Commercial Gain.

COMMERCIAL GAIN. Operated for pecuniary gain, which shall be presumed for an establishment that has received a Business Tax Receipt. For the purpose of this Code, operation for commercial or pecuniary gain shall not depend on actual profit or loss.

COMMERCIAL HANDBILL. Any printed or written matter, any sample or device, dodger, circular, leaflet, pamphlet, paper, booklet, or any other printed or otherwise reproduced original or copies of any matter of literature:

(1) Which advertises for sale any merchandise, product, services, commodity, or thing;

(2) Which directs attention to any business or mercantile or Commercial Establishment or other activity, for the purpose of either directly or indirectly promoting the interest thereof by sales;

(3) Which directs attention to or advertises any meeting, theatrical performance, exhibition, or event of any kind, for which an admission fee is charged for the purpose of private gain or profit; but the terms of this clause shall not apply where an admission fee is charged or a collection is taken up for the purpose of defraying the expenses incident to such meeting, theatrical performance, exhibition, or event of any kind, when either of the same is held, given, or takes place in connection with the dissemination of information which is not restricted under the

ordinary rules of decency, good morals, public peace, safety, and good order; provided, that nothing contained in this clause shall be deemed to authorize the holding, giving, or taking place of any meeting, theatrical performance, exhibition, or event of any kind, without a license, where such license is or may be required by any Law of this State, or under any ordinance of this City or municipality located within Broward County; or

(4) Which, while containing reading matter other than advertising matter, is predominantly and essentially an advertisement, and is distributed or circulated for advertising purposes, or for the private benefit and gain of any Person so engaged as advertiser or distributor.

COMMERCIAL MAIL RECEIVING AGENCY (CMRA). A business that rents or leases, for a fee, mailboxes or other mail receiving capabilities to the general public or otherwise allows the public to receive mail or packages at a location other than the consumer's home or place of employment.

COMMERCIAL MOBILE RADIO SERVICES (Telecommunications). Per Section 704 of the Telecommunications Act of 1996, any of several technologies using radio signals at various frequencies to send and receive voice, data and video.

COMMERCIAL TRASH (Solid Waste). Every waste accumulation of dust, paper, paper cartons, cardboard cartons, excelsior, rags, or other accumulations that are usually attendant to the operations of a business or Commercial Establishment.

COMMON AREA. The portion of land(s) within a Development that is owned by an Association of the property Owners within the Development or the Owner of the Development and is available for use by, or the benefit of, the occupants of the Development.

COMMUNICATIONS ACT (Telecommunications). The Communications Act of 1934, 47 USC 151 *et seq*.

COMMUNICATIONS FACILITY (Telecommunications). Any permanent or temporary plant, equipment and property, including but not limited to cables, wires, conduits, ducts, fiber optics, Antennae, converters, splice boxes, cabinets, hand holes, manholes, vaults, drains, surface location markers, appurtenances, and other equipment or pathway placed or maintained or to be placed or maintained in the Public Rights-Of-Way of the City and used or capable of being used to transmit, convey, route, receive, distribute, provide or offer Communications Services.

COMMUNICATIONS SERVICES (Telecommunications). The transmission, conveyance or routing of voice, data, audio, video, or any other information or signals to a point, or between or among points, by or through any electronic, radio, satellite, cable, optical, microwave, or other medium or method now in existence or hereafter devised, regardless of the protocol used for such transmission or conveyance. Personal Wireless Services, as defined under federal Law, 47 USC 332(c)(7)(C), and includes but is not limited to, cellular personal Communications Services, specialized mobile radio, enhanced specialized mobile radio, and paging service, and Personal Wireless Service providers, to the extent allowed by applicable Law, may be subject to other ordinances of the City and may require separate authorization from the City for placement of facilities within the City.

COMMUNICATIONS SERVICES PROVIDER (Telecommunications). Any Person making available or providing Communications Services through the placement or maintenance of a Communications Facility in Public Rights-Of-Way, including, but not limited to, Cable Service and Video Service Providers and certificate holders.

COMMUNITY CENTER. A Building or group of Buildings used for social, cultural, and educational activities and designed to accommodate and serve significant segments of the community.

CONCURRENCY. The requirement that necessary public facilities and services to maintain the City's adopted level of service standards, as set forth in the City's Comprehensive Plan, when the impacts of Development occur.

CONFINED SPACE RESCUE. Rescue from areas not intended for continual employee occupancy, that have limited means of egress, and have the potential for physical, chemical, or atmospheric engulfment.

CONSTRUCTION. The placement, assembly, erection, substantial repair, alteration or demolition of a Building or Structure on land, the placement of concrete, asphalt, similar materials on land, or grading or earthwork of land.

CONSTRUCTION AND DEMOLITION DEBRIS (Solid Waste). All waste, Garbage, Refuse, and Debris resulting from the Construction or demolition of Buildings, including sand, stone, brick, wood, concrete, or plaster block, paving, Roofing, pipe shingles, Lawn renovating Debris, sod, dead sod, limbs, and Tree stumps.

CONSTRUCTION WASTE (Solid Waste). Refuse generated from Construction, destruction, renovation, repair or alteration of Building and Structures except Debris comprised solely of material generated by excavation, Land Clearing or Tree Removal.

CONSUMPTION OFF THE PREMISES. The selling of beers, wines, etc., in the original unbroken containers to be taken by the purchaser off the Premises where sold before being consumed.

CONSUMPTION ON THE PREMISES. Consumption of all beers, wines, or Alcoholic Beverages of every kind on the Premises where sold, or the right to sell such beverages by the drink or bottle.

CONTAINER (Solid Waste). Any detachable container designed or intended to be mechanically serviced and varying in size from 2 to 40 cubic yards.

CONTROL (Animal Care and Regulation). The regulation of the possession, ownership, care and custody of Animals.

CONVENIENCE BUSINESS. Any place of business that is primarily engaged in the retail sale of groceries, or both groceries and gasoline, and that is open for business at any time between the hours of 11:00 p.m. and 5:00 a.m. The term Convenience Business does not include:

(a) A business that is solely or primarily a Restaurant.

(b) A business that always has at least five employees on the Premises after 11:00 p.m. and before 5:00 a.m.

(c) A business that has at least 10,000 square feet of retail floor space.

(2) The term Convenience Business does not include any business in which the Owner or members of his or her family work between the hours of 11:00 p.m. and 5:00 a.m.

CONVENIENCE STORE. An establishment engaged in the retail sale of food, beverages, and other frequently or recurrently needed items for household use or consumption.

CUL-DE-SAC. Minor Street intersecting another Street at one end and terminating at the other end with a circular vehicular turn-around.

CURFEW (Emergency Management). An order prohibiting or restricting pedestrian and vehicular movement, Standing and/or Parking, during certain designated hours and throughout the entire City or portions thereof.

CUSTOMER

CUSTOMER, COMMERCIAL/OFFICE (Utilities). A non-governmental Customer that is neither a Residential Customer nor an Industrial Customer.

CUSTOMER, INDUSTRIAL (Utilities). A Customer that obtains a Utility service for the purpose of manufacturing, producing, assembling, or processing one or more products, and either the average quantity of service required for that purpose exceeds 25,000 gallons per day, or the type of Sewage generated by that purpose, prior to any Pretreatment, is such that without Pretreatment the conditions of Significant Industrial User, as defined herein, would be applicable.

CUSTOMER, UTILITY (Utilities). The Person responsible for payment of the security deposit and monthly service charges. This shall be either the Owner of the property or an individual or corporate entity authorized by the Owner to open the Utility account.

CUSTOMER, RESIDENTIAL (Utilities). The Owner of property where Utility service is obtained for use in Dwelling Units in which each occupant normally retains control of the unit for at least one month at a time.

CUSTOMER, SOLID WASTE (Solid Waste). Any Person, firm, corporation, Association, or other entity that contracts with a Hauler for the collection and disposal of Solid Waste from any real property located within the City.

DANGEROUS DOG (Animals). Any dog that according to the records of the Broward County Animal Care and Regulation Division or other Animal Control or Law enforcement authority:

(1) Has, when Unprovoked, approached any Person in a menacing fashion or apparent attitude of attack upon the Streets, Sidewalks or any public grounds or places, provided that such actions are attested to in a sworn statement by one or more Persons and dutifully investigated by an Officer; or

(2) Has Severely Injured or killed a domestic Animal while off the Owner's property; or

(3) Has aggressively bitten, attacked or endangered or has inflicted Severe Injury on a human being on public or Private Property; or

(4) Has been used primarily or in part for the purpose of dog fighting or is a dog trained for dog fighting.

DEBRIS. All types of waste, Garbage, Construction and Demolition Debris, Recyclable Materials, Rubbish and Trash.

DETENTION AREA (Engineering Standards). An area designed to delay Stormwater runoff prior to discharge into receiving waters.

DEVELOPER'S AGREEMENT. An agreement between a developer and the City that establishes the developer's responsibility regarding project phasing, the provision of public and private facilities, and improvements and any other mutually agreed to terms and requirements.

DEVELOPMENT. The term has the meaning given in Section 380.04, Florida Statutes.

DEVELOPMENT ORDER. An order authorizing the granting, denying, or granting with conditions of an application for a Development Permit.

DEVELOPMENT PERMIT. This term has the meaning given in Section 163.3164(8), Florida Statutes.

DEVELOPMENT PLAN. A type of plan that becomes part of the zoning for a property that reflects the location of Buildings, easements, Parking arrangements, public access, Street pattern, Landscape, signage and other similar features.

DIAMETER BREAST HEIGHT (DBH) (Tree Preservation). The diameter of the Tree trunk(s) measured at 4 ½ feet above the top of the rootball.

DIRECT CONTROL (Animal Care and Regulation). Immediate, continuous physical control of an Animal at all times, such as by means of a fence, leash, cord or chain of sufficient strength to restrain the Animal.

DISASTER. A natural or human-caused event or occurrence that results in substantial injury or harm to the population or substantial damage to or loss of property.

DISASTER DEBRIS. Vegetative Debris and Structural Debris caused by a Disaster.

DISCHARGE (Hazardous Substances). Any intentional or unintentional act or failure to act that results in the releasing, spilling, pumping, pouring, emitting, emptying, or dumping of a Hazardous Substance, or substantial threat of Discharge, upon any real or personal property located within the City, and which in the determination of the Fire Chief or designee, poses an unreasonable and imminent risk to life, health, safety, or welfare of persons or property within the City.

DISTRIBUTION MAIN (Utilities). Any pipe in a Potable Water system by which Potable Water is carried from the Treatment Plant to one or more water Service Laterals.

DISTRICT, WATER MANAGEMENT. The South Florida Water Management District.

DRAINAGE FACILITIES. A system of water bodies, Structures and pipes designed to collect, convey, hold, divert or discharge Stormwater.

DRIPLINE (Tree Preservation). The peripheral limits of the horizontal crown of a Tree spread vertically to the ground; provided, however, that the same shall not be less than a circle with a five-foot radius measured from the center of the Tree.

DRIPLINE ENCROACHMENT (Tree Preservation). Any activity that has the effect of causing soil compaction, injury to lower limbs, grade change, contamination of soil, or damage to the root system. Specifically, this definition shall include acts such as Parking of vehicles, use of heavy earth moving or grading equipment, placement of Construction materials, excavation and filling, trenching and the exposure of paints, oils, or chemicals within a Tree's Dripline. Specifically excluded from this definition are routine maintenance activities such as mowing or walking within the Tree's Dripline.

DRIVE-THROUGH FACILITY. Any place of business that serves, sells or otherwise makes available its services or products to patrons while they remain in their Motor Vehicle.

DUPLEX. Two Dwelling Units attached by a common party or firewall in one Building.

DWELLING. Any Building or Structure that is wholly or partly used or intended to be used for living and sleeping, including but not limited to houses, Townhouses, condominiums, apartments and mother-in-law units.

DWELLING UNIT. One or more rooms designed, occupied or intended for occupancy as separate living quarters, with only one kitchen plus sleeping and sanitary facilities provided within the unit, for the exclusive use of a Single Family maintaining a household.

ECOLOGICAL COMMUNITY. Any one of the native vegetative plant communities determined pursuant to Chapter 5, Article XII, "Natural Resource Areas," Broward County Code of Ordinances.

EDUCATIONAL INSTITUTION. A Premises or site upon which there is an institution of learning, whether public or private, which conducts regular classes, courses of study, or both, required for accreditation by or membership in the State Department of Education of Florida,

Southern Association of Colleges and Secondary Schools, or the Florida Council of Independent Schools. The term Educational Institution includes a Premises or site upon which there is a day care center, nursery school, pre-kindergarten, Elementary School, middle school, high school; professional institution, or an institution of higher education, including a community college, junior college, or four- year college or university; libraries, art galleries and museums open to the public; or special institution of learning.

EDUCATIONAL INSTITUTIONS (Business Tax). State tax-supported or parochial, church and nonprofit Private Schools, colleges, or universities conducting regular classes and courses of study required for accreditation by or membership in the Southern Association of Colleges and Schools, the Department of Education, or the Florida Council of Independent Schools. Nonprofit libraries, art galleries, and museums open to the public are defined as Educational Institutions and eligible for exemption.

EMERGENCY. An unplanned or unexpected event that requires immediate action in order to prevent or remedy a service outage; or to prevent or remedy a situation that presents an immediate danger to human life, health or safety or a significant loss or damage to property, and where failure to take immediate action would enhance the risk of loss or prolong the delay in restoring service to Customers. Routine repairs and planned refurbishment do not constitute Emergencies.

EMERGENCY PERTAINING TO ACTS OF VIOLENCE. Any act of violence or a flagrant and substantial defiance of, or resistance to, a lawful exercise of public authority and that on account thereof, there is reason to believe that there exists a clear and present danger of a riot or other general widespread disobedience of the Law, and substantial injury to persons or to property, all of which constitute an imminent threat to public peace or order and to the general welfare of the residents and citizens of the City, or parts thereof.

EMERGENCY PERTAINING TO DISASTER. Any occurrence, or threat thereof, whether natural, technological, or manmade, in war or in peace, which results or may result in substantial injury or harm to the population or substantial damage to or loss of property.

EMPLOYEE (Adult Business). A Person who works or performs in an Adult Entertainment Establishment, irrespective of whether the Person is paid a salary or wage by the Owner or manager of the Premises. Employee shall include a person who pays a form of consideration to an Owner or manager of an Establishment for the privilege of working, performing, or exposing his or her Specified Anatomical Areas within the Establishment.

ENCOUNTER STUDIO (Adult Business). All Establishments offering nude encounter sessions, encounter sessions between males and females, nude dance encounter sessions, and sexual consultations.

ENCROACHMENT. The protrusion of a use, plant growth, fill, excavation, Buildings, permanent Structures or Development into a space or area where it is not permitted.

ENFORCEMENT OFFICER. A police Officer, a police service aide, a Code Enforcement Officer, or any other Person designated by Law, or by the City Manager to enforce the Code.

ENGINEER. . A person registered to engage in the practice of engineering under Section 471.001 - 471.037, Florida Statutes and includes the terms "professional Engineer "and "registered Engineer."

ENVIRONMENT. Includes, but is not limited to, ambient air, surface water, land surface, subsurface soil strata, or groundwater.

ENVIRONMENTAL REGULATION. Any federal, State, county, or local Law relating to pollution or protection of the Environment. It includes, but is not limited to, any federal, State, county, or municipal statute or regulation that pertains, in whole or part, to any existing or potential emission, Discharge, or release of any pollutant, contaminant, chemical, toxic waste, hazardous waste, or Solid Waste into the Environment. The term Environmental Regulation also includes, without limitation, any such statute or regulation relating to the manufacture, processing, distribution, use, treatment, storage, disposal, transport, or handling of any pollutant, contaminant, chemical, toxic waste, hazardous waste, or Solid Waste.

ENVIRONMENTALLY SENSITIVE LANDS. Those lands identified and mapped under the 1989 Environmentally Sensitive Lands (ESL) Bond Program that are considered to be ecologically valuable.

EQUIPMENT FACILITY (Telecommunications). A room, cabinet, shelter, pedestal, build-out of an existing Structure, Building, or similar Structure used to house ancillary equipment for a Telecommunications Tower or Antenna. Each such cabinet, shelter, or Building shall be considered a separate Equipment Facility.

ESSENTIAL SERVICES (Telecommunications). Those services provided by the City and other governmental entities that directly relate to the health and safety of its residents, including fire, police and rescue.

ESTABLISHMENT (Adult Business). The Site or Premises on which the Adult Entertainment Establishment is located, including the interior of the Establishment, or portion thereof, upon which certain activities or operations are being conducted for Commercial Gain.

EXCAVATE or ***EXCAVATION.*** To dig into or in any way remove or physically disturb or penetrate any earth or water body.

EXCAVATION WITH BLASTING. The taking of natural materials or deposits from their natural state and location aided by the use of explosive materials or other techniques designed to fracture rock by vibration or compression. Excavation with Blasting shall not mean the taking of natural materials or deposits from their natural state and location by use of digging or scraping machinery.

EXISTING STRUCTURE (Telecommunications). A Structure that exists at the time an application for permission to place an Antenna on a Structure is filed with the City. The term includes any Structure that can structurally support the attachment of an Antenna in compliance with applicable codes.

EXTERIOR LIGHTING. Illumination emanating from any source, including walkways, marquees, and hallways exposed toward the property line.

EXTERMINATION. The control of insects, rodents or vermin or other pests by destroying their nesting places, by removing or making inaccessible those materials that may serve as their food, by poisoning, spraying, fumigating, trapping or by any other approved methods.

EXTRAORDINARY CONDITIONS (Telecommunications). Subsequent to a hurricane, flood, or other natural hazard or subsequent to a defective finding on a previous inspection.

FAÇADE. The entire Building wall, including wall face, Parapet, fascia, windows, doors, canopy, and Roof on any complete elevation.

FIRE FLOW. The rate of flow and pressure necessary to provide an adequate capability to fight a fire.

FISCAL YEAR. The period of time beginning on October 1 of any year and ending September 30 of the following year.

FLAG. A piece of fabric with a color or pattern that represents a government, or other noncommercial organization or idea.

FLORIDA SITE FILE. A comprehensive listing of all recorded cultural resources, including those listed in the National Register, maintained by the Department of State, Division of Historical Resources.

FOOTCANDLE. The amount of illumination provided by one lumen uniformly distributed on one square foot of surface.

FORCE MAIN (Utilities). A pipe in a Sewer System in which flow is caused by the force of one or more pumps.

FORM 1583. The standard application form that the United States Postal Service requires to be completed by renters of mailboxes, which includes personal identification data of the renter including, but not limited to, name, address, date of birth, telephone number, and driver's license number (Domestic Mail Manual, Section 2.0: Delivery to Another).

FRANCHISE (Telecommunications). An initial authorization or renewal of an authorization, regardless of whether the authorization is designated as a Franchise, permit, license, resolution, contract, certificate, agreement, or otherwise, to construct and operate a Cable System or Video Service Provider network facilities in the Public Right-Of-Way.

FRONTAGE. That side of the property line abutting a legally accessible Right-Of-Way. On a corner lot, the Frontage may be designated by the Owner, subject to the approval by the City Manager who will determine whether it is consistent with the orientation of the other lots and improvements on the same side of the accessible Right-Of-Way.

FUEL STATION. A retail place of business engaged in the retail sale of motor fuels and may include accessory activities such as the sale of vehicle accessories or supplies, the lubrication of Motor Vehicles, the minor adjustment or minor repair of Motor Vehicles, the sale of convenience food items, or an accessory Restaurant.

GARBAGE (Solid Waste). Putrescible Animal and vegetable wastes resulting from the handling, preparation, cooking, consumption, decay, and storage of food. The term Garbage shall include combustible waste such as paper, rags, and boxes used in connection with the distribution or storage of food and glasses, bottles, tin cans, or other disposable receptacles of food or food products.

GEOGRAPHIC SEARCH AREA (Telecommunications). That initial circular area that has a radius of no less than one mile designated by a wireless provider or operator for a new Tower. The Geographic Search Area shall be determined based upon engineering considerations including grids, frequency coordination and levels of service consistent with good engineering practices.

GOLF CART. A Motor Vehicle that is designed and manufactured for operation on a golf course for sporting or recreational purposes and that is not capable of exceeding speeds of 20 miles per hour, including vehicles modified to have a cargo platform or bin to transport parcels or a hitch to tow a Trailer.

GOOD STATE OF REPAIR. Fully functioning as originally intended, maintained in accordance with federal, State and local Laws, rules and ordinances, clean, safe and reasonably comfortable for ordinary intended use.

GOVERNMENT PARCEL. A parcel owned by the United States of America or any agency thereof, a sovereign state or nation, the State of Florida or any agency thereof, a county, a special district, school district or a municipal corporation.

GPD (Utilities). Gallons per day.

GRAVITY MAIN (Utilities). A pipe in a Sewer System in which flow is caused by force of gravity.

GREASE TRAPS. Interceptors that collect grease and oil waste from facilities producing greasy wastes.

GROSS SQUARE FOOTAGE (GROSS FLOOR AREA). The sum (in square feet) of the area of each floor level, measured from principal outside faces of exterior walls, including, but not limited to, basements, corridors, hallways, utility areas, elevators, storage rooms, stair cases, mezzanines, areas that are Roofed but not enclosed and all other areas that have floor surfaces with clear standing head room at a minimum of 6 feet, 6 inches.

GROUND COVER. Dense, low-growing plants that substantially cover the ground and generally do not exceed a height of 24 inches at maturity, but not including sod.

GUYED TOWER (Telecommunications). A Telecommunications Tower that is supported, in whole or in part, by guy wires and ground anchors.

HABITABLE ROOM. A fully enclosed space, or portion thereof, intended to be used or usable for living, sleeping, cooking or eating purposes.

HARBOR (Animals). The act of keeping and caring for an Animal or providing Premises to which the Animal returns for food, shelter or care for a period of at least 48 hours. Harbor shall not include circumstances where an individual captures, locates and attempts to find the Animal's Owner in good faith.

HATRACKING (Tree Preservation). To sever the leader or leaders or to Prune a Tree by stubbing of mature wood.

HAULER (Solid Waste). Any Person, firm, corporation, or other entity which is engaged in the business of collecting and/or disposing of Solid Waste.

HAZARDOUS SUBSTANCE OR TECHNICAL RESCUE INCIDENT (Cost Recovery). Any Technical Rescue, Confined Space Rescue, Rope Rescue, High Angle Rescue, aerial rescue, Structural or Trench Collapse Rescue, Hazardous Substance abatement efforts, and other similar incidents occurring within the corporate boundaries of the City, or other jurisdictions where mutual aid services are provided by the City, and which, in the determination of the City Manager, pose an unreasonable and imminent risk to the life, health, safety, or welfare of persons, entities or property within the City.

HAZARDOUS SUBSTANCES. Any substance, material, biological organism, bacterium or virus in a quantity or form which poses an unreasonable and imminent risk to the life, health, safety, or welfare of persons, entities or property within the City, and shall include, but not be limited to, those Hazardous Substances listed in the "N.F.P.A. Guide on Hazardous Materials" or the E.P.A.'s list of extremely Hazardous Substances, or the "Florida Substance List" promulgated by the Department of Labor and Employment Security, or as listed in any other applicable federal, State, or local Laws or regulations.

HAZARDOUS SUBSTANCES COSTS (Cost Recovery). All those necessary and reasonable expenses incurred by the City in connection with investigating, mitigating, minimizing, cleaning, removing, or abating Discharges of Hazardous Substances. Such costs shall include, but are not limited to:

(1) Disposable materials and supplies acquired, consumed, and expended as a result of the Discharge.

(2) Full cost recovery for compensation of City employees for the time devoted specifically to the Discharge.

(3) Rental or leasing of equipment used specifically for the Discharge.

(4) Replacement costs for equipment that is contaminated beyond reuse or repair as a result of the Discharge.

(5) Decontamination of equipment contaminated during the Discharge.

(6) Special technical services specifically required as a result of the Discharge.

(7) Other special services specifically required as a result of the Discharge.

(8) Laboratory costs for purposes of analyzing samples taken during the Discharge.

(9) Costs associated with the services, supplies, and equipment procured for a specific evacuation.

(10) Cost of disposal of any Hazardous Substances.

HEAVY EQUIPMENT (Tree Preservation). Light rubber-wheeled equipment, which shall be a maximum of 48 inches wide, tire to tire, with a maximum weight of 3,500 pounds, which will not damage Tree roots.

HEDGE. A Landscape barrier consisting of a continuous, dense planting of Shrubs installed a minimum height of 24 inches, 24-inch spread and spaced at two feet on center (O.C.). Hedges shall be planted with branches touching so as to create a solid screen with no visual spaces between plants at the time of installation. Plant spacing shall be adjusted according to plant sizes so long as a solid screen is achieved.

HEIGHT (Structure). The vertical distance from the nearest crown of the adjacent road to the highest point of the Structure being measured.

HEIGHT OF SIGN. The vertical distance measured from the nearest crown of the adjacent road to the top of the Sign Face or Sign Structure, whichever is greater.

HIGH ANGLE RESCUE. Rescue from exterior Environments located in greater than a 60° inclination.

HIGH RISE. Three or more attached Dwelling Units in a Building with nine or more residential Stories (exclusive of Parking levels).

HOME OCCUPATION. Any business that is conducted from a Residential Property within the City.

HOMEOWNERS' ASSOCIATION. A Homeowners' Association or Condominium Association as defined in Section 720.301(9) and 718.103(2), Florida Statutes.

HOTEL/MOTEL. an establishment requiring a license by the State of Florida that is used, maintained or advertised as a place where furnished sleeping accommodations are supplied for

short term rent to guests or Tenants with no unit therein occupied by the Owner, same Tenant or group of Tenants in excess of 90 days within any twelve-month period.

HOTEL UNIT. Any Dwelling Unit contained within a Hotel/Motel.

HOUSEHOLD WASTE (Solid Waste). The Rubbish and Garbage ordinarily generated by a Residential Property on a daily basis. This definition excludes waste that requires special handling or management such as discarded appliances, waste tires, used oil, lead-acid batteries, Construction and Demolition Debris, ash residue, yard Trash, biological wastes and hazardous waste as defined in Section 403.703, Florida Statutes.

HURRICANE WATCH. An announcement that hurricane conditions (sustained winds of 74 mph or higher) are possible within the specified coastal area. Because hurricane preparedness activities become difficult once winds reach tropical storm force, the Hurricane Watch is issued 48 hours in advance of the anticipated onset of tropical-storm-force winds.

IMPERVIOUS AREA. An area covered by a material that does not permit infiltration or percolation of water directly into the ground.

INDIVIDUAL PROFESSIONAL ENTITY (Business Tax). Any Business consisting of only one individual who is required to maintain an active and valid state or federal license, permit, or certificate from any state or federal agency or the Florida Bar in order to engage in his or her profession, and which utilizes the address of a separate taxed Business within the City. An individual who is employed by the separate taxed Business is not deemed to be a Business or an Individual Professional Entity.

INSPECTOR. Any Person who is authorized by the City Manager to conduct inspections pursuant to the Code.

INTERESTED PERSON. Any Person who speaks for or against any resolution or ordinance before the City Commission or for or against any matter before any City Advisory Board and who has a direct financial interest in the action (including, but not limited to, vendors, bidders and proposers), except that Owner occupied Residential Property Owners shall not be deemed to have a direct financial interest in land use decisions that may affect the value of their property.

INTERFERENCE (Utilities). A discharge which, alone or in conjunction with a discharge or discharges from other sources, inhibits or disrupts the POTW, its treatment processes or operations, or its sludge processes, use, or disposal; and therefore, is a cause of a violation of the operations permit or of the prevention of Sewage sludge use or disposal in compliance with any of the following statutory/regulatory provisions or permits issued thereunder, or any more stringent State or local regulations: Section 405 of the Act; the Solid Waste Disposal Act, including Title II commonly referred to as the Resource Conservation and Recovery Act (RCRA); any state regulations contained in any state sludge management plan prepared pursuant to Subtitle D of the Solid Waste Disposal Act; the Clean Air Act; the Toxic Substances Control Act; and the Marine Protection, Research, and Sanctuaries Act.

INTERLOCAL AGREEMENT (Solid Waste). That certain Interlocal Agreement dated November 25, 1986, by and among Broward County and the contract communities, as amended or supplemented from time to time pursuant to the provisions of the Interlocal Agreement.

IRRIGATION. A system of piping and sprinkler heads, its use being to convey rust free water to Landscaped areas.

ITDD. The Indian Trace Development District.

LAND CLEARING. The removal of Trees, Shrubs, and/or undergrowth by stripping or any other process, with the intention of preparing real property for non-agricultural Development purposes. This definition shall not include: the selective removal of non-native Tree and Shrub species when the soil is left relatively undisturbed; removal of dead or nuisance Trees; or normal mowing operations.

LANDSCAPE or LANDSCAPING.

(1) Consists of any of the following or a combination thereof: material such as, but not limited to, grass, Ground Covers, sods, decorative rock Mulch, berms, Shrubs, Vines, Hedges, Trees, or palms; but excluding sand, gravel, pavers, or pavement.

LANDSCAPE ARCHITECT. A Person licensed to practice Landscape Architecture under Chapter 481, Part II (Landscape Architecture), Florida Statutes and includes the term ″registered Landscape Architect″.

LAP DANCE, STRADDLE DANCE, FACE DANCE, FRICTION DANCE or ***FLASH DANCE.*** Also known as a Straddle Dance, Face Dance, Friction Dancing, or Flash Dance, shall mean the use by an Employee or independent contractor, whether clothed or partially or totally nude, of a part of his or her body to touch, massage, rub, stroke, caress, or fondle the genital or pubic area of a Person while at the Establishment, or the touching of the genital or pubic area of an Employee or independent contractor by a Person while at the Establishment. It shall be a Lap Dance regardless of whether the "touch" or "touching" occurs while the Employee or independent contractor is displaying or exposing a Specified Anatomical Area. It shall also be a Lap Dance regardless of whether the "touch" or "touching" is direct or through a medium. However, incidental touching shall not constitute Lap Dancing.

LARGE STUMP OR LIMB. A Tree stump or limb with a diameter of at least 24 inches at the widest part.

LAST PASS (Emergency Management). The final removal of Disaster Debris by the City and/or its agents.

LATTICE TOWER (Telecommunications). A Telecommunications Tower that is constructed to be self-supporting by lattice type supports and without the use of guy wires or other supports.

LAW. All duly enacted and applicable federal, State, county, and City Laws, ordinances, codes, rules, regulations, and orders.

LAWN. That portion of a lot or parcel planted with turf/grass, excluding Swales.

LIFT STATION (Utilities). Sewage pumping system designed to service locations where sanitary Sewer gravity flow is not possible without excessive depth or where there is insufficient head for gravity flow through a publically owned treatment system or plant.

LIQUOR. The term has the meaning given in Section 565.01, Florida Statutes.

LITTER. Garbage, Refuse, Rubbish, Trash and Construction and Demolition Debris and all other waste material which, if thrown, deposited or dumped as prohibited in §§ 52.25 et seq., tends to create a danger to public health, safety, and welfare.

LOCAL STREET. A Street having that meaning given in Section 334.03(15), Florida Statutes.

LOGO. A symbol used to identify an entity, product or service.

LOITER or ***LOITERING.*** To stand around or move slowly about, to spend time idly, to saunter, to delay.

LOOSE CONSTRUCTION DEBRIS. Garbage, Construction Waste or Trash left loose or unsecured at a Construction site.

LOOSE CONSTRUCTION MATERIALS (Emergency Management). All Construction materials, including but not limited to loose or unsecured wood, bricks, blocks, metals and tiles, that are placed at a Construction site, and which materials are not being currently used in the Construction at the site.

LOOSE VEGETATIVE DEBRIS. Vegetative Debris made up of small particles, including but not limited to leaves, needles, grass, moss, bark, and Mulch.

LOT. A parcel or tract of land designated and identified as a single unit of area.

LOW INCOME PERSON. One or more natural Persons or a family, not including students, that has a total annual anticipated income for the household that does not exceed 80% of the median annual income, as published by the U.S. Department of Housing and Urban Development, adjusted for family size for the county. While occupying a rental unit, a Low Income Person's annual anticipated gross income may increase to an amount not to exceed 140% of 80% of the applicable median income adjusted for family size.

MAJOR DRIVEWAY. A driveway that provides for a maximum average daily trip volume of 5,000 vehicles and/or a maximum average peak hour volume of 500 vehicles.

MANUFACTURING FACILITY (Business Tax). A Structure or location used primarily for the production or alteration of merchandise or commodities.

MASTER DEVELOPMENT PLAN. A comprehensive Development Plan that includes current and proposed property uses, proposed land Development and zoning criteria, and the layout of design and infrastructure components.

MEDIAN. The area between Roadway Traffic Lanes.

MEDICAL WASTE (Solid Waste). Isolation wastes, infectious agents, human blood and blood products, pathological wastes, sharps, body parts, contaminated bedding, surgical wastes, potentially contaminated laboratory wastes, and dialysis wastes.

MICROWAVE DISH ANTENNA (Telecommunications). A dish-like Antenna used to link Telecommunications sites together by wireless transmission and/or receipt of voice or data.

MOBILE HOME. Has the same meaning given in Section 320.01(2), Florida Statutes and includes only those Mobile Homes in which permanent residential habitation is permitted by applicable land Development regulations.

MOBILE VENDING VEHICLE. Any vehicle, cart, or apparatus, a designated space for which is not shown on an approved site plan, used for the sale, or offer for sale, of goods or services.

MOBILE VENDOR. Any Person engaged in the selling, or offering for sale, of goods or services from a Mobile Vending Vehicle.

MODERATE INCOME PERSON. One or more natural Persons or a family, not including students, that has a total annual anticipated income for the household that does not exceed 120% of the median annual income, as published by the U.S. Department of Housing and Urban Development, adjusted for family size for households within the county. While occupying a rental unit, a Moderate Income Persons annual anticipated gross income may increase to an amount not to exceed 140% of 120% of the applicable median income adjusted for family size.

MODULAR NEWSRACK. A connected grouping of two to six Newsracks within a single unit or Structure.

MONOPOLE TOWER (Telecommunications). A Telecommunications Tower consisting of a single Pole or spire self-supported on a permanent foundation, constructed without guy wires, ground anchors, or other supports.

MULCH. Nonliving organic, arsenic free material customarily used in Landscape design to enrich the soil, control weeds, retard erosion and retain moisture.

NEIGHBORHOOD FACILITY. A facility intended to serve or accommodate the needs of a specific segment of a community or area.

NEWSRACK. A self-service, non-coin-operated or coin-operated box, container, storage unit, pocket, compartment, or other dispenser installed, used, or maintained for the display, sale, or distribution of a particular newspaper or other news periodicals.

NONCOMMERCIAL HANDBILL. Any printed or written matter, any sampler or device, dodger, circular, leaflet, pamphlet, newspaper, magazine, paper, booklet, or any other printed or otherwise reproduced original or copies of any matter of literature, excluding Commercial Handbills.

NONVEHICULAR ACCESS LINE or ***NONVEHICULAR INGRESS AND EGRESS LINE.*** A line illustrated on a Plat that prohibits installation of driveways for regular use by Motor Vehicles.

OATH. An affirmation in all cases in which, by Law, an affirmation may be substituted for an Oath, and in such cases the words Swear and Sworn shall be equivalent to the words Affirm and Affirmed.

OFFICE, BUSINESS OR PROFESSIONAL. An establishment providing executive, management, administrative, or professional services, but not involving medical or dental services or the sale of merchandise, except as an incidental use.

OFFICE, MEDICAL. An establishment where patients, who are not lodged overnight, are examined and/or treated by Persons practicing any form of physical or mental healthcare or therapy, whether such Persons be medical doctors, chiropractors, osteopaths, podiatrists, naturopaths, optometrists, psychologists, therapists, dentists, or any such profession, the practice of which is lawful in the State of Florida.

OFFICER. Any Law Enforcement Officer as defined in Section 943.10, Florida Statutes, any Code Enforcement Officer or any Animal care Officer.

OFF-SITE. Any location outside the property limits.

OFF-STREET LOADING AREA. An area provided for the temporary Parking of trucks being loaded or unloaded that is not within the Public Right-Of-Way.

ON-SITE. Refers to any location within the property limits.

OPERATOR (Adult Businesses). A Person who engages or participates in an activity that is necessary to or that facilitates the operation of an Adult Entertainment Establishment, including but not limited to the licensee, manager, Owner, doorman, bouncer, bartender, dancer, disc jockey, sales clerk, ticket taker, movie projectionist, or supervisor. The term is not meant to include repair people, janitorial personnel or the like who are only indirectly involved in facilitating the operation of the Adult Entertainment Establishment.

OPERATOR (Lodging Establishments). Any Person who, alone or in conjunction with others, has charge or control of a Dwelling or Hotel, or any part of a Dwelling or Hotel.

OUTDOOR. An item shall be considered Outdoors if it is not fully enclosed with four walls and a solid Roof.

OUTPARCEL. A portion of a tract of non-residential land intended to be developed with a free standing Building and accessed from the same entrance from a Public Right-Of-Way as the main tract.

OVERBUILD (Telecommunications). A Cable System constructed to serve Subscribers already served by an existing Cable System.

OVERLASH (Telecommunications). To place an additional Antenna, cable, wire or Communications Facility onto an attachment by a Registrant or Communications Services Provider.

OVERLIFT (Tree Preservation). The removal of the majority of the inner lateral branches and foliage thereby displacing weight and mass to the ends of the branches. The alteration of the Tree's live crown ratio will be considered as evidence of Overlifting.

OVERSIZED FACILITY (Utilities). A pipe or pumping facility that satisfies all of the following:

(1) It is constructed in order to serve a new Development and is located in a subportion of a City Utility system which connects the individual lots of the Development to a portion of the system indicated in the master plan.

(2) The developer has contributed to its Construction, either by constructing it him- or herself or by making total or partial reimbursement of the costs of Construction by others.

(3) The City has determined that adequate service to future nearby Developments will not be possible unless the current facility is constructed larger than would be required to service only the current Development. In determining the size that would be required to service only the current Development, the City utilizes generally accepted design criteria and shall apply all of the provisions of this Chapter, such as required minimums, looped Distribution Mains, Fire Flows, and the like.

OWNER

OWNER. For general purposes, Owner means any Person who alone or jointly with others, has any legal or equitable title or interest, with or without having actual possession thereof.

OWNER. (Notice). For the purpose of providing notice: Owner shall mean the Person or Persons reflected as the property Owner in the most recently certified real property ad valorem Tax Rolls of Broward County, which have been provided to the City by Broward County. Additionally, in the case of multiple or joint ownership, notice to one Owner shall be considered for the purposes herein as notice to all multiple or joint Owners.

OWNER (Land Development and Licenses). For the purpose of applications for Development Permits and licenses: Owner shall mean the actual current title holder of the property and may also include an agent of the Owner who provides written evidence (including, but not limited to, a binding power of attorney), satisfactory to the City Attorney, that he or she has the authority to bind the title holder of the property.

OWNER. (Solid Waste). For purposes of Solid Waste Collection Services Assessment, Owner shall mean the Person reflected as the Owner of Assessed Property on the Tax Roll.

OWNER (Animal). Any natural Person, firm, association or corporation who owns, keeps, Harbors or controls an Animal, and the knowledge and acts of agents and employees of corporations in regard to Animals transported, owned, employed by or in the custody of a corporation shall be held to be the knowledge and act of such corporation. If the Owner is a minor as defined by statute, the minor's parent(s) or legal guardian(s) shall be the Owner.

OWNER (Vehicle or Vessel). The last known record title holder to a vehicle or Vessel according to the records of the Florida Department of Motor Vehicles or the Department of Environmental Protection.

PACKAGE STORE. An establishment that is licensed to sell all Alcoholic Beverages, in sealed containers and for Consumption Off The Premises only.

PAIN MANAGEMENT CLINIC. A type of Medical Office providing a variety of personal services by an On-Site physician who is currently licensed by either the Florida Board of Medicine or Board of Osteopathic Medicine and his or her staff, which, individually or collectively, are intended to reduce or manage pain.

PARAPET. A vertical false front or wall extension above the Roof line.

PARCEL OF LAND. Any quantity of land capable of being described with such definiteness that its location and boundaries may be established, which is designated by its Owner or developer as land to be used or developed as a unit or that has been used or developed as a unit.

PARK (Motor Vehicles). The complete Stopping of a Motor Vehicle under circumstances in which its operator does not remain inside of the vehicle.

PARKING AISLE. The area immediately adjacent to the Motor Vehicle Parking Stalls that permits maneuvering of the Motor Vehicles entering and leaving a Parking Stall, and that connects the Parking Stalls to the driveway.

PARKING STALL. The space that is designated to Park a Motor Vehicle, excluding Parking Aisles and driveways.

PARTS (Motor Vehicles and Vessels). All component Parts of a vehicle or Vessel that are in a state of disassembly, or are assembled with other vehicle or Vessel component Parts, but which, in their state of assembly, do not constitute a complete vehicle or Vessel.

PASS THROUGH (Solid Waste). A discharge that exits the POTW into waters of the United States in quantities or concentrations which, alone or in conjunction with a discharge or discharges from other sources, is a cause of a violation of any requirement of the operations permit, including an increase in the magnitude or duration of a violation.

PAY TELEPHONE. Any self-service telephone operated by coin, credit card or prepaid phone card, available for use by the public. This term includes enclosures, structural support and mounting equipment.

PERFORMANCE BOND. A bond posted to ensure proper and complete Construction and repair of a facility and compliance with the permittee's obligations pursuant to a permit.

PERIMETER BUFFER. A continuous area of land along the perimeter of a Parcel of Land, including Landscaping, berms, walls, fences, and Building Setbacks, that is used to provide a transition between one type of land use and another.

PERSON. Any natural person or entity including, but not limited to, a corporation, a partnership, a sole proprietorship, an estate, a trust, a political subdivision, a public or private agency of any kind, a utility, a successor or assign of any of the foregoing, or any other legal entity.

PERSONAL INVESTMENTS (Business Tax). Investments that exist solely for the benefit of the person or relative(s) of the person managing them, and may not benefit any unrelated third party. If the person or relative of the person managing Personal Investments regularly and substantially participates in the operation of a Business funded by such investments, then such investments shall not be a personal investment, and shall be considered a Business.

PERSONAL WIRELESS SERVICES (Telecommunications). Commercial Mobile Radio Services, unlicensed wireless Services, and common Carrier wireless exchange access services, as defined under federal Law, 47 USC § 332(c)(7)(C), and includes but is not limited to, cellular, personal communication services, specialized mobile radio, enhanced specialized mobile radio, and paging service. Personal Wireless Services shall not be considered as Essential Services, Public Safety Communications, public Utilities or private Utilities.

PERVIOUS AREA. Area maintained in its natural condition or covered by a material that permits infiltration or percolation of water directly into the ground.

PHARMACY. Any business that is required to maintain an active and valid State license or permit from the State of Florida Board of Pharmacy.

PHASED DEVELOPMENT. A Development that is designed, permitted or Platted in distinct, sequential stages to be developed over a specified period of time.

PLACE OF PUBLIC ASSEMBLY. Any area where people assemble, whether publicly or privately owned and maintained. Includes, but is not limited to, public assembly Buildings such as auditoriums, assembly halls, private clubs and fraternal lodges, Community Centers, clubhouses, theaters, and places of worship or other facilities that are used for prayer and assembly by persons of similar beliefs.

PLANNED DEVELOPMENT DISTRICT. An area of land developed as a single entity or in phases for a variety of residential types and non-residential uses which do not correspond in lot size or type of Dwelling, density, lot coverage, and required open space to the regulations established in any of the zoning districts created from time to time under the provisions of the zoning

ordinance enacted by the City Commission. The planned Development shall be in conformity with the Master Development Plan of a PDD.

PLANT UNIT. A numeric measurement to establish planting requirements that can be expressed in various plant types.

PLAT. A map or delineated representation of a subdivision of land(s), being a complete, exact representation of the subdivision and other information in compliance with Chapter 177, Florida Statutes and any applicable local government regulations.

PLUMBING. All or any part of the materials, appurtenances or devices attached to and forming a water, Sewer, gas or waste distribution system, including fixtures and devices used for cooking, washing, drinking, cleaning, fire fighting and mechanical purposes.

POLE. Any Utility, electricity, telephone, power or light Pole, other than any pole owned by the City.

PORTABLE TOILET FACILITIES. A room or booth that can be carried or moved to multiple sites and is only intended for temporary use containing a fixture to receive the elimination of human waste. Portable Toilet Facilities include, but are not limited to, holding tanks, privies, or any other toilet facility that is intended for use on a nonpermanent basis.

POTABLE WATER. Water that is satisfactory for drinking, culinary, and domestic purposes and which meets the quality standards of the Florida Department of Environmental Regulation, Chapter 17-22, Florida Administrative Code.

POTENTIALLY TOXIC MATERIALS. Those materials potentially toxic to human life such as, but not limited to, the following:

(1) Herbicides.

(2) Pesticides.

(3) Chlorine.

(4) Insecticides.

(5) Any material for which an Manufacturer's Safety Data Sheet (MSDS) has been issued.

PRE-EXISTING TOWER (Telecommunications). A Telecommunications Tower for which a Building permit has been properly issued prior to the effective date of Ordinance 2009-03, including permitted Telecommunications Towers that have not yet been constructed so long as such approval is current and not expired.

PREFERRED ZONING DISTRICTS (Telecommunications). The zoning districts within Ordinance 2009-03 in which the City provides a preference for the installation of Wireless Communications Facilities.

PREMISES. A distinct and definite locality or place with metes and bounds or lot and block, as land or land with Buildings thereon; lands and tenements; an estate; the area of land surrounding a Building, and any improvements to the land.

PRETREATMENT (Utilities). Any chemical, biological, or physical treatment (other than use of a Grease Trap) applied to Sewage by a Customer in order to reduce any actual or potential adverse impact upon the Sewer System or public health and safety.

PRINCIPAL BUILDING or STRUCTURE. A Building or Structure that is occupied by, or devoted to, a Principal Use or an addition to an existing principal Building or Structure that is larger than the original existing Building or Structure.

PRINCIPAL STOCKHOLDER (Adult Business). A Person who owns or controls, legally or beneficially, 5% or more of a corporation's capital stock, and includes the officers and directors. If no stockholder of a corporation owns or controls, legally or beneficially, at least 5% of the capital stock, all stockholders shall be considered Principal Stockholders. And, if a corporation is registered with the Security and Exchange Commission, or pursuant to Chapter 517, Florida Statutes, and its stock is for sale to the general public, it shall not be considered to have Principal Stockholders.

PRINCIPAL USE. The primary purpose for which the land or Building is used.

PRIVATE PERFORMANCE (Adult Business). The display or exposure of a Specified Anatomical Area by an Employee at an Adult Entertainment Establishment to a Person other than another employee while the Person is in an area within the Establishment not accessible during such display to all other persons in the Establishment, or while the person is in an area in which the Person is totally or partially screened or partitioned during such display from the view of all Persons within the Establishment.

PRIVATE PREMISES. Any Dwelling, house, Building, or other Structure designed or used either wholly or in part for private residential purposes, whether inhabited or temporarily or continuously uninhabited or vacant, and shall include any yard, grounds, walk, driveway, porch, steps, vestibule, or mailbox belonging or appurtenant to such Dwelling, house, Building, or other Structure.

PRIVATE PROPERTY. All privately owned property that is not classified within the definition of Public Property.

PRIVATE RECEPTACLE. A Litter storage and collection receptacle established for private use and operated in conformity with the Code.

PROPERTY APPRAISER. The Broward County Property Appraiser.

PRUNE (Tree Preservation). The removal or trimming of dead, dying, diseased, weak, or objectionable branches in a manner consistent with the standard established in the definition of Tree Abuse and Chapter 122.

PUBLIC PARK (Public Parks, Recreation and Special Events).

Any property owned by a Public Park, recreation, or playground area or any Building or facility thereon within the City which is owned, leased, managed, or maintained as a Public Park, regardless of whether the area has been formally dedicated to the City for such purpose.

PUBLIC PLACE. Any and all Property, Building, Rights-Of-Way or portions thereof, owned by the City.

PUBLIC PROPERTY. Any governmental entity.

PUBLIC SAFETY COMMUNICATIONS (Telecommunications). Any and all wireless communications to and from police, fire, and other Emergency services operating within the City.

PUBLIC SAFETY PERSONNEL. Includes members of a Police Department, Fire Rescue Services, and other City personnel with responsibility for life or health related emergencies.

PUBLICLY OWNED TREATMENT WORKS (POTW). A "treatment works" as defined by Section 212 of the Act (33 USC 1292) that is owned by the City of Weston or City of Sunrise, Florida. This definition includes any devices or systems used in the collection, storage, treatment, Recycling, and reclamation of Sewage or industrial wastes of a liquid nature and any conveyances which convey Wastewater to a Treatment Plant.

RECONNAISSANCE LEVEL ARCHAEOLOGICAL SURVEY. A cursory archaeological survey generally conducted to identify and map sites and to obtain data on site types and distribution. Field methodology in this type of survey involves surface collection, as well as limited subsurface testing.

RECOVERED MATERIALS (Solid Waste). Metal, paper, glass, plastic, textile, or rubber materials that have known Recycling potential, can be feasibly Recycled, and have been diverted and Source Separated or have been removed from the Solid Waste stream for sale, use, or reuse as raw materials, whether or not the materials require subsequent processing or separation from each other, but does not include materials destined for any use that constitutes disposal. Recovered Materials as described above are not Solid Waste and are limited to those defined below as Recyclable Material.

RECREATIONAL FACILITY. A Building or complex of Buildings where activities relating to organized sports, cultural or other similar activities are conducted or held.

RECYCLABLE MATERIAL (Solid Waste). Those materials that are capable of being Recycled and that would otherwise be processed or disposed of as Solid Waste. Provided they are capable of being Recycled, the City recognizes the following as meeting the definition of Recyclable Materials***:***

(1) Wood - when converted to fuel.

(2) Metal - all types.

(3) Concrete block - to the extent that the certified Recovered Materials dealer converts it to aggregate.

(4) Brick - to the extent that the certified Recovered Materials dealer converts it to aggregate.

(5) Glass - clear, green, and brown.

(6) Plastic - Nos. 1, 2, 3.

(7) Paper - newsprint, office, computer.

(8) Cardboard.

RECYCLABLE WASTE (Solid Waste). Waste that is designated by the City as Recyclable by the Code and that is generated from Single-Family or multi-family residentially zoned areas, and includes materials that have known Recycling potential, can be feasibly Recycled, and have been diverted and source-separated or have been removed from the Solid Waste stream for sale, use, or reuse as raw materials, whether or not the materials require subsequent processing or separation from each other, but does not include materials destined for any use that constitutes disposal. It includes those materials that are capable of being Recycled and that would otherwise be processed or disposed of as Solid Waste. It does not include any material that will be ultimately discarded or disposed.

RECYCLER (Solid Waste). Any Person who engages in the Recycling of Solid Waste or who engages in the collection of Solid Waste for the purpose of Recycling.

RECYCLING (Solid Waste). Any process by which Solid Waste, or materials that would otherwise become Solid Waste, are collected, separated, or processed, and reused or returned to use in the form of raw materials or products.

RECYCLING BIN (Solid Waste). The container(s) provided by the City's designated contractor for the collection of Recyclable Waste for Single-Family residential collection.

RECYCLING CART (Solid Waste). The container(s) provided by the City's designated contractor for the collection of Recyclable Waste for multi-family residential collection.

REFUSE (Solid Waste). All putrescible and nonputrescible Solid Wastes (except body wastes), including Garbage, Rubbish, ashes, Street cleanings, dead Animals, Abandoned automobiles, and solid market and industrial wastes.

REGIONAL TRANSPORTATION NETWORK OR REGIONAL ROAD NETWORK. Those Roadways shown on the Broward County Trafficways Plan promulgated by the Broward County

Planning Council pursuant to Chapter 59-1154, Laws of Florida, and the Broward County Charter, or on the Broward County Long Range Transportation Plan, promulgated by the Broward County Metropolitan Planning Organization, or for which Right-Of-Way has been delineated by the Board of County Commissioners pursuant to Chapter 71-561, Laws of Florida, and the Broward County Charter.

REGISTRANT or FACILITY OWNER (Telecommunications). A Communications Services Provider, Cable or Video Service Provider or other Person that has registered with the City in accordance with the provisions of this Chapter.

RELIGIOUS INSTITUTIONS. Churches and ecclesiastical or denominational organizations or established physical places for worship in this State at which nonprofit religious services and activities are regularly conducted and carried on, and also means church cemeteries.

REPEAT VIOLATION. A violation of a provision of a code or ordinance by a Person who has been previously found through a code enforcement board or any other quasi-judicial or judicial process to have violated or who has admitted violating the same provision within five Years prior to the violation, notwithstanding the violations occur at different locations.

RESERVE STRIP. A piece of land or line on one side of a Street in the control of the Owner of the land on the opposite side of the Street that prevents access to the Street by Development immediately beyond the piece of land or line.

RESERVOIR AREA. An area not on the Public Right-Of-Way that is provided for the temporary use of vehicles waiting to enter or leave a vehicle oriented service, or an off-Street Parking facility.

RESIDENTIAL AREA (Motor Vehicles and Vessels). Any areas zoned primarily or exclusively for Single-Family or multifamily residential use.

RESIDENTIAL PROPERTY. A Parcel of Land whose land use or zoning permits Single Family, Duplex, townhomes and/or multi-family Dwelling Units. Hotels, Motels, Timeshares and Common Areas or community property within a residential community are not included in the definition of Residential Property.

RESIDENTIAL TRASH (Solid Waste). Every waste accumulation of paper, sweepings, dust, rags, bottles, cans, or other material of any kind that is usually attendant to housekeeping.

RESOURCE RECOVERY SYSTEM (Solid Waste). The resource recovery facilities that are constructed, operated, and maintained, or caused to be constructed, operated, and maintained, pursuant to the Interlocal Agreement.

RESPONSIBLE PARTY. One or more Persons or any combination thereof who cause or allow the Discharge of Hazardous Substances that requires action by the Fire Department of the City or its authorized agents in order to protect the public health, safety, or welfare.

RESTAURANT. Any establishment that has more than six indoor seats and serves food for consumption on the Premises.

RESTORATION (Telecommunications). The process by which Rights-Of-Way are returned to a condition as good or better than existed before the Construction.

RETENTION AREA. An area designated to prevent Stormwater runoff from direct discharge into receiving waters.

RIGHT-OF-WAY

IN PUBLIC RIGHTS-OF-WAY or IN THE PUBLIC RIGHTS-OF-WAY (Telecommunications). In, on, over, under or across the Public Rights-Of-Way.

RIGHTS-OF-WAY. The surface and space above and below any real property in which an entity has an interest in Law or equity, whether held in fee, or other estate or interest, or as a trustee, including, but not limited to any Street, boulevard, road, Highway, freeway, lane, alley, court, Sidewalk, parkway, river, tunnel, viaduct, bridge, Public Park, Swale, neutral ground, Median or any other place, area, or real property owned or controlled by the entity.

RIGHT-OF-WAY, PRIVATE. That area privately owned but dedicated and/or used for Street purposes, including but not limited to Roadways, Swales, bike paths, and Sidewalks, by the residents of the community. This definition excludes parking lots and their access roads.

RIGHT-OF-WAY, PUBLIC. All that area dedicated to public use or otherwise owned by a public agency for public Street purposes and shall include, but not be limited to, any public Streets, Roadways, Swales, bike paths, and Sidewalks.

RIGHTS-OF-WAY, PUBLIC. A public Utility Easement, Highway, Street, Sidewalk, alley, bridge, tunnel, pier, waterway, dock, wharf, court, lane, or path, or any other property for which the City is the authority that has jurisdiction and control and may lawfully grant access to such property pursuant to applicable Law, and includes the surface, the air space over the surface and the area below the surface to the extent the City holds a property interest therein. Public Rights-Of-Way shall not include Private Property. Public Rights-Of-Way shall not include any real or personal City property except as described above and shall not include City Buildings, fixtures, Poles, conduits, drainage, facilities or other Structures or improvements, regardless of whether they are situated in the Public Rights-Of-Way.

RIGHT-OF-WAY LINE, PUBLIC. The line where the property meets the Public Right-Of-Way at a public Street or public waterway, provided that this definition shall not include alleys, easements, or other similar dedicated uses.

RIGHT-OF-WAY VENDOR OR SOLICITOR. Any Person who sells or offers for sale any thing or service of any kind, or who seeks any donation of any kind, or who personally hands to or seeks to transmit by hand or receive by hand any thing of any kind, whether or not payment in exchange is required or requested, to any Person who operates or occupies a Motor Vehicle of any kind, which vehicle is engaged in travel on or within any portion of any of the roads designated in

§ 71.10, whether or not such vehicle is temporarily Stopped in the travel lanes of the road. The term shall not apply to any Person who merely holds or displays a Sign lawfully permitted to be displayed by a Person, as long as there is no entry into any portion of the Roadway or its Median.

RIGHT-OF-WAY, ULTIMATE. The area created for public Roadway purposes including all required and necessary dedications, reservations and easements have been made or easements have been granted.

RIGHT-OF-WAY LINE, ULTIMATE. That line that separates the Ultimate Right-Of-Way from the remaining Private Property.

ROADWAY. The portion of a paved Right-Of-Way for vehicular use, and bicycle use within a bicycle lane.

ROOF. The exterior upper covering of a Building.

ROPE RESCUE. Any rescue attempt requiring rope and related equipment to safely gain access to, and remove victims from, a hazardous exterior Environment.

ROUTINE MAINTENANCE (Telecommunications). Maintenance or repair of a Registrant's facilities that does not entail or include any digging, Excavation or Construction in or Restoration of the non-Pervious Areas of City's Rights-Of-Way and that will be completed within one work day. Routine Maintenance shall not include removal of mature plant material. No permit shall be required for Routine Maintenance. However, Persons performing Routine Maintenance shall give prior notice to the City of expected work days and locations.

RUBBISH (Solid Waste). Nonputrescible Solid Waste consisting of both combustible and noncombustible waste, such as paper, wrappings, cigarettes, cardboard, tin cans, yard clippings, leaves, wood, glass, bedding, crockery, and similar materials.

SANITARY SEWAGE (Utilities). That type of Sewage normally originating from Dwelling Units, that is, Sewage generated by bathrooms, preparation and serving of food for family consumption, and laundry in family-size loads. Sewage introduced into the City Sewer System by a Commercial or Industrial Customer shall be considered to be Sanitary Sewage only if its potential as a hazard to public health and safety or as an adverse impact upon the Sewer System and/or the Sewer treatment processes is similar to or less severe than caused by Sewage normally originating from Dwelling Units. The following are some, but not necessarily all, of the criteria that shall be used in identifying Sanitary Sewage. If any one of these criteria is exceeded, then the Sewage in question automatically shall be considered as not being Sanitary Sewage. The potential as a hazard or adverse impact of any characteristic not listed herein shall be determined by the City on a case-by-case basis.

Characteristics Maximum (or Minimum) for Sanitary Sewage (ppm)	
BOD	300
Suspended Solids	300

Grease, Fat, or Oil	100 - Instantaneous; 20 - Daily Average
Chlorine Demand	15
Surfactants (MBAS)	2
Nitrogen, Total	35
Phosphorus, Total	10
Sulfides	0.2
Dissolved Oxygen	Minimum 1 ppm
pH	9.5 Maximum; 5.5 Minimum
Temperature	150°F
Heavy Metals, Phenols, and Other	
Toxic or Poisonous Substances	Zero

SANITARY SEWER FACILITIES (Engineering Standards). Structures or piping systems designed for the collection, transmission, treatment, or disposal of Sewage and includes gravity Sewers, manholes, Lift Stations, Force Mains, interceptors, Treatment Plants and disposal systems.

SCALE TOLERANCE (Commercial Vehicles). The allowable deviation from legal weights established in Section 73.05 of the Code.

SCHOOL

SCHOOL, ELEMENTARY OR SECONDARY. An institution of learning, whether public or private, that conducts regular classes and courses of study required for accreditation as an elementary or Secondary School approved by the Florida Department of Education.

SCHOOL, PRIVATE. An institution and attendant Building(s) used for educational or training purposes that is not operated by the School Board of Broward County and whose major source of funding is not from any governmental agency, including elementary, middle, high, vocational and technical schools.

SCHOOL, PUBLIC. An institution and attendant Building(s) used for educational or training purposes that is operated by the School Board of Broward County or whose major source of funding is from any governmental agency, including elementary, middle, high, charter, vocational and technical schools.

SEASONAL DELIVERY PERSONNEL. Any employees of a licensed commercial delivery service that has at least 10,000 Persons employed in this State.

SECURE. In reference to items, includes fastening down or removing all potentially hazardous objects such as Construction shacks, temporary toilets, Roofing tile, Building materials, Trash, forms, insecure Structures, temporary electric service Poles, furniture, potted plants, ornaments and similar items.

SELF-STORAGE FACILITY. A Structure containing separate, individual and private storage space of various sizes, rented to individual Tenants.

SERVICE CONNECTIONS

SERVICE CONNECTION (Utilities). A Water Service Connection and/or Sewer Service Connection.

SERVICE CONNECTION, SEWER (Utilities). The fitting to which the property Owner's Plumbing is connected, the clean-out and temporary plug, and any markings or devices installed as an aid to locating the Service Connection.

SERVICE CONNECTION, WATER (Utilities). The Utility owned meter box or vault, together with all of its contents, and any valve and valve box installed immediately adjacent to the public side of the meter box or vault.

SERVICE LATERAL (Utilities). A pipe which connects a Service Connection to a water Distribution Main or Sewer main.

SETBACKS

SETBACK, FRONT. The minimum space required between the front of any Structure and its corresponding property line.

SETBACK, REAR. The minimum space required between the rear of any Structure and its corresponding property line.

SETBACK, SIDE. The minimum space required between the side of any Structure and its corresponding property line.

SERVICES/SYSTEM (Telecommunications). Open Video Service or Telecommunications Services or both.

SEVERE INJURY (Animals). Any physical injury to a human being or domestic Animal that results in broken bones, multiple bites, or disfiguring lacerations requiring sutures or reconstructive surgery or as further defined in Section 767.11(3), Florida Statutes.

SEVERE WEATHER. The weather conditions expected or occurring when the appropriate governmental entity gives the following weather notices: tropical storm watch, tropical storm warning, Hurricane Watch or hurricane warning.

SEWAGE (Utilities). Liquid wastes and waterborne Solid Wastes originating from residential, commercial, or industrial establishments, together with such ground water, surface water, or Storm Drainage as may unintentionally enter into the Sewer System.

SEWER or ***SEWER SYSTEM (Utilities).*** A network of Gravity Mains, pump stations, and Force Mains used to transport Sewage from points of origin to a treatment/disposal plant.

SEXUAL VIOLATOR. is any person who has been convicted of any felony sexual offense in any state in the United States at any time, regardless of whether adjudication has been withheld, in which the victim of the offense was less than 16 years of age, as that term was applied and used by the state in which the person was convicted.

SHRUB (Landscaping). A bushy, woody plant usually with several permanent stems, and usually not less than 24 inches upon installation and not over ten feet high at maturity.

SIDEWALK. A concrete or asphalt surface designed primarily for pedestrians.

SIGNS

SIGN. Any device or representation for visual communication that is used for the purpose of bringing the subject thereof to the attention of others, or identifying an establishment, product or service, that is projected onto any surface or into the sky, and that is affixed or attached to Premises, real property, fixtures on real property, or a vehicle.

SIGN, ABANDONED. A Sign for a business or purpose that is no longer present at the Sign location.

SIGN, ANIMATED. A Sign depicting action, motion, light or color changes through electrical or mechanical means.

SIGN, AWNING. A Sign that is mounted on or attached to any awning or canopy.

SIGN, BANNER. A Sign that is not permanently affixed to any Structure, having the characters, letters, illustrations, or ornamentations applied to cloth, paper, or fabric of any kind with only such material for a backing. Banner Signs shall include any animated, rotating, or fluttering devices designated to attract attention.

SIGN, CANOPY. A Sign that is suspended from, attached to, supported from, or forming a part of a canopy.

SIGN, CONSTRUCTION. Any Sign erected and maintained on the Premises temporarily while undergoing Construction by an architect, contractor, developer, finance organization, subcontractor, or materials vendor upon which property such individual is furnishing labor, services, or material.

SIGN, DIRECTIONAL.

(1) A Sign permanently erected or permitted directing an individual to a location of ingress or egress to or from the property.

(2) A Sign permanently erected or permitted identifying a Building or Buildings.

SIGN, DIRECTORY. A Sign listing only the names and/or uses, or locations of more than one Business, activity, or Professional Office conducted within a Building, group of Buildings, or commercial center or office park.

SIGN, ELECTION. A Sign relating to a candidate for political office or a measure scheduled for election.

SIGN, FIXED PROJECTING. A Sign affixed to the exterior wall of a Building or Structure with the Sign Face(s) not parallel to the plane of such wall.

SIGN, FREESTANDING. A Sign supported by a Sign Structure secured in the ground that is wholly independent of any Building, fence, vehicle, or object other than the Sign Structure for support.

SIGN, HANGING. A Sign that hangs down and is supported by or attached to the underside of a canopy, awning, marquee, or extension of a Structure.

SIGN, MENU. A Wall Sign that contains only the Restaurant's complete menu and may include daily specials.

SIGN, MONUMENT. Any Freestanding Sign supported by a solid Structure containing a Sign Face that is supported solely by its own ground-mounted base and that is not attached or affixed in any way to a Building or other Structure.

SIGN, NONCOMMERCIAL. A Sign that does not contain copy that advertises the availability of any merchandise, service, institution, Residential Area, entertainment, or activity.

SIGN, OBSOLETE. A Sign for a Business or purpose that no longer exists.

SIGN, OFF-PREMISES. A Sign identifying, advertising, or directing the public to a Commercial Establishment, merchandise, service, institution, entertainment, or activity which is located, sold, rented, based, produced, manufactured, or taking place at a location other than on the Premises on which the Sign is located. For the purposes of zoning review, an Off-Premise Sign shall constitute a Principal Use of the property on which it is located.

SIGN, PAINTED. A Sign painted directly on any exterior Building wall or door surface, exclusive of window and door glass areas.

SIGN, POLE. A Sign that has a visible pole Structure.

SIGN, PROJECTED. Any image projected onto any surface or into the sky for the purpose of drawing the attention of the public or identifying an establishment, product or service.

SIGN, REAL ESTATE LEASING. A Sign erected by the Owner or his or her agent advertising the Premises or real property upon which the Sign is located for rent or lease.

SIGN, REAL ESTATE SALE. A Sign erected by the Owner or his or her agent advertising the real property upon which the Sign is located for sale.

SIGN, ROOF. A Sign erected over or on, and wholly or partially dependent upon, the Roof of any Building for support, or attached to the Roof in any way.

SIGN, SNIPE. A Sign that is fastened or attached to another Sign.

SIGN, SPECIAL EVENT. A temporary or Banner Sign that carries a message regarding a special event or activity for which a special Public Property event permit, private use permit, special Private Property event permit, or seasonal sales permit is required and has been obtained.

SIGN, PROJECTING. A Sign projecting from the outside wall or walls of any Building that is supported by only one rigid support.

SIGN, TEMPORARY. Any Sign to be displayed for a limited period of time, as specified in Chapter 126.

SIGN, VEHICLE. Any Sign attached, either permanently or temporarily, to any type of vehicle.

SIGN, WALL. Any Sign attached to any exterior Building wall or door surface, exclusive of window and door glass areas, that is parallel to the plane of the wall.

SIGN, WINDOW. Any Sign that is painted on, applied to, attached to or projected upon or within the exterior or interior of a Building glass area, including doors, or located within 15 feet of the interior of a Building glass area, including doors, or any interior illuminated Signs whose identification, message, symbol, insignia, visual representation, Logo-type or any other form that communicates information can be read from off-Premises contiguous property or Public Rights-Of-Way.

SIGN AREA. Sign Area shall be computed by means of the smallest square, circle, rectangle, triangle, or combination of shapes that will encompass the outer limits of the writing, representation, emblem, Logo or other display, together with any material or color forming an integral part of the background of the display or area used to differentiate the Sign from the backdrop against which it is placed. Sign Area shall not include any supporting framework, bracing, or wall when such Structure otherwise meets the regulations of this Code and is incidental to the display itself. Signs comprised of individual elements attached to a Building wall shall be measured as one unit, when the distance between the Sign elements is less than two times the dimension of each element. When the faces of a double-faced Sign are parallel, only one side shall

be counted in computing Sign Area. If the two faces of such double-faced Sign are of unequal area, the larger Sign Face shall be considered the area of the Sign.

SIGN FACE. The part of the Sign that is or can be used to identify, advertise, or communicate information or for visual representation that attracts the attention of the public for any purpose. Sign Face includes any background material, panel, trim, color, and direct or self-illumination used that differentiates the sign from the Building, Structure, backdrop surface, or object upon which or against which it is placed. The Sign Structure shall not be included as a portion of the Sign Face provided that no message, symbol, or any of the aforementioned Sign Face criteria are displayed on or designed as part of the Sign Structure.

SIGN STRUCTURE. A supporting Structure erected or intended for the purpose of identification, with or without a Sign thereon, situated upon or attached to the Premises, upon which any Sign may be fastened, affixed, displayed, or applied; however, this definition shall not include a Building or fence.

SIGNIFICANT INDUSTRIAL USER (Utilities).

(1) A user subject to categorical Pretreatment standards; or

(2) A user that:

(a) Discharges an average of 25,000 GPD or more of process Wastewater to the POTW (excluding sanitary, noncontact cooling, and boiler blowdown Wastewater);

(b) Contributes a process wastestream that makes up 5% or more of the average dry weather hydraulic or organic capacity of the POTW Treatment Plant; or

(c) Is designated as such by the City on the basis that is has a reasonable potential for adversely affecting the POTW's operation or for violating any Pretreatment standard or requirement.

SINGLE-FAMILY. One Dwelling Unit, other than a Mobile Home, sharing no walls with another Dwelling Unit.

SINGLE-FAMILY RESIDENCE. A detached Single-Family home.

SITE ASSESSMENT SURVEY. A systematic archaeological survey utilizing field methodology based on the types of sites known or expected to be present in the survey area. Field methodology in this type of survey involves subsurface testing at depths and intervals sufficient to leave little doubt that all or nearly all sites in the survey were:

(1) Identified;

(2) Bounded horizontally and vertically;

(3) Presented in the resulting report at a level sufficient to permit:

(a) An assessment of National Register eligibility, and

(b) Recommendations of appropriate site treatments; and

(4) Recorded and submitted to the Florida Site File in an acceptance form (i.e., on standard Florida Site File forms with photographic and map attachments).

SOLID WASTE. All waste accumulations consisting of Garbage, Residential/household Trash, Commercial/business Trash, and Construction and Demolition Debris.

SOLID WASTE COLLECTION SERVICES ASSESSED COST. The amount determined by the City Commission to be assessed in any Fiscal Year to fund all or any portion of the cost of the provision of Single-Family residential Solid Waste and Recyclable materials collection, disposal and Recycling services, facilities, or programs.

SOLID WASTE COLLECTION SERVICES ASSESSMENT. A Special Assessment lawfully imposed by the City against Assessed Property to fund all or any portion of the cost of the provision of Single-Family residential Solid Waste and Recyclable Materials collection, disposal and Recycling services, facilities, or programs providing a special benefit to property as a consequence of possessing a logical relationship to the value, use, or characteristics of the Assessed Property.

SOURCE SEPARATED (Solid Waste). The Recovered Materials that are separated from Solid Waste where the Recovered Materials and Solid Waste are generated. The term does not require that various types of Recovered Materials be separated from each other and recognizes de minimis Solid Waste, in accordance with industry standards and practices, may be included with the Recovered Materials. Garbage may not be commingled with Recyclable Material. "De minimis" shall be construed to be less than 5% by volume. Any container that has more than 5% Garbage mixed with Recyclable Material shall be deemed to be Garbage and disposed of accordingly.

SPECIAL MAGISTRATE. The Person appointed by the City Manager to hear code enforcement violation cases.

SPECIFIED ANATOMICAL AREAS (Adult Business).

(1) Less than completely and opaquely covered:

(a) Human genitals, pubic region.

(b) Full anal cleft or cleavage.

(c) That portion of the human female breast encompassed within an area falling below the horizontal line one would have to draw to intersect a point immediately above the top of the areola, including the areola; this definition shall include the entire lower portion of the human female breast, but shall not include a portion of the cleavage of the human female breast exhibited by a dress, blouse, shirt, leotard, bathing suit or other wearing apparel, provided the areola is not so exposed; and

(2) Human male genitals in a discernibly turgid state, even if completely and opaquely covered.

SPECIFIED CRIMINAL ACT (Adult Business).

(1) A violation of Code Section, 86.01 et seq.;

(2) A felony;

(3) An offense under Florida Statutes Chapter 794, (Sexual Battery);

(4) An offense under Florida Statutes Chapter 796, (Prostitution);

(5) An offense under Florida Statutes Chapter 800, (Lewdness; Indecent Exposure);

(6) An offense under Florida Statutes Chapter 826, (Bigamy; Incest);

(7) An offense under Florida Statutes Chapter 847, (Obscene Literature; Profanity);

(8) An offense under Florida Statutes Chapter 831, (Forgery; Counterfeiting);

(9) An offense under Florida Statutes Chapter 837, (Perjury);

(10) An offense under Florida Statutes Chapter 843, (Obstructing Justice);

(11) An offense under Florida Statutes Chapter 849, (Gambling);

(12) An offense under Florida Statutes Chapter 893, (Drug Abuse Prevention and Control);

(13) An offense under Florida Statutes Chapter 895, (Racketeering; Illegal Debts);

(14) An offense under Florida Statutes Chapter 896, (Offenses Related to Financial Transactions); or

(15) An offense under an analogous statute of a state other than Florida, or under an analogous ordinance of another county or city.

SPECIFIED CRIMINAL OFFENSE.

(1) A conviction under Florida Statutes § 60.05, (Nuisance Abatement);

(2) A conviction under Florida Statutes § 480.043, 480.046, 480.047, 480.048, or 480.049, or subsequent regulation;

(3) A conviction under Florida Statutes Chapter 561 (Beverage Law; Administration) or Chapter 562 (Beverage Law; Enforcement); or

(4) A judgment against or conviction under Florida Statutes Chapter 823 (Public Nuisances).

SPECIFIED SEXUAL ACTIVITIES (Adult Business).

(1) Human genitals in a state of sexual stimulation or arousal, or tumescence; or

(2) Acts of human anilingus, bestiality, buggery, cunnilingus, coprophagy, coprophilia, fellatio, flagellation, masochism, masturbation, necrophilia, pederasty, pedophilia, sadism, sadomasochism sexual intercourse, or sodomy; or

(3) Fondling or other erotic touching of human genitals, pubic region, buttock, or female breast; or

(4) Excretory functions as part of or in connection with the activities set forth in subsections (1) - (3) above.

STABLE. A facility where horses are boarded and/or offered for rental.

STAND OR STANDING (Motor Vehicles and Vessels). The halting of a vehicle, for the purpose of, and while actually engaged in, receiving or discharging passengers or goods.

STATE. The State of Florida and its various departments, agencies, and boards.

STATE OF THE ART (Telecommunications). Existing technology where the level of facilities, technical performance, capacity, equipment, components and personal wireless service is equal to that developed and demonstrated to be as technologically advanced and generally available for comparable service areas in South Florida.

STEALTH or STEALTH FACILITY OR TOWER (Telecommunications). Any wireless Telecommunications Facility that is designed to blend into the surrounding Environment. Examples of such facilities include, but are not limited to, architecturally screened Roof mounted Antenna, Building-mounted Antenna, Antenna painted to match the Existing Structure, Antenna integrated into architectural elements, Alternative Tower Structures or other similar Structures.

STOP OR STOPPING (Motor Vehicles and Vessels). Any halting, even momentarily, of a vehicle, except when necessary to avoid conflict with other Traffic or to comply with the direction of a Law Enforcement Officer or Traffic control Sign or signal.

STORM DRAIN or ***STORM DRAINAGE SYSTEM (Utilities).*** A system of conduits, open channels, and/or sloped ground intended to restrict and/or direct the flow of run-off resulting from rainfall. All run-off from any source, including Building Roofs and surfaces, shall be directed to a Storm Drain**.** There shall be no intentional connections between any Storm Drain and any Sewer, and both type systems shall be designed, constructed, and maintained in such a manner as to minimize the likelihood of any unintentional introduction of run-off or ground water into a Sewer, and vice versa.

STORM WATER. (Utilities). The flow of water that results from, and which occurs during and immediately following a rainfall event.

STORY. The portion of a Building that is between one finished floor level and the next higher finished floor level or the Roof.

STREET or ***HIGHWAY.*** A Right-Of-Way for purposes of travel by vehicular means, including the entire area within the Right-Of-Way.

STREET FRONTAGE. The portion of property that is adjacent and parallel to a Public or Private Right-Of-Way used as a thoroughfare by Motor Vehicles.

STRUCTURAL COLLAPSE RESCUE. Those rescues from exterior or interior Environments involving abrupt failure or partial failure of a Structure resulting in the creation of Debris and voids.

STRUCTURAL DEBRIS (Emergency Management). Debris resulting from damage to structural improvements to land, including but not limited to screen enclosures, Roof tiles or shingles, gutters, windows, aluminum siding, bricks, stucco, wood trim, drywall and carpet. This definition excludes floor tiles, appliances, fixtures, furniture and clothing.

STRUCTURE. Anything constructed, assembled, or erected, installed or portable, the use of which requires a location on a Parcel of Land. It includes a movable Structure while it is located on land and which can be used for housing, Business, commercial, industrial, recreational or office purposes, either temporarily or permanently. Structure also includes fences, billboards, swimming pools, poles, pipelines, transmission lines, tracks, and advertising Signs and tennis courts.

STRUCTURE, ANTENNA SUPPORT (Telecommunications). Any Building or other Structure other than a Tower that can be used for the location of Telecommunications Facilities.

SUBSCRIBER (Telecommunications). Any Person, as defined herein, who lawfully receives Cable or Video Services delivered over the Cable or video System. However, notwithstanding anything to the contrary, Subscriber shall not mean any Homeowner or Condominium Association or other bulk purchaser unless mandated by FCC rules.

SUPERMARKET (Business Tax). A self-service retail Business selling primarily food, and may also include accessory Businesses such as a pharmacy, bank or photography lab that are owned by the same taxed Business entity.

SURFACE WATER MANAGEMENT SYSTEM (Utilities). The collection of devices, improvements, or natural systems whereby surface waters are controlled, impounded, or obstructed. The term includes dams, impoundments, reservoirs, and appurtenant works as defined in Section 373.403(1-4), Florida Statutes as well as all artificial Structures including, but not limited to, ditches, canals, conduits, channels, culverts, pipes, and other Construction that conveys, impounds, or controls surface water.

SUSPENDED SOLIDS or ***SS (Utilities).*** Solid particles floating or suspended in a liquid that are removable by laboratory filtration.

SWALE. The area within a Right-Of-Way that lies between the Right-Of-Way Line and the edge of the travel lane of the Roadway.

TABLE, BISTRO. A round table having a diameter not greater than 31 inches, or a square or rectangular table not having a side greater than 27 inches in length.

TABLE, DINING. A round table having a diameter greater than 31 inches, or a square or rectangular table having a side greater than 27 inches in length.

TAX COLLECTOR. The Broward County Tax Collector.

TAX ROLL. The real property ad valorem tax Assessment Roll maintained by the Property Appraiser for the purpose of the levy and collection of ad valorem taxes.

TECHNICAL RESCUE. Those rescues from exterior Environments located in greater than a 40° inclination, or on such rough terrain that the operation requires specific Technical Rescue training.

TECHNICAL RESCUE COSTS (Cost Recovery). Those necessary and reasonable costs, over and above those services normally provided, incurred by the City in connection with responding to, investigating, mitigating, abating, securing, and decontaminating due to a Technical Rescue incident. Such costs include, but are not limited to:

(1) Disposable materials and supplies acquired, consumed, and expended as a result of the incident.

(2) Full cost recovery for compensation of City employees and/or contractors for the time devoted specifically to the incident.

(3) Rental or leasing of equipment used specifically for the incident.

(4) Replacement costs for equipment that is contaminated beyond reuse or repair as a result of the incident.

(5) Decontamination and/or proper disposal of equipment and/or supplies contaminated during the incident.

(6) Special technical services specifically required as a result of the incident.

(7) Other special services specifically required as a result of the incident (e.g., utilities, etc.).

(8) Laboratory costs for purposes of analyzing samples taken during the incident.

(9) Costs associated with the services, supplies, and equipment procured for a specific extrication.

TELECOMMUNICATIONS. The transmission, between or among points specified by the user, of information of the user's choosing, without change in the form or content of the information sent and received.

TELECOMMUNICATIONS FACILITIES. Any cables, wires, lines, wave guides, Antennas, and any other equipment or facilities associated with the direct transmission, retransmission, or reception of Telecommunications which a person seeks to locate or has installed upon or near an Antenna Support Structure which does not use or cross over, under, or through a Public Right-Of-Way.

TENANT. The term has the meaning given in Section 83.43(4), Florida Statutes.

TIMESHARE. A form of ownership or right to the use of a property in which multiple parties hold rights to use the property, with each Owner allotted a specified period of time each Year in which they may use the property.

TOWER or TELECOMMUNICATIONS TOWER. Any Structure, and support thereto, designed and constructed primarily for the purpose of supporting one or more Antennas intended for transmitting or receiving Personal Wireless Services, telephone, radio and similar communication purposes, including alternative Tower Structure, Lattice, Stealth, Monopole, and Guyed Towers. The term includes radio and television transmission Telecommunications Towers, microwave Telecommunications Towers, common-Carrier Telecommunications Towers, and cellular telephone Telecommunications Towers, among others. Poles are only a support Structure and are not a Telecommunications Tower.

TOWNHOUSE. Two or more Dwelling Units attached by a common wall with each unit having two or more Stories.

TRAFFIC. Pedestrians, bicycles and Motor Vehicles, either singularly or together while using any Street or Roadway.

TRAFFIC CONTROL DEVICES. Any Sign, signal, marking or other device used to regulate, warn or guide Traffic placed on, over, or adjacent to a Street, Highway, pedestrian facility or shared use path by authority of the City or other public body having jurisdiction.

TRAFFIC LANE. The portion of the Roadway used for the movement of vehicles but not including the shoulders, bicycle lanes or parking lot drive aisles.

TRAFFICWAY. Any one of the expressways, principal arterials, minor arterials, or collector roads shown on the Broward County Trafficways Plan, promulgated by the Broward County Planning Council or any delineated Trafficway shown on the Broward County Delineated Trafficways Plan.

TRAFFICWAY CORRIDOR. The land area comprised of a Trafficway and its intersections, and that part of any intersecting nontrafficway Street and its intersections that is within either:

(1) Any intersecting nontrafficway collector road that is within 300 feet of the Trafficway as measured along the centerline of the nontrafficway collector from a point opposite the chord; or

(2) Any intersecting Local Street that is within 100 feet of the Trafficway as measured along the centerline of the Local Street from a point opposite the chord.

TRAILER. Any vehicle that carries Persons or property and is pulled, or is designed to be pulled, by a Motor Vehicle.

TRANSACTING COMMERCE (Business Tax). The buying, selling or exchange of merchandise, commodities or services.

TRASH.

(1) Other vegetable waste not included in the term Garbage and wastepaper, straw, excelsior, or other Rubbish and waste not connected with the preparation, distribution, or other Lawn or garden waste.

(2) Debris generated in the normal maintenance of Landscaping (excluding large branches, trunks or stumps of Trees), bottles, cans, boxes, small household appliances and other miscellaneous household Debris.

TREES

TREE. Any living, self-supporting woody perennial plant which at maturity attains a trunk diameter at least 1½ inches or more when measured at a point 4½ feet above ground level and which normally attains an overall height of at least 15 feet, usually with one main stem or trunk and many branches.

TREE, CONIFER. Pine Tree, Cypress Tree, or other cone-bearing seed plant.

TREE, DICOTYLEDONOUS (DICOT). A Tree having a woody stem and branches and leaves with net venation and having a separate, distinct outer bark which can be peeled from the Tree.

TREE, MONOCOTYLEDONOUS (MONOCOT). A palm Tree or a Tree having fronds with parallel venation and no true woody bark with a minimum overall natural height of ten feet at maturity.

TREE, NATIVE. A Tree of a species identified as native to this area by the Association of Florida Native Nurseries incorporated herein by reference. These varieties are recommended for utilization for mitigation of the relocated or removal Tree replacement described in Chapter 122 herein.

TREE, SWALE. Tree planted along improved Rights-Of-Way typically located between the Sidewalk and edge of Roadway.

TREE ABUSE. Any of the following:

(1) Hatracking a Tree.

(2) Pruning that reduces the height or spread of a Tree that has not attained a height or spread of 30 feet.

(3) Cutting upon a Tree which destroys its natural habit of growth.

(4) Pruning that leaves stubs or results in a flush cut; or splitting of limb ends.

(5) Peeling or stripping of bark; or the removal of bark to the extent that if a line is drawn at any height around the circumference of the Tree, over one-third of the length of the line falls on portions of the Tree where bark no longer remains.

(6) The use of climbing spikes, nails, or hooks, except for purposes of total Tree Removal or as specifically permitted by standards set by the American National Standards Institute (ANSI A300).

(7) Pruning that does not conform to standards or recommendations set by the American National Standards Institute (ANSI A300), with the exception of palm pruning, which shall allow no pruning of fronds above the horizontal plan.

(8) Using nails or other piercing devices for the purpose of attaching Signage or any object to a Tree.

(9) Girdling of Trees by guying, staking, support, string trimmers, or non-removal of planting materials from root balls.

(10) Lawn mower or mower deck damage inflicted on any portion of a Tree or palm.

(11) Vehicular damage inflicted causing bark removal, Tree leaning, and/or destruction.

(12) Structures being placed or constructed within or on a Tree.

(13) Utilizing any portion of a Tree as a fence post or similar structural support.

(14) Overlifting a Tree.

(15) Shaping a Tree.

TREE BOND. A certified check or cashier's check made payable to the City in an amount equal to no less than 100% of the estimated cost of installing, maintaining, and warranting the Trees to be removed, relocated, and/or preserved, and providing a guarantee of replacement by the Applicant, to be utilized as part of the site plan approval process for existing Trees on a site plan with relocated Trees denoted for relocation and/or preservation. This shall include Trees whose Dripline may be encroached upon during the Construction of the project or any site where

specimen Trees exist. The guarantee of replacement shall extend for a period of one Year from the approved relocation date. The value shall be submitted by the registered Landscape Architect who prepared the planting plans or a Certified Arborist and approved by the City. The value of the bond shall be based upon a published trade wholesale price list for the DBH replacement value with the appropriate multiplier, representing maintenance (watering contract for three months), installation, warranty, and other planting costs factored in. An initial deposit shall be required, in an amount to be set by resolution, to cover the fee charged for staff review to determine that successful Tree relocation, replacement, and protection has been accomplished. Additional deposits may be required from time to time whenever the account balance approaches zero.

TREE CANOPY. The upper portion of a Tree, consisting of limbs, branches and leaves.

TREE PERMIT. Consists of the application and all necessary information and fees relating to impact to any existing Trees on site

TREE REMOVAL. To permanently remove the trunk or the trunk and root system of a Tree.

TREE SERVICE PROVIDER OR ARBORIST. Any Person who regularly, for compensation or fee, transplants, maintains, removes, Prunes, trims, repairs, injects, or performs surgery on a Tree.

TREE SURVEY. A depiction of a property showing the location, size, botanical name and common name of all Trees thereon.

TRENCHLESS TECHNOLOGY (Telecommunications). The use of directional boring, horizontal drilling and micro-tunneling and other similar techniques in the Construction of underground portions of facilities.

UNDERGROUND FACILITIES (Telecommunications). All lines, cables, conduits, posts, tanks and any other facilities owned or operated by Persons other than the City which are located wholly or primarily underneath or below the surface of Rights-Of-Way. However, City facilities shall be included to the extent required by Section 166.047, Florida Statutes.

UNDERSTORY (Landscaping). The plant life existing under a Tree Canopy including ferns, bushes, and Groundcovers.

UNDEVELOPED LAND. Land upon which there is no Development.

UNDEVELOPED PARCEL. A Parcel of Land upon which there is no Development.

UNIFORM ASSESSMENT COLLECTION ACT. Sections 197.3632 and 197.3635, Florida Statutes or any successor statutes authorizing the collection of non-ad valorem Assessments on the same bill as ad valorem taxes, and any applicable regulations promulgated thereunder.

UNPROVOKED (Animals). The victim who has been conducting himself or herself peacefully and lawfully has been bitten or chased in a menacing fashion or attacked by a dog.

USABLE LAND. Land that has adequate public access and which has been cleared, demucked, and is free from deleterious materials, filled with good granular material (soil/sand) free from deleterious material, and graded to a level six inches above the highest existing or proposed adjacent finished crown of road elevation.

USE. Any purpose or activity for which a Structure or a Parcel of Land is intended, designed, arranged, maintained, or occupied.

USE, COMMERCIAL. An enterprise that provides goods and/or services directly to the consumer, where such services are available on Premises and goods are available for immediate purchase and removal from the Premises by the purchaser.

USE, INSTITUTIONAL. A public or private use that provides a service, whether educational, health, religious, charitable or governmental in character, and is operated by a government, utility, college, tax-exempt or private organization, and/or a Place of Public Assembly. Examples include, but are not limited to: public agency, library, public safety and Emergency services, charitable, essential and Utility services, cultural, service and religious facilities, public/private health facilities or other similar uses.

UTILITY. Any public or private facility used for the provision of services, including, but not limited to, Storm Drainage, sanitary Sewers, electric power, Potable Water, gas service, cable television, fiber optics communication, or telephone line, whether underground or overhead.

VALET AREA. A space approved by the City for the unloading and loading of vehicles associated with a Valet Parking Service.

VALET PARKING OPERATOR. Any Person who is authorized by the City to provide Valet Parking Service.

VALET PARKING SERVICE. The unloading and loading of passengers and storage of their vehicles by an employee or contractor of a business in the City.

VEGETATION, NATIVE (Landscaping). Any plant species that is indigenous to all or a part of the State of Florida. Plant species which have been introduced by humans are not classified as native species.

VEGETATIVE DEBRIS (Emergency Management). Debris resulting from damage to Lawns, plants and Trees, including but not limited to Tree branches and limbs severed, broken or otherwise hanging from the Tree without being on the ground, but excluding Tree stumps or limbs with a diameter of at least 24 inches at the widest part.

VEHICLE, COMMERCIAL.

(1) Any:

(a) Vehicle that permanently or temporarily displays or has affixed to it any marking, Sign, lettering, Logo, picture, symbol, number, or the like, whether alone, or in combination, which identifies or advertises a business or similar commercial venture or use;

(b) Vehicle designed or used for the commercial transportation of persons, goods, or things when such design or use is apparent from a visual inspection of the vehicle (e.g., a vehicle which has seating for more than nine passengers or has attached to it racks, carriers, or holders for the transport of glass, mirrors, pipes, ladders, equipment, or other similar item or materials);

(c) "Bus," "farm tractor," "house Trailer," "maxi-cube vehicle," "pole Trailer," "road tractor," "semitrailer," "special mobile equipment," "tandem Trailer truck," "Trailer," or "truck tractor" as defined by Section 316.003, Florida Statutes;

(d) Vehicle commonly known as a "step van," "wrecker," "tow-truck," "hearse," "ambulance", "taxicab," "well-driller," and any other similar vehicle so constructed, designed, or used;

(e) Vehicle that exceeds eight feet in height from pavement to the highest point on the vehicle (including any appurtenances except Antennas) and 23 feet in length from outside of the front bumper to the outside of the rear bumper; or

(f) Vehicle that, upon visual inspection, bears the effect or remnants of regular commercial use, e.g., spilled paint or concrete overpour in the truckbed or elsewhere on the vehicle, or commercial supplies or equipment left in the vehicle overnight.

(2) This definition does not include passenger or sports utility vehicles owned by government entities and used as police or fire vehicles.

VEHICLE, INOPERATIVE MOTOR. Any Motor Vehicle that cannot move under its own power due to defective or missing Parts, provided, however, that this term does not include vehicles that meet the statutory definition of street rod, ancient, antique, or collectible that are dormant in one location no longer than two months.

VEHICLE, MOTOR. As defined in Section 320.01, Florida Statutes.

VEHICULAR USE AREA. An area used for the loading, circulation, access, storage, or Parking of Motor Vehicles.

VERY LOW INCOME PERSON. One or more natural Persons or a family, not including students, that has a total annual anticipated income for the household that does not exceed 50% of the median annual income, as published by the U.S. Department of Housing and Urban Development, adjusted for family size for households within the county. While occupying a rental unit, a very Low Income Person's annual anticipated gross income may increase to an amount not to exceed 140% of 50% of the applicable median income adjusted for family size.

VESSEL. Any watercraft as defined in Section 327.02, Florida Statutes.

VICIOUS DOG (Animals). Any dog that according to the records of the Broward County Animal Care and Regulation Division or other Animal Control or law enforcement authority:

(1) Has, when Unprovoked, approached any Person in a menacing fashion or apparent attitude of attack upon the Streets, Sidewalks or any public grounds or places, provided that such actions are attested to in a sworn statement by one or more Persons and dutifully investigated by an Officer; or

(2) Has Severely Injured or killed a domestic Animal while off the Owner's property; or

(3) Has aggressively bitten, attacked or endangered or has inflicted Severe Injury on a human being on Public or Private Property; or

(4) Has been used primarily or in part for the purpose of dog fighting or is a dog trained for dog fighting.

VIDEO CHANNEL or ***CHANNEL (Telecommunications).*** A portion of the electromagnetic frequency spectrum that is used in a Cable System and which is capable of delivering a television Channel, including the associated audio signal, as television Channel is defined by the FCC by regulation or otherwise.

VIDEO PROGRAMMING (Telecommunications). Programming provided by, or generally considered comparable to programming provided by, a television station as set forth in 47 USC § 522(20).

VIDEO SERVICE (Telecommunications). Video Programming Services, including Cable Services, provided through wireline facilities located at least in part in the Public Rights-Of-Way without regard to delivery technology, including Internet protocol technology. This definition does not include any Video Programming provided by a commercial mobile service provided as defined in 47 USC § 332(d), Video Programming provided as part of, and via a service that enables end users to access content, information, electronic mail, or other services offered over the public internet.

VIDEO SERVICE PROVIDER (Telecommunications). An entity providing Video Service.

VILLA. Two or more Dwelling Units attached by a common wall in a Building not exceeding one Story.

VINE (Landscaping). Any plant with a long, slender stem(s) that trails or creeps on the ground or climbs by winding itself on a support.

VIOLATOR. The Person responsible for the Code violation which, in the appropriate circumstances, shall be the perpetrator of the violation, the Owner of the real property or personal property, or the Person legally responsible for the property upon which the violation occurred.

WAREHOUSE. A Structure or location used primarily for the storage, transfer or distribution of merchandise or commodities.

WASTEWATER (Utilities). The combination of liquid and water-carried pollutants from residences, commercial Buildings, industrial plants and institutions together with any groundwater, surface runoff or leachate that may be present.

WASTEWATER TREATMENT PLANT or ***TREATMENT PLANT (Utilities).*** That portion of the POTW which is designed to provide treatment of municipal Sewage and industrial waste.

WATER RESOURCE (Utilities). Any and all water on or beneath the surface of the ground, including natural or artificial water courses, lakes, ponds, or diffused surface water, and water percolating, standing or flowing beneath the surface of the ground.

WATER SHORTAGE CONDITION (Utilities). When sufficient water is not available to meet present or anticipated needs of Persons using the Water Resource, or when conditions are such as to require temporary reduction in total water usage within a particular area to protect the Water Resource from serious harm. A water shortage usually occurs due to drought.

WATER SHORTAGE EMERGENCY (Utilities). That situation when the powers which can be exercised under Part II of Chapter 40E-21, Florida Administrative Code, are not sufficient to protect the public health, safety or welfare, or the health of Animals, fish or aquatic life, or a public water supply, or commercial, industrial, agricultural, recreational or other reasonable uses.

WETLANDS. As defined in F.A.C. 40E-4.201(44).

WHIP ANTENNA (Telecommunications). A cylindrical Antenna that transmits signals in 360 degrees.

WILD ANIMAL. Any Animal classified as wildlife by the Florida Fish and Wildlife Conservation Commission, pursuant to the Florida Administrative Code, Title 68 and Chapter 372, Florida Statutes.

WIRELESS COMMUNICATIONS FACILITY (Telecommunications). Any equipment or facility used to provide Personal Wireless Service and may include, but is not limited to, Antennas, Towers, Equipment Facilities, cabling, Antenna brackets, and other such equipment. Placing a Wireless Communications Facility on an existing Structure does not cause the existing Structure to become a Wireless Communications Facility. It also means Personal Wireless Services facilities, as defined under federal Law, 47 USC § 332(c)(7)(C), and includes, but is not limited to, Antennas and radio-transmitting Telecommunications Towers, and associated facilities used to transmit Telecommunications Signals. Poles are only a support Structure and are not a Wireless Communications Facility. An open video System is not a Wireless Communications Facility to the extent that it provides Video Services; a Cable System is not a Wireless Communications Facility to the extent that it provides Cable Service.

YEAR. A calendar year, unless otherwise expressed.

CHAPTER 2. RULES FOR INTERPRETATION AND CONSTRUCTION.

§ 2.01 TITLE OF CODE.

This codification of ordinances by and for the City of Weston shall be designated as the City of Weston Code ("the Code") and may be so cited.

§ 2.02 INTERPRETATION.

Unless otherwise provided herein, or by Law or implication required, the same rules of construction, definition, and application shall govern the interpretation of this Code as those governing the interpretation of State Law.

§ 2.03 APPLICATION OF CODE TO CITY.

Unless the Code expressly provides otherwise, the provisions of this Code shall not apply to the City, property owned by the City or to City employees, contractors and/or authorized agents in their official capacity while conducting official City business.

§ 2.04 APPLICATION TO FUTURE ORDINANCES.

All provisions of Title I compatible with future legislation shall apply to ordinances hereafter adopted amending or supplementing this Code unless otherwise specifically provided.

§2.05 AMENDMENTS TO CITED LAW, CONTRACTS AND OTHER PUBLICATIONS.

Code references to outdated and/or amended applicable Federal, State and local Laws, contracts, City policies and procedures, and other cited publications shall be interpreted and applied to include the current Federal, State and local Law, contract, policy, procedure or publication, as may be amended or renumbered from time to time.

§ 2.06 SPECIAL ZONING DISTRICT REGULATIONS.

For the US Nature and Culture Center, Weston Town Center, Estates of Swan Lake, Isles of Weston and Weston Commons special zoning districts, additional property standards are set forth in the Zoning Chapter for special zoning districts. If regulations set forth in the Zoning Chapter for the US Nature and Culture Center, Weston Town Center, Estates of Swan Lake, Isles of Weston and Weston Commons special zoning districts are inconsistent with regulations in other Chapters of the Code, the special zoning district regulations in the Zoning Chapter shall govern to the extent of such conflict.

§ 2.07 SEVERABILITY.

Should any section, paragraph, sentence, clause, phrase or other part of this Code be declared by a court of competent jurisdiction to be invalid, such decision shall not affect the validity of this Code as a whole or any portion thereof, other than the part so declared to be invalid.

§ 2.08 REFERENCE TO OFFICES.

Reference to a public office or officer shall be deemed to apply to any office, officer, or employee of this municipality exercising the powers, duties, or functions contemplated in the provision, irrespective of any transfer of functions or change in the official title of the functionary.

§ 2.09 REFERENCE TO CITY MANAGER.

When the Code requires an act to be performed by the City Manager that, by Law, may be performed by an agent or designee of the City, the requirement may be satisfied by the performance of such act by an agent or designee if authorized by the City Manager.

§ 2.10 ERRORS AND OMISSIONS.

If an error is discovered, consisting of the misspelling of any words; the improper capitalization of defined terms; the omission of any word or words necessary to express the intention of the provisions affected; the use of a word or words to which no meaning can be attached; or the use of a word or words when another word or words was clearly intended to express such intent, then the City Manager and City Attorney jointly may correct such error, and the provisions shall have the same effect as though the correct words were contained in the text as originally published.

§ 2.11 TIME COMPUTATION.

The time within which an act is to be done, as herein provided, shall be computed by excluding the first day and including the last. All time periods shall be based upon calendar days unless otherwise specified. If the last day of a time period falls on a Saturday, Sunday, or a legal holiday, the time period shall be extended to the next day that is not a Saturday, Sunday or legal holiday.

§ 2.12 REPEAL OR MODIFICATION OF ORDINANCES.

2.12 (A) Whenever any ordinance or part of an ordinance shall be repealed or modified by a subsequent ordinance, the ordinance or part of an ordinance thus repealed or modified shall continue in force until the effective date of the ordinance repealing or modifying it, unless otherwise expressly provided.

2.12 (B) When any ordinance repealing a former ordinance, clause, or provision shall be itself repealed, the repeal shall not be construed to revive the former ordinance, clause, or provision, unless it is expressly provided.

§ 2.13 SECTION HISTORIES; STATUTORY REFERENCES.

2.13 (A) As histories for the Code sections, the specific number and passage date of the original ordinance, and the amending ordinances, if any, are listed following the text of the Code section.

Example: (Ord. 10, passed 5-13-60; Am. Ord. 15, passed 1-1-70; Am. Ord. 20, passed 1-1-80; Am. Ord. 25, passed 1-1-85)

2.13 (B)(1)If a statutory cite is included in the history, this indicates that the text of the Section reads substantially the same as the statute and should be deemed to include any amendments thereto.

Example: (Florida Statutes § 943.14(4)) (Ord. 10, passed 1-17-80; Am. Ord. 20, passed 1-1-85)

2.13 (B)(2) If a statutory cite is set forth as a "statutory reference" following the text of the Section, this indicates that the reader should refer to that statute for further information.

Example:

Statutory reference:

For provisions concerning the inspection of public records, see Florida Statutes § 119.01 et seq.

§ 2.14 BONDS.

All bonds provided to the City shall be in a type and form acceptable to the City Manager and City Attorney, except as otherwise provided herein. The City shall pay no interest, earned or otherwise, on cash bonds during the time that the City holds them.

§ 2.15 PERMIT, LICENSE AND APPROVAL LIMITATIONS.

2.15 (A) ***Limitations.*** The issuance or granting of a permit, license or approval shall not be deemed or construed as an approval of a violation of any of the provisions of the City Code. No permit, license or approval presuming to give the authority to violate or cancel the provisions of these regulations shall be valid unless supported by a variance. Nor shall such permit, license or approval prevent the enforcing Officer from thereafter requiring the correction of errors in said plans and specifications or from preventing Building operations being carried on thereunder when in violation of these regulations.

2.15 (B) ***Suspension and revocation.*** The City Manager may suspend or revoke, in writing, a permit, license or approval issued under provisions of this Code, whenever the permit, license or approval is issued on the basis of a misstatement of fact or fraud. The written suspension or revocation shall describe the appeal process. The notice of the suspension or revocation shall be sent by certified mail, return receipt requested. Any Person having an interest in the permit, license or approval may appeal the suspension or revocation to the City Commission, by filing a written notice of appeal with the City Clerk within 15 days after receipt of the written notice of suspension or revocation.

§ 2.16 LEGAL ACTIONS.

2.16 (A) ***Quasi-judicial decisions of the City Commission.*** Any Person claiming to be injured or aggrieved by any final action of the City Commission acting in its quasi-judicial capacity may present to the circuit court of the county a petition for writ of certiorari to review such final action as provided by Law. Such petition shall be presented to such court within 30 days after the date of such final action by the City. No act, other than the issuance of, or refusal to issue, a Development Order by the City Commission, is intended to be a final City action under this Chapter for the purpose of judicial review of quasi-judicial decisions.

2.16 (B) ***Legislative decisions of the City Commission***. Any Person claiming to be injured or aggrieved by any final action of the City Commission acting in its legislative capacity may seek review of such final action as provided by law.

2.16 (C) ***Decisions of the City Manager.*** Except for decisions of the City Manager under Section 3.03(a) of the City Charter, no decision of the City Manager shall constitute final action of the City. Unless otherwise provided for in this Code, any Person claiming to be injured or aggrieved by any such decision of the City Manager shall first appeal such decision to the City Commission. Written notice of such appeal must be filed with the City Manager within 10 days of the date of the decision to be appealed. The standard of review for such appeals to the City Commission shall be *de novo*.

§ 2.17 PROCEDURES FOR RELIEF FROM SPECIFIED LAWS.

2.17 (A) ***Application***. A request for relief under this Section shall be required prior to any Person filing a lawsuit based upon federal Law; Chapter 761, Florida Statutes ("Religious Freedom Restoration Act of 1998"); Chapter 760, Florida Statutes (“Florida Civil Rights Act of 1992”); or the Florida Constitution. The request for relief shall be filed with the City Manager on a form provided by the City. The form shall contain such questions and requests for information as are necessary for evaluating the relief requested.

2.17 (B) ***Notice***. Upon receiving a request for relief pursuant to the Section, the City shall display a notice in the City's public notice bulletin board. The notice shall advise the public that a request for relief under this Section is pending. The location, date and time of the applicable public hearing shall be included in the notice.

2.17 (C) ***Application and hearing***. The City Commission shall hold a public hearing within 75 days of the City determining that the application is complete, unless such timeframe is extended by the Person requesting relief. The City Commission, after a public hearing, may: (a) grant the relief requested; (b) grant a portion of the request and deny a portion of the request, or impose conditions upon the grant of the request; or (c) deny the request.

2.17 (D) ***Criteria***. In determining whether the relief request shall be granted or denied, the Applicant shall have the burden to establish:

2.17 (D)(1) The Applicant is a potential claimant under federal Law; Chapter 761, Florida Statutes ("Religious Freedom Restoration Act of 1998"); Chapter 760, Florida Statutes (“Florida Civil Rights Act of 1992”); or the Florida Constitution; and

2.17 (D)(2) The Applicant believes in good faith, as stated in his or her request, that the City through implementation of its Code has intentionally or unintentionally violated a federal Law; Chapter 761, Florida Statutes ("Religious Freedom Restoration Act of 1998"); Chapter 760, Florida Statutes ("Florida Civil Rights Act of 1992"); or the Florida Constitution; and

2.17 (D)(3) The Applicant satisfies the required legal standard for bringing such a lawsuit as set forth in the applicable Law, or legal precedent interpreting the applicable Law.

2.17 (E) ***Exhaustion required***. Completion of the relief procedures shall be a supplement to and not a substitute for any other pre-litigation dispute resolution processes available by Law to the City or the Person. Completion of the relief procedures shall constitute the exhaustion of all administrative remedies available from the City.

2.17 (F) ***Effect while pending***. While an application for relief or appeal of a determination of same is pending before the City, the City will not enforce the subject Code, rules, policies, and procedures, except the City may seek injunctive relief if an imminent threat to the health, safety and welfare of the public is present.

§ 2.18 SCHEDULE OF FEES.

The City Commission is authorized to establish and revise, by Resolution, a Schedule of Fees that includes all charges, fees and deposits required by the City.

§2.99. GENERAL PENALTY.

2.99 (A) Except as otherwise provided herein, it shall be unlawful for any person to violate or fail to comply with any provision of this Code, and where no specific penalty is provided in this Code, the violation of any provision of this Code shall be punishable by a fine not exceeding $1,000 per day per violation for a first violation, $5,000 per day per violation for a Repeat Violation, and up to $15,000 per violation if the violation is deemed to be irreparable or irreversible in nature; or imprisonment for a term not exceeding 60 days, or by both fine and imprisonment, provided, however, that no penalty shall be imposed that is greater than the penalty imposed by State statutes regulating similar conduct.

2.99 (B) The trial court, in its discretion, may in any case (including cases when adjudication is withheld) also assess the court costs, place a defendant on probation in accordance with Florida Statutes, Chapter 948, order a defendant to pay restitution in accordance with Florida Statutes § 775.089, or order the defendant to complete community service hours in an amount not to exceed 250 hours per violation, or both, or impose any other lawful condition, term, or order. In lieu of such participation, the court may permit a defendant to pay $20 to the City for each hour of community service work otherwise required.

2.99 (C) Each day any violation of any provision of this Code shall continue shall constitute a separate offense.

2.99 (D) The City may take any other action permitted by Law to enforce this Code.

TITLE II: LEGISLATIVE

CHAPTER 20. CITY COMMISSION.

§ 20.01 CITY COMMISSION; REIMBURSEMENT OF TRAVEL EXPENSES.

20.01 (A) ***Reimbursements.*** The Mayor and City Commissioners shall be reimbursed for their own reasonable travel expenses incurred in connection with City business related travel outside of the City. The Mayor and City Commissioners shall not be reimbursed for travel within the City.

20.01 (A)(1) ***Meals.*** The City shall reimburse the Mayor and City Commissioners for actual expenses of meals incurred in connection with overnight travel.

20.01 (A)(2) ***Lodging.*** The City shall reimburse the Mayor and City Commissioner for actual expenses relating to lodging.

20.01 (A)(3) ***Ground transportation and airfare.*** The City shall reimburse the Mayor and City Commissioners for actual expenses relating to ground transportation, including but not limited to train, bus, taxi fares and airfare.

20.01 (A)(4) ***Incidental travel related expenses.*** The City shall reimburse the Mayor and City Commissioners for incidental travel related expenses, including but not limited to valet services, parking, roadway tolls and gratuities.

20.01 (A)(5) ***Private vehicle.*** Mileage for use of the Mayor and City Commissioners' own vehicle will be paid at the maximum non-taxable rate allowed by the Internal Revenue Service. If two or more members of the City Commission travel in one private vehicle, the Person supplying the vehicle shall receive the transportation reimbursement.

20.01 (B) ***Filing of expense form; proof of expenditures.*** Within 60 days after incurring expenditure, the Mayor or City Commissioner shall file with the City Manager a signed travel expense form setting forth the reasonable expenses incurred for which City payment is sought. The form shall contain a statement that the expenses were actually incurred by the Mayor or City Commissioner as necessary travel expenses in the performance of official duties and shall be verified by a written declaration that it is true and correct as to every material matter. Whoever receives an allowance or reimbursement by means of a false claim shall be liable in the amount of the overpayment for the reimbursement of the fund from which the claim was paid. Original receipts documenting each expense must accompany the form, except for reasonable and customary out-of-pocket expenses, such as tolls, valet services, gratuities and mileage. If a travel expense form has not been filed within 60 days after incurring an expenditure, the City shall not reimburse such expenses.

§ 20.10 LOCAL PLANNING AGENCY.

20.10 (A) The City Commission of the City of Weston is designated the Local Planning Agency (LPA) for the City.

20.10 (B) The LPA shall have all powers authorized under Florida Statutes § 163.3174.

20.10 (C) The City Commission, in their position as members of the LPA, shall receive no additional compensation.

20.10 (D) A representative of the School Board of Broward County shall be entitled to sit as a non-voting member of the LPA. Such School Board representative shall not be counted when determining the presence of a quorum, nor shall the School Board representative be entitled to any compensation for service on the LPA.

CHAPTER 21. ELECTIONS.

§ 21.01 QUALIFICATION OF CANDIDATES.

The time and manner for qualification of candidates for election to the office of Commissioner or Mayor shall be as follows:

21.01 (A) ***Time for qualification.*** Candidates shall qualify to file to run for the office of Commissioner or Mayor as follows:

21.01 (A)(1) ***Regular election.*** For all regular elections: the qualifying period for candidates to file shall begin at noon on the first regular business day in September, and shall end at noon on the seventh day following the first regular business day in September of the Year in which the election is to be held.

21.01 (A)(2) ***Special elections.*** In circumstances in which a vacancy on the City Commission in the office of Mayor or City Commissioner is filled by special election, the qualifying period for candidates to file shall begin at noon on the first Monday after the adoption of a City Commission resolution calling the special election, or if it shall be a legal holiday, on the first regular business day thereafter, and shall end at noon on the fifth regular business day thereafter.

21.01 (B) ***Manner of qualification.***

21.01 (B)(1) For regular and special elections, as provided by subsections (A)(1) and (2) above, it shall be the duty of any Person desiring to become a candidate for election to the office of Mayor or Commissioner to (a) file a written notice of candidacy in the form set forth in subsection (C) below, (b) present their voter registration card indicating an address of the candidate's place of abode for inspection by the City Clerk or designated City official, (c) present their Florida driver's license (or, if the Person does not possess a driver's license, an official Florida state identification) that reflects the address of such place of abode, as required by Section 2.07 of the City Charter, for inspection by the City Clerk or designated City official (d) pay the qualification fee required by Section 2.04 of the City Charter, and (e) pay the additional election assessment imposed by State statute [Florida Statutes § 99.093].

21.01 (B)(2) Candidates must meet the applicable residency qualifications provided by Sections 2.03(b), 2.04, 2.05(c)(5) and 2.07 of the City Charter.

21.01 (B)(3) The place of qualification shall be the office of the City Clerk and the hours and dates of qualifying shall be the applicable time period set forth in subsection (A)(1) or (2) above.

21.01 (C) ***Notice of candidacy.*** The form of notice of candidacy shall be as follows:

I,_____, currently reside in the City and the Residential Area for which election is being sought. At all times during the prior twelve months, I have resided, and have had the intent to permanently reside, in the City and the Residential Area for which election is being

sought. I am a registered voter in the City of Weston. My residence address is _____, Weston, Florida,_____. I hereby announce my candidacy for the office of (Commissioner, Seat No.) (Mayor) [cross-out inapplicable provision] to be voted for at the election to be held on the_____day of_____, _____. I hereby agree to obey all the laws relating to my candidacy and to serve if elected.

_____
Signature of Candidate

Sworn to and subscribed before me this_____day of_____, _____, at Broward County, Florida.

_____
Notary Public or City Clerk

DATE AND HOUR OF FILING:

_____
RECEIVED BY:

/s/

CITY CLERK/ELECTION OFFICIAL

§ 21.02 EXPEDITING FILING OF COPIES OF MAILED CANDIDATE CAMPAIGN REPORTS.

In addition to the candidate campaign report filing requirements set forth in Florida Statutes § 106.07, a candidate for Mayor or City Commissioner that elects to file by U.S. Mail a campaign report due within ten days of an election, shall deliver a copy of the campaign report to the City Clerk on or before 5:00 p.m. of the day by which the campaign report is required to be mailed.

CHAPTER 22. BUSINESS RELATIONSHIPS.

22.01 DISCLOSURE OF BUSINESS RELATIONSHIPS.

22.01 (A) ***Time of disclosure.*** Except as prohibited by law or regulatory standards, each member of the City Commission or any City Advisory Board shall disclose the existence of any Business Relationship of which he/she is aware that he/she has, or has had within the prior 24 month period, with any Applicant or interested Person, at the time that the Applicant or Interested Person appears before the City Commission or City Advisory Board.

22.01 (B) ***Disclosure subsequent to action taken.*** Except as prohibited by law or regulatory standards, if a member of the City Commission or any City Advisory Board learns, within 30 days after an action is taken by the City Commission or the City Advisory Board, that he/she had a Business Relationship with any Applicant or Interested Person who appeared before the City Commission or the City Advisory Board, he/she shall disclose any such Business Relationship in writing to the City Clerk that was not disclosed at the initial meeting.

22.01 (C) ***Establishment of Business Relationship after appearance.*** Except as prohibited by law or regulatory standards, if a member of the City Commission or any City Advisory Board establishes a Business Relationship with any Applicant or Interested Person within 12 months after the Applicant or Interested Person appears before the City Commission or the City Advisory Board, the member of the City Commission or the City Advisory Board shall disclose any such Business Relationship in writing to the City Clerk.

22.01 (D) ***Prohibition from voting.*** Florida Statutes § 112.3143 establishes specific situations under which City Commissioners and members of a City Advisory Board are prohibited from voting. In those situations where a member of the City Commission or a City Advisory Board is prohibited from voting, that Person shall also be prohibited from participating in any discussion regarding the matter.

22.01 (E) ***Abstention.*** Florida Statutes § 286.012 prohibits a member of the City Commission or any City Advisory Board from abstaining from voting unless there is, or appears to be, a possible conflict of interest under Florida Statutes. In any situation where a member of the City Commission or a City Advisory Board discloses a Business Relationship under this Section, the member may abstain because of the appearance of a possible conflict of interest.

22.01 (F) ***Failure to disclose.*** If any member of the City Commission or City Advisory Board believes that another member has willfully failed to make a disclosure required under this Section, he/she may submit evidence supporting the alleged failure to disclose to the City Manager who shall place the item on the next available City Commission Agenda. The allegation and supporting evidence shall be presented by the member of the City Commission or City Advisory Board who raised the issue for consideration by the City Commission. The member of the City Commission or City Advisory Board against whom the allegation is made may present evidence refuting the allegations. If three or more members of the City Commission determine that an accused City Commissioner willfully failed to make a required disclosure, the accused City Commissioner shall be deemed to be censured. If three or more members of the City Commission determine that an accused member of a City Advisory Board has willfully failed to make a required disclosure, the accused board member shall be removed from the Advisory Board.

CHAPTER 23. NAMING OF PUBLIC PLACES AND RECOGNITION OF COMMUNITY CONTRIBUTIONS.

§ 23.01 NAMING OF PUBLIC PLACES.

The City Commission shall not name Public Places after people or entities, but may establish a commemorative program and/or public memorial.

§ 23.02 PROCEDURES FOR SOLICITATION OF FUNDS FOR MUNICIPAL PURPOSES.

No individuals, organizations or entities shall solicit funds or in kind goods or services for City purposes, or use the City's name for any solicitation, unless prior City Commission approval is obtained. The City Commission may condition such approval as it deems appropriate. In order to obtain City Commission approval, application shall be made to the City Manager on a form provided by the City Manager.

CHAPTER 24. SPECIAL DISTRICTS.

§ 24.01 INDIAN TRACE DEVELOPMENT DISTRICT.

24.01 (A)(1) ***Creation of District.*** Pursuant to Florida Statutes § 189.4041, the Indian Trace Development District is hereby created as a dependent special district of the City, which shall have all the rights, powers, and authority of Florida Statutes, Chapter 190.

24.01 (A)(2) ***Boundaries.*** The Indian Trace Development District is comprised of and includes those lands described as follows:

Portions of Sections 34, 35, and 36 in Township 49 South, Range 39 East, together with a portion of Section 31, Township 49 South, Range 40 East together with portions of Sections 3, 10, 15, 22, 25, 26 and 27 and all of Sections 1, 2, 11, 12, 13, 14, 23 and 24 in Township 50 South, Range 39 East, together with portions of Sections 6, 7, 8, 29 and 30 and all of Sections 17, 18, 19 and 20 in Township 50 South, Range 40 East, all in Broward County, Florida, and being more particularly described as follows:

BEGINNING at the intersection of the East line of said Section 29, Township 50 South, Range 40 East, with the North Right-Of-Way line of South Florida Water Management District Canal C-11, also known as the South New River Canal;

THENCE Westerly, along said North Right-Of-Way line of Canal C-11, to the intersection with the Easterly Right-Of-Way line of State Road 25, also known as U.S. 27 and shown on Florida Department of Transportation Right-Of-Way Maps for Section 86060-2515;

THENCE Northerly, along said Easterly Right-Of-Way line of State Road 25 (U.S. 27), to the intersection with the Southerly Right-Of-Way line of State Road 93 (Interstate 75) as shown on Florida Department of Transportation Right-Of-Way Map for Section 86075-2409;

THENCE Southeasterly, along said Southerly Right-Of-Way line of State Road 93, to the intersection with the West line of BONAVENTURE, according to the Plat thereof as recorded in Plat Book 82, page 43 of the Public records of Broward County, Florida;

THENCE Southerly, along said West line of BONAVENTURE, to the North one-quarter (N ¼) corner of said Section 7, Township 50 South, Range 40 East;

THENCE continue Southerly, along said West line of BONAVENTURE according to the Plat and the East line of that certain Boundary Line Agreement recorded in Official Records Book 10343, Page 593 of the Public Records of Broward County, Florida, to the Northeast corner of a parcel of land described in Quit-Claim deed recorded in Official Records Book 10343, Page 602 of the Public Records of Broward County, Florida;

THENCE Westerly, along the North line of said parcel of land, to the Northwest corner of said parcel of land;

THENCE Southerly, along the West line of said parcel of land, to the Southwest corner of said parcel of land;

THENCE Easterly, along the South line of said parcel of land, to the Southeast corner of said parcel of land, said corner being located on said West line of BONAVENTURE according to the Plat and the East line of that certain Boundary Line Agreement recorded in Official Records Book 10343, Page 593 of the Public Records of Broward County, Florida;

THENCE Southerly, along said West line of BONAVENTURE and said East line of said Boundary Line Agreement, to the Southwest corner of said BONAVENTURE;

THENCE Easterly, along the South line of said BONAVENTURE and the North line of said Boundary Line Agreement, to the Southeast corner of said BONAVENTURE;

THENCE continue Easterly, along the Easterly extension of said South line of BONAVENTURE, to the East one-quarter (E ¼) corner of said Section 8, Township 50 South, Range
40 East;

THENCE Southerly along the East line of said Section 8, to the Southeast corner of said Section 8 and the Northeast corner of said Section 17, Township 50 South, Range 40 East;

THENCE continue Southerly, along the East line of said Section 17, to the Southeast corner of said Section 17 and the Northeast corner of said Section 20, Township 50 South, Range 40 East;

THENCE continue Southerly, along the East line of said Section 20, to the Southeast corner of said Section 20 and the Northeast corner of said Section 29, Township 50 South, Range 40 East;

THENCE continue Southerly, along the East line of said Section 29, to the POINT OF BEGINNING;

LESS THEREFROM:

All of that portion of Tract 38, FLORIDA FRUIT LANDS COMPANY'S SUBDIVISION NO. 1, in Section 3, Township 50 South, Range 39 East, according to the Plat thereof as recorded in Plat Book 2, Page 17 of the Public Records of Dade County, Florida, lying East of the Easterly Right-Of-Way line of State Road 25 (also known as U.S. 27) as shown on Florida Department of Transportation Right-Of-Way Map for Section 86060-2515;

Said lands lying in Broward County, Florida.

24.01 (A)(3) ***Purpose, Powers, Functions and Duties.*** Pursuant to Florida Statutes, Chapters 189 and 190, the Indian Trace Development District is formed for the purpose of exercising those rights, powers and authority contained in Florida Statutes, Chapter 190 and as provided herein in the above described lands and to that end shall possess all the powers to do all things reasonably necessary to provide such services. In addition to all powers

specified herein, the Board shall have all powers necessary or incidental to exercising the purposes of the District, including those powers granted to the governing board of a community development district pursuant to Florida Statutes, Chapter 190 (the "Act"). Without limiting the generality of the foregoing, such powers shall include those specified in § 190.011 and 190.012 (other than § 190.012 (2) (b), (c) and (f)) of the Act, which sections are hereby incorporated and shall be applicable to the District as if set forth herein at length. For all purposes hereof, the provisions of § 190.014, 190.015, 190.016, 190.017, 190.021, 190.022, 190.023, 190.024, 190.025, 190.026, 190.031, 190.035, 190.036, and 190.041 of the Act are hereby incorporated herein and shall be applicable to the District as if set forth herein at length; provided, however that (i) all references in said sections of the Act to the "Act" or applicable sections thereof shall be deemed to refer to this section and the applicable sections hereof which incorporate such provisions of the Act; (ii) all references in said sections to the "board" shall mean the Board of the District; (iii) all references in said sections to "district" shall mean the District; and (iv) the provisions of § 190.013 and 190.015 (12) of the Act shall be discretionary rather than mandatory. To the extent necessary, useful or appropriate to effectuate the provisions hereof, the definitions set forth in § 190.003 of the Act are incorporated herein and made applicable to the District and its activities. All provisions of the Act referred to herein are available for inspection at the City Clerk's Office.

24.01 (A)(4) ***Governing Body.*** The Indian Trace Development District is formed as a dependent special district pursuant to Florida Statutes § 189.403(2)(a) and the governing body of the Indian Trace Development District shall be ex-officio the City Commission of the City of Weston, Broward County, Florida. Commission members shall receive no additional compensation for service as members of the governing body. The Mayor shall serve as chair of the governing body.

24.01 (A)(5) ***Management.*** Management of the Indian Trace Development District shall be by the City Manager. Management's duties shall be to administer the activities of the District in accordance with established policies of the City Commission.

24.01 (A)(6) ***Clerk.*** The functions of clerk for the Indian Trace Development District shall be carried out by the City Clerk.

24.01 (A)(7) ***Attorney.*** The functions of attorney for the Indian Trace Development District shall be carried out by the City Attorney.

24.01 (A)(8) ***Explanation of why a dependent special district is the best alternative.*** Pursuant to Florida Statutes § 189.4041(4)(d), the Indian Trace Development District is formed as a dependent special district because the City desires to have the City Commission serve as the governing body of the Indian Trace Development District, in order to enhance coordination and consistency of policy between the City and the District.

24.01 (A)(9) ***Financial disclosure, noticing and reporting requirements.*** The financial disclosure, noticing and reporting requirements applicable to the governing body and management of the District shall be the same as those required by the position of commissioner and staff Person of the City, respectively.

24.01 (A)(10) ***Methods of finance.*** The District shall be financed in accordance with Chapters 189 and 190, Florida Statutes, and by any other methods of finance the District is empowered to use.

24.01 (A)(11) ***Consistency with the Comprehensive Plan.*** The creation of the District is hereby found and declared to be consistent with the approved comprehensive plan of the City.

24.01 (B)(1) ***Declaration of authority.*** The City Commission finds that the City, through its dependent special district, the Indian Trace Development District, can provide services to the residents of Indian Trace as efficiently as the Indian Trace Community Development District, at a level of quality equal to that delivered by the Indian Trace Community Development District's Board of Supervisors, and at a cost equal to the actual cost for which the Indian Trace Community Development District's Board of Supervisors will have to charge Indian Trace Community Development District users for the provisions of similar services.

24.01 (B)(2) ***Adoption of plan of transfer.*** The City approved and adopted the plan of transfer of the Indian Trace Community Development District.

24.01 (B)(3) ***Transfer.*** Florida Statutes, Chapter 190 having been fully satisfied and addressed, the City declared, in its sole discretion and pursuant to Florida Statutes § 190.046(4) and applicable legal authority, its election to transfer to the Indian Trace Development District, a dependent special district of the City, all powers, rights, duties, functions, and obligations of the District, in accordance with the plan of transfer.

§ 24.02 BONAVENTURE DEVELOPMENT DISTRICT.

24.02 (A) ***Creation of district.*** Pursuant to Florida Statutes § 189.4041, the Bonaventure Development District is hereby created as a dependent special district of the City.

24.02 (B) ***Boundaries.*** The Bonaventure Development District is comprised of and includes those lands described as follows, said lands lying in Broward County, Florida:

A portion of Section 31, Township 49 South, Range 40 East together with portions of Sections 5, 6, 7 and 8, in Township 50 South, Range 40 East, all in Broward County, Florida and being more particularly described as follows:

COMMENCE at the Northwest corner of Parcel "A" of NEW RIVER ESTATES SECTION SIX, according to the plat thereof as recorded in Plat Book 116, Page 37 of the Public Records of Broward County, Florida, said point also being the Point of Beginning of a parcel of land described in City of Weston Ordinance No. 98-27 also known as the "de-annexation parcel," said point being located on the arc of a curve concave to the Southwest, a radial line through said point bears North 23°50€32€East from the radius point of the next described curve;

THENCE Northwesterly on the South Right-Of-Way line of Interstate 75 as shown on Florida Department of Transportation Right-Of-Way Maps for Section 86075-2409, the North line of said parcel described in City of Weston Ordinance No. 98-27 and the arc of said curve having a radius

of 7565.44 feet, a central angle of 00°2449 for an arc distance of 54.60 feet to the intersection with a line 50.00 feet west of and parallel with the East line of said Section 5, said point being the POINT OF BEGINNING of this description;

THENCE Southerly on the West line of said parcel of land described in City of Weston Ordinance No. 98-27 the following five (5) courses and distances;

24.02 (B)(1). South 00°03'06" East on the last described parallel line, a distance of 2059.78 feet;

24.02 (B)(2). South 49°18'10" West, a distance of 1.63 feet;

24.02 (B)(3). South 89°56'54" West, on the Easterly extension of the North Right-Of-Way line of Blatt Boulevard, as shown on the plat of BONAVENTURE, according to the plat thereof as recorded in Plat Book 82, Page 43 of the Public Records of Broward County, Florida, a distance of 48.76 feet to the intersection with a line located 100.00 feet West of and parallel with said East line of Section 5;

24.02 (B)(4). South 00°03'06" East on the last described parallel line 1020.13 feet to the intersection with a line located 100.00 feet West of and parallel with the East line of said Section 8;

24.02 (B)(5). South 00°07'42" East on the last described parallel line, to the Southeast corner of said plat of BONAVENTURE;

THENCE Westerly, along the South line of said BONAVENTURE and the North line of that certain Boundary Line Agreement recorded in Official Book 10343, Page 593 of the Public Records of Broward County, Florida, to the Southwest corner of said BONAVENTURE;

THENCE Northerly, along the West line of said BONAVENTURE and the East line of said Boundary Line Agreement, to the Southeast corner of that certain parcel of land described in Quit-Claim Deed recorded in Official Records Book 10343, Page 602 of the Public Records of Broward County, Florida;

THENCE Westerly, along the South line of said parcel, to the Southwest corner of said parcel;

THENCE Northerly, along the West line of said parcel, to the Northwest corner of said parcel;

THENCE Easterly, along the North line of said parcel, to the Northeast corner of said parcel, said corner being located on the said West line of BONAVENTURE and the East line of said Boundary Line Agreement recorded in Official Records Book 10343, Page 593 of the Public Records of Broward County, Florida;

THENCE Northerly, along said West line of BONAVENTURE and the East line of said Boundary Line Agreement, to the North one-quarter (N ¼) corner of said Section 7, Township 50 South, Range 40 East;

THENCE continue Northerly along said West line of BONAVENTURE to the intersection with said South Right-Of-Way line of State Road 93 (interstate 75) as shown on Florida Department of Transportation Right-Of-Way Maps for Section 86075-2409;

THENCE Southeasterly, along said South Right-Of-Way Line, to the POINT OF BEGINNING.

24.02 (C) ***Purpose; powers; functions and duties.*** Pursuant to Florida Statutes, Chapters 189 and 190, the Bonaventure Development District is formed for the purpose of exercising all those rights, powers, and authority provided herein in the above-described lands and to that end shall possess all the powers to do all things reasonably necessary to provide such services. In addition to all powers specified herein, the Board shall have all powers necessary or incidental to exercising the purposes of the District, including those powers granted to the governing board of a community development district pursuant to Florida Statutes Chapter 190 (the "Act"). Without limiting the generality of the foregoing, such powers shall include those specified in §§ 190.011 and 190.012 (other than §§ 190.012 (2) (b), (c) and (f)) of the Act, which sections are hereby incorporated and shall be applicable to the District as if set forth herein at length. For all purposes hereof, the provisions of §§ 190.014, 190.015, 190.016, 190.017, 190.021, 190.022, 190.023, 190.024, 190.025, 190.026, 190.031, 190.035, 190.036, and 190.041 of the Act are hereby incorporated herein and shall be applicable to the District as if set forth herein at length; provided, however that (i) all references in said sections of the Act to the "Act" or applicable sections thereof shall be deemed to refer to this section and the applicable sections hereof which incorporate such provisions of the Act; (ii) all references in said sections to the "board" shall mean the Board of the District; (iii) all references in said sections to "district" shall mean the District; and (iv) the provisions of §§ 190.013 and 190.016 (12) of the Act shall be discretionary rather than mandatory. To the extent necessary, useful or appropriate to effectuate the provisions hereof, the definitions set forth in § 190.003 of the Act are incorporated herein and made applicable to the District and its activities. All provisions of the Act referred to herein are available for inspection at the offices of the City Clerk.

24.02 (D) ***Governing body.*** The Bonaventure Development District is formed as a dependent special district pursuant to Florida Statutes § 189.403(2)(a) and the governing body of the Bonaventure Development District shall be ex-officio the City Commission of the City of Weston. Commission members shall receive no additional compensation for service as members of the governing body. The Mayor shall serve as chair of the governing body.

24.02 (E) ***Management.*** Management of the Bonaventure Development District shall be by the City Manager. Management's duties shall be to administer the activities of the District in accordance with established policies of the City Commission.

24.02 (F) ***Clerk.*** The functions of clerk for the Bonaventure Development District shall be carried out by the City Clerk.

24.02 (G) ***Attorney.*** The functions of attorney for the Bonaventure Development District shall be carried out by the City Attorney.

24.02 (H) ***Explanation of why a dependent special district is the best alternative.*** Pursuant to Florida Statutes § 189.4041(4)(d), the Bonaventure Development District is formed as a dependent special district because the City desires to have the City Commission serve as the governing body of the Bonaventure Development District, in order to enhance coordination and consistency of policy between the City and the District.

24.02 (I) ***Financial disclosure, noticing and reporting requirements.*** The financial disclosure, noticing and reporting requirements applicable to the governing body and management of the District shall be the same as those required by the position of commissioner and staff Person of the City, respectively.

24.02 (J) ***Methods of finance.*** The District shall be financed in accordance with Chapters 189 and 190, Florida Statutes, and by any other methods of finance the District is empowered to use.

24.02 (K) ***Consistency with the Comprehensive Plan.*** The creation of the District is hereby found and declared to be consistent with the approved comprehensive plan of the City.

TITLE III: EXECUTIVE

CHAPTER 30. CITY MANAGEMENT.

§ 30.01 ADMINISTRATIVE POLICIES.

The City Manager is authorized to establish, promulgate and enforce administrative policies.

§ 30.02 OFFICIAL SEAL.

The official seal of the City, is as follows:

Any use of the City seal by unauthorized Persons shall constitute a second degree misdemeanor pursuant to Section 165.043, Florida Statutes.

§ 30.03. ALTERATION OF CITY DOCUMENTS PROHIBITED.

It is unlawful to alter any original City document, including but not limited to licenses, permits, receipts and certificates, after it is issued by the City. In the event a City document is altered, the original City document shall be rendered null and void and a new application and payment of the applicable fee shall be required to obtain a replacement.

§ 30.04. PUBLIC RECORDS.

Pursuant to and subject to the limitations and exemptions set forth in Chapter 119, Florida Statutes, the City shall make available public records to any Person for inspection or copying. In the event that the City determines that a public records request will require extensive use of information technology resources, will require extensive clerical or supervisory assistance, or copies of records, the City shall require an advanced deposit equal to the City's good faith estimate of actual costs and payment of all outstanding fees and charges related to previous public records requests made by the same Person, prior to commencing research, compilation and/or copying of public records. If the actual cost incurred exceeds the deposit, the City shall not charge the difference between the actual costs and the deposit. If the actual cost incurred is less than the deposit, the City shall refund the difference between the deposit and the actual costs. Additional public records requests shall be subject to additional deposits. Federal, State and local governmental entities shall be exempt from the requirements set forth in this Section.

CHAPTER 31. CODE ENFORCEMENT.

§ 31.01 ESTABLISHMENT OF CODE ENFORCEMENT SYSTEM.

31.01 (A) ***Alternative code enforcement system.*** The City, by this Chapter, hereby adopts an alternate code enforcement system, which shall provide for:

31.01 (A)(1) A Special Magistrate with the authority to hold hearings and assess fines against Violators of the City Code; or

31.01 (A)(2) The supplemental code enforcement procedures authorized by Florida Statutes §§ 162.21 et seq.

31.01 (B) ***Implementation of Chapter 162, Florida Statutes.*** The City, by this Chapter, hereby implements the procedures set forth in Florida Statutes, Chapter 162 in its entirety.

§ 31.02 PURPOSE AND INTENT.

It is the intent of this Chapter to promote, protect, and improve the health, safety, and welfare of the citizens of the City by authorizing the creation of the position of Special Magistrate for code enforcement proceedings with the authority to impose administrative fines and other non-criminal penalties in addition to the implementation of supplemental code enforcement procedures provided for in Florida Statutes § 162.21 in order to provide an equitable, expeditious, effective, and inexpensive method of enforcing any codes and ordinances in force in the City where a pending or repeat violation exists.

§ 31.03 JURISDICTION.

The Special Magistrate shall have jurisdiction to:

31.03 (A) Hear and rule upon those matters that may be prosecuted by municipalities pursuant to Florida Statutes, Chapter 162;

31.03 (B) Hear and rule upon violations of the City Code that authorize violations to be heard by the Special Magistrate.

§ 31.04 SPECIAL MAGISTRATE.

31.04 (A) ***Qualifications and appointment.*** The qualifications and appointment of the Special Magistrate shall be as follows:

31.04 (A)(1) The Special Magistrate shall be appointed by the City Manager and shall serve with compensation as established by the City Commission upon appointment.

31.04 (A)(2) The Special Magistrate must be either a Florida registered architect, a Florida registered engineer, or an attorney who is a member in good standing of the Florida Bar.

31.04 (A)(3) The Special Magistrate shall be bound by the Code of Judicial Conduct.

31.04 (B) ***Rules and regulations.*** The rules and regulations as found in Florida Statutes Chapter 162 shall be adopted by the Special Magistrate. The Special Magistrate may adopt additional rules and regulations as are consistent with the provisions of Florida Statutes Chapter 162, which the Magistrate finds necessary to carry out the provisions of this Chapter, subject to the approval of the City Commission.

§ 31.05 SPECIAL MAGISTRATE CLERK.

The City Manager may appoint an individual to be the Special Magistrate Clerk, who shall perform the functions assigned to the Special Magistrate Clerk as set forth in this Chapter.

§ 31.06 CODE PROSECUTOR.

31.06 (A) ***City Attorney representation.*** The City Attorney may represent the interests of the City and act as Code Prosecutor.

31.06 (B) ***Prosecutorial discretion.*** The Code Prosecutor shall have prosecutorial discretion, including but not limited to, the right to negotiate a plea with the violator and present that plea to the Special Magistrate for approval, to recommend the disposition of a case to the Special Magistrate, and to decline to prosecute a case, similar to the discretion exercised by the State Attorney in criminal cases.

§ 31.07 CODE ENFORCEMENT OFFICERS.

31.07 (A) ***Municipal Code.*** Code Enforcement Officers shall have the authority to enforce the City Code commensurate with the Special Magistrate's jurisdiction set forth in § 31.03, and may initiate enforcement proceedings before the Special Magistrate. The Special Magistrate shall not have the power to initiate such enforcement proceedings.

31.07 (B) ***Building Code, Minimum Housing and Unsafe Structures.*** The Building Official, or qualified designee, shall have all the powers and duties set forth in §31.07(A), and shall have the exclusive authority to enforce the City's Minimum Housing and Unsafe Structures Chapters. The Building Official shall advise the City of violations of the Unsafe Structures Chapter that present serious and immediate threats to the life, health or safety of occupants of Structures or Premises or the public, and shall recommend, upon the identification of violations that present serious and immediate threats, actions that the City may take to mitigate or eliminate these violations and/or threats. The Building Official may act as the City's agent for any purpose set forth in these Chapters.

§ 31.08 REQUIRED METHOD OF NOTICE.

31.08 (A) ***Section 162.12, Florida Statutes.*** Notice shall be provided as set forth in Florida Statutes § 162.12.

31.08 (B) ***Minimum Housing and/or Unsafe Structures Chapters.*** When notice is required to enforce the Minimum Housing and/or Unsafe Structures Chapters, such notice shall be:

31.08 (B)(1) Sent by certified mail to the record Owner(s) listed in the records of the Broward County Property Appraiser;

31.08 (B)(2) Addressed to "Occupant" and sent by U.S. Mail to the address of the Structure or Premises; and

31.08 (B)(3) Posted in a conspicuous place on the Structure or Premises.

§ 31.09 CODE ENFORCEMENT INSPECTIONS.

31.09 (A) ***Authorization to inspect.*** When a Code Enforcement Officer has reasonable suspicion that a Structure or Premises is in violation of the City Code, the Code Enforcement Officer is authorized and empowered to inspect, enter, examine and survey the Structure or Premises for the purpose of enforcing the City Code. Inspection, entrance, examination and survey of Structures or Premises shall be conducted during reasonable hours.

31.09 (B) ***Identification procedures.*** Code Enforcement Officers shall carry credentials sufficient to identify the Officer as a Code Enforcement Officer of the City. Upon initial and all subsequent visits to Structures or Premises, the Code Enforcement Officer shall present and allow examination of these credentials upon initial contact with persons at the property and on demand during the visit to the Structure or Premises.

31.09 (C) ***Inspection protocol.*** Code Enforcement Officers shall comply with the following procedures when seeking authority to inspect portions of Structures or Premises not visible from Public Property or from Private Rights-Of-Way.

31.09 (C)(1) Code Enforcement Officers shall seek consent to inspect the Structure or Premises from a Person over the age of 18 who has common authority over the Structure, Premises or property on their initial and all subsequent visits.

31.09 (C)(2) In the event a Person over the age of 18 who has common authority over a Structure or Premises shall not consent to immediate inspection of the Structure or Premises, that Person shall be given the opportunity to reschedule such inspection for a date and time certain within ten days of the Officer's initial visit.

31.09 (C)(3) The City may seek a search warrant for the Structure or Premises, as provided in subsection (D) of this Section, if:

31.09 (C)(3)(a) The Person who scheduled the inspection in accordance with subsection (C)(2) of this Section refuses to consent to inspection of the Structure or Premises at the scheduled time;

31.09 (C)(3)(b) The Person who scheduled the inspection in accordance with subsection (C)(2) of this Section is not at the Structure or Premises at the scheduled time; or

31.09 (C)(3)(c) The Code Enforcement Officer has gotten no response to repeated attempts to contact the property Owner and/or the Persons in possession of the Structure or Premises.

31.09 (C)(4) In the event a Structure or Premises appears to be unoccupied or vacant and the Owner cannot be contacted in order to obtain consent to inspect the Structure or Premises, the Officer then may enter any open portion of the Structure or Premises in order to conduct an inspection.

31.09 (D) ***Obtaining a search warrant.*** The City shall seek a search warrant as follows.

31.09 (D)(1) When a Code Enforcement Officer believes, based upon reliable evidence, that it is more likely than not that a specific Structure or Premises is in violation of the City Code, that Code Enforcement Officer shall:

31.09 (D)(1)(a) Swear out an affidavit stating with particularity the basis of the Officer's belief, including:

31.09 (D)(1)(a)1. The nature and extent of the suspected violation;

31.09 (D)(1)(a)2. The source(s) of the information on which the Officer is basing his or her belief; and

31.09 (D)(1)(a)3. The circumstances under which the source(s) of the information obtained the information;

31.09 (D)(1)(b) Collect all documentary evidence of the suspected violation and attach that documentary evidence to the Code Enforcement Officer's affidavit as incorporated exhibits.

31.09 (D)(2) When a Code Enforcement Officer believes based upon reliable evidence that it is more likely than not that some Structures and/or Premises within a group of Structures and/or Premises are in violation of the City Code that Code Enforcement Officer shall:

31.09 (D)(2)(a) Swear out an affidavit stating with particularity the basis of the Officer's belief about the group of Structures and/or Premises, including:

31.09 (D)(2)(a)(1) The nature and extent of the suspected violation;

31.09 (D)(2)(a)(2) The source(s) of the information on which the Officer is basing his or her belief; and

31.09 (D)(2)(a)(3) The circumstances under which the source(s) of the information obtained the information;

31.09 (D)(2)(b) Collect all documentary evidence of the suspected violation and attach that documentary evidence to the Code Enforcement Officer's affidavit as incorporated exhibits.

31.09 (D)(2)(c) The Code Enforcement Officer's affidavit, together with the documentary evidence attached thereto, must establish a nexus between each Structure and/or Premises in the group of suspected Structures and/or Premises and the testimony and/or documentary evidence upon which the Code Enforcement Officer's belief is based.

31.09 (D)(3) On behalf of the City, the City Attorney shall seek a search warrant based upon the Code Enforcement Officer's affidavit and as required by law.

31.09 (E) ***Execution of the search warrant.*** Once the Code Enforcement Officer has received the search warrant, he or she shall execute the search warrant as soon as possible, provided that the time of execution is reasonable. When executing a search warrant Code Enforcement Officers shall be accompanied by an Officer of the Broward County Sheriff's Office.

§ 31.10 MINIMUM HOUSING/UNSAFE STRUCTURES.

The Building Official shall bring Minimum Housing/Unsafe Structures cases to a Minimum Housing/Unsafe Structures Board in accordance with the procedures set forth in the Florida Building Code, including Broward County Amendments.

ENFORCEMENT BY NOTICE OF VIOLATION METHOD

§ 31.20 NOTICE OF VIOLATION PROCEDURES.

31.20 (A) ***Written Notice.*** If a violation of the City Code is alleged to exist, the Code Enforcement Officer shall, except as provided in subsections (B) and (C) below, provide written notice to the alleged Violator of the violation and afford that Person a reasonable time, in light of the nature of the violation, to correct it. Should the violation continue beyond the time specified for correction, the Code Enforcement Officer shall notify the Special Magistrate Clerk, who shall schedule a hearing before a Special Magistrate. The Enforcement Officer, Special Magistrate Clerk, or other Person designated by the City Manager shall provide written notice of the hearing, by hand delivery or certified mail, return receipt requested, to the alleged Violator. At the option of the Special Magistrate, notice may additionally be served by publication or posting.

31.20 (B) ***Serious threat to public.*** If the Code Enforcement Officer has reason to believe a violation presents a serious threat to the public health, safety or welfare, the Code Enforcement Officer may proceed directly to a hearing, upon approval of the City Manager without notifying the alleged Violator. However, where possible, the Code Enforcement Officer shall use his/her best efforts to ensure that reasonable notice shall be given to the alleged Violator.

31.20 (C) ***Repeat violation.*** If a Code Enforcement Officer finds a repeat violation, the Officer shall notify the alleged Violator, but is not required to give the alleged Violator a reasonable time to correct the repeat violation. Upon notifying the alleged Violator, the Code Enforcement Officer shall notify the Special Magistrate Clerk, who shall schedule a hearing before a Special Magistrate and provide notice to the alleged Violator. The case may be presented to the Special

Magistrate, even if the repeat violation has been corrected prior to the Special Magistrate hearing, and the notice shall so state.

31.20 (D) ***Transfer of ownership.*** If the Owner of property that is subject to an enforcement proceeding pursuant to this Chapter transfers ownership of such property between the time the initial pleading was served and the time of the hearing, such Owner shall:

31.20 (D)(1) Disclose, in writing, the existence and the nature of the proceeding to the prospective transferee;

31.20 (D)(2) Deliver to the prospective transferee a copy of the pleadings, notices, and other materials relating to the code enforcement proceeding received by the transferor;

31.20 (D)(3) Disclose, in writing, to the prospective transferee that the new Owner will be responsible for compliance with the City Code and with orders issued in the code enforcement proceeding; and

31.20 (D)(4) File a notice with the Special Magistrate Clerk of the transfer of the property, with the identity and address of the new Owner and copies of the disclosures made to the new Owner, within five days after the date of the transfer.

31.20 (E) ***Rebuttable presumption.*** A failure to make the disclosures described in subsection (D) (1), (2), and (3) before the transfer creates a rebuttable presumption of fraud. If the property is transferred before the hearing, the proceeding shall not be dismissed, but the new Owner shall be provided a reasonable period of time to correct the violation before the hearing is held.

§ 31.21 SPECIAL MAGISTRATE PROCEDURES.

31.21 (A) ***Pre-hearing procedures.***

31.21 (A)(1) A time and date for the Special Magistrate hearing shall be set, and notice to the alleged Violator and the Code Enforcement Officer of the same shall be provided. The Violator may file a written reply to the charges contained in the notice of violation, which shall be known as the response. The response must contain the address of the violation, and the alleged Violator's relationship to the property (for example, owner, tenant, and the like).

31.21 (A)(2) If the violation is not corrected by the time specified for correction by the Code Enforcement Officer, the case may be presented to the Special Magistrate, even if the violation has been corrected prior to the Special Magistrate hearing, and the notice shall so state.

31.21 (B) ***Hearing procedures.***

31.21 (B)(1) At the time and place set for the hearing, the Special Magistrate shall hear and consider all testimony offered, and shall examine and consider all the evidence presented. After determining that there is a legally sufficient case to be presented, the City

Attorney shall present each case before the Special Magistrate. After the conclusion of the hearing, the Special Magistrate shall issue findings of fact and conclusions of law, in a written order, affording the proper relief consistent with the powers granted herein. Such order may command a Violator to take whatever steps are necessary to bring a violation into compliance by the time announced at the hearing and subsequently placed in the order. The findings, conclusions and order of the Special Magistrate shall be announced orally at the Special Magistrate hearing, and shall be reduced to writing and mailed to the Violator.

31.21 (B)(2) No Special Magistrate shall act in any case in which that Special Magistrate has a conflict of interest. If the Special Magistrate has a conflict of interest with any case, he/she shall orally announce such at the scheduled hearing. However if the Special Magistrate is aware of such conflict prior to the hearing, he/she shall notify the Special Magistrate Clerk, and that case shall be rescheduled for a hearing before another Special Magistrate.

31.21 (B)(3) All hearings of the Special Magistrate shall be open to the public, and any Person whose interests may be affected by the matter before the Special Magistrate shall be given an opportunity to be heard. The record of all hearings, agendas, findings, determinations and final orders shall be maintained by the Special Magistrate Clerk.

31.21 (B)(4) Hearings shall be informal and need not be conducted according to technical rules relating to evidence and witnesses. Fundamental due process shall be observed and shall govern all hearings.

31.21 (B)(5) All relevant evidence shall be admitted if, in the opinion of the Special Magistrate, it is the type of evidence upon which reasonable and responsible Persons would normally rely in the conduct of business affairs, regardless of the existence of any common law or statutory rule which might make such evidence inadmissible over objections in a civil action. The Special Magistrate may exclude irrelevant or unduly repetitious evidence.

31.21 (B)(6) Hearsay evidence may be accepted for the purpose of supplementing or explaining any direct evidence, but such hearsay evidence shall not in and of itself be considered sufficient to support a finding or decision, unless the evidence would be admissible over objections in a civil action.

31.21 (B)(7) Each party to the hearing shall have the right to call and examine witnesses, introduce exhibits, cross-examine opposing witnesses, impeach witnesses and rebut evidence.

31.21 (B)(8) The alleged Violator has the right, at his/her own expense, to be represented by an attorney at any Special Magistrate hearing.

31.21 (B)(9) All testimony before the Special Magistrate shall be under oath and shall be recorded. The alleged Violator or the City may cause the proceedings to be recorded by a certified court reporter or by a certified recording instrument.

31.21 (B)(10) The burden of proof shall be with the Code Enforcement Officer to show, by the greater weight of evidence, that a code violation exists and that the alleged Violator committed, or was responsible for maintaining, the violation.

31.21 (B)(11) If written notice of the hearing has been provided to an alleged Violator, a hearing may be conducted and an order rendered in the absence of the Violator.

31.21 (B)(12) The Special Magistrate may, for good cause shown, postpone or continue a hearing.

31.21 (B)(13) Reports of decisions. Subsequent to a public hearing, the Special Magistrate shall make a written report, a final order of his or her decision, in accord with the rules and procedures set forth herein, and shall provide a copy of the final order to all parties of record and appropriate City staff.

31.21 (B)(14) Records. The City shall record all proceedings. At a minimum, a summary of the testimony taken at such proceeding shall be provided in the final order, or as an appendix thereto.

31.21 (C) ***Subpoena powers.*** The Code Enforcement Officer, the Special Magistrate, the Code Prosecutor and the alleged Violator may request that witnesses and records, including surveys, plats and other materials, be subpoenaed to any formal hearings. Subpoenas may be served by Officers of the Police Department of the City, police aides or other such persons authorized to deliver subpoenas. The Special Magistrate shall provide the Special Magistrate Clerk with sufficient signed and blank witness and document subpoenas to be provided to alleged Violators and the Code Enforcement Officer for the purpose of having witnesses and records subpoenaed. For each subpoena served, the Violator shall pay to the City a fee that shall be set by resolution of the City Commission.

31.21 (D) ***Calling of emergency Special Magistrate hearings.*** The Special Magistrate may call an emergency Special Magistrate hearing. Written notice of any emergency hearing shall be given to an alleged Violator, if circumstances permit, at least one day in advance of such hearing. The Special Magistrate may, at any hearing, set a future hearing date.

§ 31.22 ENFORCEMENT ORDERS; FINES AND OTHER REMEDIES; RIGHT OF APPEAL.

31.22 (A) ***Remedies.***

31.22 (A)(1) The order of the Special Magistrate may require the Violator to pay a fine, not to exceed $1,000 per day, for each day that the violation continues past the date set in the order for compliance. In the case of a repeat violation, the Special Magistrate may order the repeat Violator to pay a fine not to exceed $5,000 per day, for each day the repeat violation continues past the date of notice to the Violator of the repeat violation. Upon a finding that the violation is irreparable or irreversible in nature, the Special Magistrate may order the violator to pay a fine not to exceed $15,000 per violation. In addition to such fines, the Special Magistrate may impose additional fines to cover all costs incurred by the City in enforcing the Code and all costs of repairs. The Special Magistrate may take any other action permitted by law.

31.22 (A)(2) If a finding of violation or repeat violation has been made, then a hearing shall not be necessary for the issuance of an order imposing a fine.

31.22 (A)(3) A certified copy of an order imposing a fine may be recorded in the public records of Broward County, Florida. Once recorded, it shall constitute a lien against the property upon which the violation was found to exist, and upon any other real or personal property owned by the Violator. Upon petition to the circuit court, it may be enforced in the same manner as a court judgment by the sheriffs of this State, including levy against the Violator's personal property, but shall not be deemed otherwise to be a judgment of the court except for enforcement purposes.

31.22 (A)(4) A fine imposed pursuant to this Section shall continue to accrue, until the Violator comes into compliance or until judgment is rendered in a suit to foreclose the lien, whichever occurs first. It shall be the responsibility of the Violator to notify the City if and when the Violator believes that the violation has been remedied.

31.22 (A)(5) After three months from the filing of any such unpaid lien, the City Attorney may foreclose upon the lien. The duration and effect of such lien shall be consistent with State law, which is a period of 20 years.

31.22 (B) ***Determination of fine amount.*** In determining the amount of the fine, if any, the Special Magistrate shall consider the following factors:

31.22 (B)(1) The gravity of the violation;

31.22 (B)(2) Any actions taken by the Violator to correct the violation; and

31.22 (B)(3) Any previous violations committed by the Violator, whether on the same or any other property.

31.22 (C) ***Injunctive Relief.*** In the event the Special Magistrate believes that a violation presents a serious threat to the public health, safety or welfare, or if the violation is irreparable or irreversible in nature, the Special Magistrate may request the City Attorney to seek appropriate injunctive relief in the name of the City in the appropriate court.

31.22 (D) ***Enforcement Order.***

31.22 (D)(1) Every enforcement order of the Special Magistrate shall be final, subject to the right of any aggrieved party, including the City or the Violator, to appeal a final administrative order of the Special Magistrate to the Circuit Court of the Seventeenth Judicial Circuit in and for Broward County, Florida. An appeal shall be filed within 30 days of the rendition of the order to be appealed.

31.22 (D)(2) Every enforcement order of the Special Magistrate shall have the force of law, shall be in writing, and shall include findings of fact and conclusions of law.

31.22 (D)(3) Every enforcement order of the Special Magistrate shall be signed by the Special Magistrate. All orders shall be filed in the office of the City Clerk. A copy of the signed order shall be sent by certified mail, return receipt requested, or where certified mailing would not be effective, by regular mail or by hand delivery by the Code Enforcement Officer to the Violator.

31.22 (D)(4) The Special Magistrate shall, in every proceeding, make a decision without unreasonable or unnecessary delay.

31.22 (E) ***Effect on Applications to City.*** Once the period for appeal has run with no appeal filed, the existence of an Order of the Special Magistrate finding a violation of City Code that has not been remedied, shall be considered in the processing of any application requiring City approval. When it is found that the nature of the violation is such that it bears on the Applicant's requested approval, it may provide justification for the City to withhold such approval until such time as the violation is abated and any unpaid fine has been satisfied.

31.22 (F) ***Additional Remedies.*** The provisions and procedures contained in this Chapter shall be in addition and supplemental to any other remedies now existing or subsequently provided for by law, regarding City Code violations.

§ 31.23 SETTLEMENT, DISPOSITION OF ALL COLLECTED FINES AND LIENS.

The City Manager is authorized to negotiate and settle all fines and liens imposed by the Special Magistrate relating to City Code violations that have been complied with by the Violator. However, the Special Magistrate shall ratify all decisions of the City Manager with respect to the settlement of any such fines and liens.

ENFORCEMENT BY SUPPLEMENTAL METHOD

§ 31.35 CITATION PROCEDURES.

31.35 (A) ***Citation.*** As an alternative to the notice of violation procedures set forth in §§ 31.20 and 31.21 hereof, a Code Enforcement Officer may issue a citation to a Person, when the Code Enforcement Officer, upon personal investigation, has a reasonable cause to believe that the Person has committed a violation of a City ordinance.

31.35 (B) ***Notice prior to issuance of citation.*** Prior to issuing a citation, the Code Enforcement Officer shall provide notice to the Person that the Person has committed a violation of a City ordinance, and shall establish a reasonable time period, not to exceed 30 days, within which the Person must correct the violation. Notwithstanding the foregoing, the Code Enforcement Officer does not have to provide a Person a reasonable time period to correct a violation prior to issuing a citation, if the Code Enforcement Officer has reason to believe the violation presents a serious threat to the health, safety or welfare of the citizens of the City, or if the violation is irreparable or irreversible.

31.35 (C) ***Format.*** The form of citation shall be as provided by State law.

31.35 (D) ***Fine Schedule.*** A Person who receives a citation from a Code Enforcement Officer for the violation of a City ordinance has committed a civil infraction, and shall be subject to a fine in accordance with the following schedule:

Violation Category	***First Offense***	***Second Offense***	***Third Offense***	***Fourth Offense****
Animal Nuisance	50.00	100.00	$200.00	$250.00-1000.00
Building Maintenance	50.00	100.00	200.00	$250.00 - 1000.00
Eyesore	50.00	100.00	200.00	$250.00-1000.00
Health Hazard	100.00	200.00	300.00	500.00-1000.00
Landscaping	50.00	100.00	200.00	$250.00-1000.00
Licensing	50.00	100.00	200.00	$250.00-1000.00
Litter/Debris	50.00	100.00	200.00	$250.00-1000.00
Nuisance	50.00	100.00	200.00	$250.00-1000.00
Recycling	50.00	100.00	200.00	$250.00-1000.00
Safety Hazard	100.00	200.00	300.00	500.00 - 1000.00
Signs/Advertising	50.00	100.00	200.00	$250.00-1000.00
Vehicle	50.00	100.00	200.00	$250.00-1000.00
Other	50.00	100.00	200.00	$250.00-1000.00
Development Permit/order	$250.00	$500.00	$500.00	$500.00 – 1000.00

Violation Category	***First Offense***	***Second Offense***	***Third Offense***	***Fourth Offense****
Reroofing a Building without a permit (FBC 301)	250.00	500.00	500.00	$500.00 – 1000.00
Alteration of a residential Building without a permit (FBC 301 or sec. 39-15)	250.00	500.00	500.00	$500.00 – 1000.00
Alteration of a commercial Building without a permit (FBC 301 or sec. 39-15)	250.00	500.00	500.00	$500.00 – 1000.00
** Mandatory court appearance for fourth offense				

Violation Category	***First Offense***	***Second Offense***	***Third Offense***	***Fourth Offense****
Construction of a Building addition or accessory Building without a permit (FBC 301 or sec. 39-15)	250.00	500.00	500.00	$500.00 – 1000.00
Maintaining unsanitary conditions (FBC 4601.1)	100.00	200.00	300.00	$500.00 – 1000.00
Discharging deleterious wastes to a drainage system (FBC 4601.1)	500.00	$500.00	$500.00	$500.00 – 1000.00
Hazardous electrical conditions (FBC 202)	$250.00	$500.00	$500.00	$500.00 – 1000.00
Unauthorized electrical installations (FBC 4501 et seq.)	250.00	500.00	500.00	$500.00 – 1000.00
Unauthorized electrical service connections (bypassed meter, taps on overhead FP & L conductors)	$250.00	$500.00	$500.00	$500.00– 1000.00
Expiration of a Building Permit (FBC 304.3)	$100.00	250.00	500.00	$500.00 – 1000.00
Failure to meet jobsite personnel requirements (FBC 4503.2)	$200.00	$400.00	$400.00	$500.00 – 1000.00
Means of egress (exit, exit access, exit discharge);locked, blocked, obstructed or impeded, obstruction to secondary means of egress windows (i.e. bars, security grills, etc.) and fire escapes, improper locking, latching or releasing devices (FFC 5201, 5203,5213, NFPA 101 Chapters 5, 31, FBC chapter 31)	500.00	750.00	1000.00	$500.00– 1000.00
** Mandatory court appearance for fourth offense				

Violation Category	***First Offense***	***Second Offense***	***Third Offense***	***Fourth Offense****
Means of egress marking: (exit signs) not provided, obstructed or blocked, improper illumination, not functioning (FFC 5201, 5213, FBC chapter 31, NFPA 101 chapters 5, 31)	250.00	500.00	500.00	$500.00 – 1000.00
Means of egress illumination: not provided, improper illumination, not properly maintained or functioning (FBC chapter 31, NFPA 101, chapters 5, 31)	250.00	500.00	500.00	$500.00 – 1000.00
Means of egress emergency lighting: not provided, not properly maintained or functioning, blocked or obstructed, inadequate (FFC 5211, FBC chapter 31, NFPA 101, chapters 5, 31)	250.00	500.00	500.00	$500.00 – 1000.00
Fire extinguishing and suppression systems: not provided, not functioning, not properly installed, maintained, tested or tagged, obstructed or blocked, not accessible, tampered with (FFC 5211, FAC sections 4A-46, 4A-21, NFPA 101, chapters 7, 31)	$250.00	$500.00	$500.00	$500.00 – 1000.00
Fire alarm and detection systems: not provided, not functioning, not properly installed, maintained, tested or tagged, obstructed or blocked, not accessible, tampered with (FFC 5211, FAC section 4A-48, FBC chapter 31, NFPA 101 chapters 7, 31)	$250.00	$500.00	$500.00	$500.00 – 1000.00
** Mandatory court appearance for fourth offense				

Violation Category	***First Offense***	***Second Offense***	***Third Offense***	***Fourth Offense****
Fire protection water supply devices (fire hydrants, fire wells, etc.): not provided, not functioning, not properly installed, tested or maintained, blocked or obstructed, not accessible, tampered with (FFC 5211, NFPA 101 chapter 31)	$250.00	$500.00	$500.00	$500.00 – 1000.00
Smoke detectors (commercial and residential) (system and single-station type devices): not provided, not functioning, not properly installed, tested or maintained, blocked or obstructed, not accessible, tampered with (FFC 5211, NFPA 101 chapters 7, 31)	$250.00	$500.00	$500.00	$500.00 – 1000.00
Portable fire extinguishers: not provided, not properly tested, serviced, maintained or tagged, not properly mounted or installed, not readily visible or accessible, blocked or obstructed, tampered with (FFC 5211, FAC 4A-21, NFPA 101)	$250.00	$500.00	$500.00	$500.00 – 1000.00
Maximum occupant load: overcrowding, no Sign posted (FFC 5215)	$250.00	$500.00	$500.00	$500.00 – 1000.00
Improper use and maintenance of electrical equipment, appliances, wiring, cords and related devices (FFC 5212)	$175.00	$350.00	$350.00	$350.00 - 1000.00
Tampering with fire department official barricades, locks, signs, seals, tags, etc., interfering with Fire Department operations (FFC 5203, 5205, 5211)	$250.00	$500.00	$500.00	$500.00 – 1000.00
** Mandatory court appearance for fourth offense				

Violation Category	***First Offense***	***Second Offense***	***Third Offense***	***Fourth Offense*****
Emergency property and vehicle access for Fire Department equipment and operations (fire lanes, laddering areas, fire access roads): not provided, not properly maintained, marked or designated, blocked or obstructed, impeded by parking (FFC 5211)	$250.00	$500.00	$500.00	$500.00 – 1000.00
Unlawful or unauthorized burning (open burning, campfires, bonfires, ceremonial burns, etc.): no permit or expired permit, unattended burning, burning of Rubbish or Trash (FFC 5212)	$250.00	$500.00	$500.00	$500.00– 1000.00
Barbecue grills and outdoor cooking (commercial and residential): improper and/or unsafe use of barbecue grills or similar cooking equipment (FCC 5212)	$250.00	$500.00	$500.00	$500.00– 1000.00
Accumulations of waste and readily combustible materials, overgrowth of weeds, grass, or other vegetation: improper storage and/or handling, unsafe or hazardous accumulations, or overgrowth endangering property (FFC 5212)	$250.00	$500.00	$500.00	$500.00– 1000.00
Flammable decorative materials: improper, unsafe or hazardous use of, improper use or storage within Structures (FFC 5212)	$250.00	$500.00	$500.00	$500.00– 1000.00
** Mandatory court appearance for fourth offense				

Violation Category	***First Offense***	***Second Offense***	***Third Offense***	***Fourth Offense*****
Torches, flames or spark producing devices: improper, unsafe or hazardous use of, improper fire protection features and distance separations (FFC 5212)	$250.00	$500.00	$500.00	$500.00–1000.00
Vacant Buildings: unsafe, unguarded, unsecured Structures, hazardous accumulations of flammable or combustible waste or Rubbish materials (FFC 5212)	$250.00	$500.00	$500.00	$500.00–1000.00
Buildings under Construction (emergency access, storage, open fires, water supply devices, extinguishing systems): not provided or maintained, improper storage or emergency access, improper or not functioning fire protection features, unsafe or hazardous operations (FFC 5211, FBC chapter 33, NFPA 101 chapter 31	$250.00	$500.00	$500.00	$500.00–1000.00
Heating and cooking equipment: improper maintenance, hazardous or unsafe use of equipment, appliances and devices (FFC 5212, NFPA 96)	$250.00	$500.00	$500.00	$500.00 – 1000.00
Accumulations of dust or waste materials in air conditioning or ventilation systems, or of grease in kitchen or other exhaust ducts (FFC 5203)	$250.00	$500.00	$500.00	$500.00 – 1000.00
** Mandatory court appearance for fourth offense				

Violation Category	***First Offense***	***Second Offense***	***Third Offense***	***Fourth Offense****
Fire reporting and false alarms: false emergency calls, delay in reporting fires, emergencies and fire alarms (FFC 5212)	$250.00	$500.00	$500.00	$500.00 – 1000.00
Smoking materials: careless or improper use of materials, designated smoking areas not provided, signs not posted or provided, receptacles (ashtrays) not provided or improper (FCC 5212)	$250.00	$500.00	$500.00	$500.00 – 1000.00
Improper storage, transporting, handling or dispensing of all classes of flammable and combustible liquids, or otherwise hazardous substances (FFC 5203, 5239, NFPA 30, 30A)	$250.00	$500.00	$500.00	$500.00 – 1000.00
Spraying of flammable or combustible materials without an approved spray booth, spray area or fire protection features (FFC 5224, NFPA 33)	$250.00	$500.00	$500.00	$500.00 – 1000.00
Storage, handling and/or use of hazardous materials, explosives, flammable or combustible liquids/ solids, LP gas and other compressed gases, or cellulose nitrate plastics: without an approved permit, fire protection features improper or not provided, unsafe or hazardous storage, handling or use (FFC 5206, 5203)	$250.00	$500.00	$500.00	$500.00 – 1000.00
Visible hazard identification signs (NFPA 704 Marking System): not provided, improperly displayed, not readable, not plainly visible, obstructed or blocked (FFC 5240)	$250.00	$500.00	$500.00	$500.00 – 1000.00
** Mandatory court appearance for fourth offense				

Violation Category	***First Offense***	***Second Offense***	***Third Offense***	***Fourth Offense****
Welding and cutting operations: operating without an approved permit, fire protection features not provided, inadequate or improper, improper clearances (FFC 5230, FBC 3321, NFPA 51, 51A, 51B)	$250.00	$500.00	$500.00	$500.00 – 1000.00
Storage, handling, use or sales of fireworks or sparklers: without approved permit, improper or unsafe storage, handling, use or sales, fire protection features not provided or improper, fire separation improper or not provided (FFC 5206, 5238)	$250.00	$500.00	$500.00	$500.00 – 1000.00
Trash chutes (commercial and residential): chute openings not properly protected, not self- closing, trash chute fusible links not provided or properly maintained (FBC 1807)	$250.00	$500.00	$500.00	$500.00 – 1000.00
Storage within Structures and open storage: not orderly, improper clearances, impeding or obstructing exitways, aisles or fire protection systems and equipment, improper height and stacking practices, improper or unsafe storage creating a fire hazard (FFC 5212)	$250.00	$500.00	$500.00	$500.00 – 1000.00
Display of Building address: not provided, improperly installed, not plainly visible or contrasting, improper size address numbers/ letters, blocked or obstructed, not properly illuminated (FFC 5211)	$250.00	$500.00	$500.00	$500.00 – 1000.00
** Mandatory court appearance for fourth offense				

Violation Category	***First Offense***	***Second Offense***	***Third Offense***	***Fourth Offense****
Fire drills, evacuation plans, resident training, employee training, fire extinguisher training: not provided or performed, inadequate training, improper documentation, not properly posted (NFPA 101 chapter 31)	$250.00	$500.00	$500.00	$500.00 – 1000.00
Places of assembly: operating without an approved permit or inspection, crowd control and fire control inadequate, improper or not provided, improper or unauthorized use of candles, open flames, dry ice or smoke- making machines, seating plans not provided or improper (FFC 5206, 5215)	$250.00	$500.00	$500.00	$500.00 – 1000.00
Parking of vehicles inside Structures (commercial and residential): improper, unauthorized or unsafe parking of vehicles inside Structures or Buildings (FFC 5203, 5215, NFPA 101 chapters 8, 9, 29, 31)	$250.00	$500.00	$500.00	$500.00 – 1000.00
Carnivals, circuses, special events, tents and air-supported Structures: operation or use without approved inspection or permit, fire protection features inadequate, improper or not provided, means of egress improper, inadequate, not provided, obstructed or blocked, flame retardant materials not provided, unsafe or unauthorized cooking operation, unlawful smoking (FFC 5206, 5215, 5250, NFPA 101 chapters 8, 31)	$250.00	$500.00	$500.00	$500.00 – 1000.00
** Mandatory court appearance for fourth offense				

Violation Category	***First Offense***	***Second Offense***	***Third Offense***	***Fourth Offense*****
Fueling equipment (i.e. piping, pumps, flanges connections, hoses): malfunctioning, leaking, defective, not properly installed, tested or maintained (FFC 5209, NFPA 407)	$250.00	$500.00	$500.00	$500.00 – 1000.00
Fueling hose and couplings: defective, leaking, not properly tested or maintained, improper coupling arrangement, hydrostatic testing not performed, hydrostatic test records and/or inspection records not suitably maintained	$250.00	$500.00	$500.00	$500.00 – 1000.00
Fuel operation control devices: defective, inoperable, locks open, improper use, use defeated, improper operation of automatic braking system (FFC 5209, NFPA 407)	$250.00	$500.00	$500.00	$500.00 – 1000.00
Fueler vehicle and equipment (i.e. brakes, parking brakes, tires): needs repair or replacement, remove accumulations of grease, oil or combustibles, replace or repair tires, remove Debris (FCC 5209, NFPA 407)	$250.00	$500.00	$500.00	$500.00 – 1000.00
Emergency fuel shutoffs and placarding: not provided, not accessible, defective, improper number of shutoffs, emergency instructions not posted at controls, improper placarding, placards not legible or visible, improper size lettering (FFC 5209, NFPA 407)	$250.00	$500.00	$500.00	$500.00 – 1000.00
** Mandatory court appearance for fourth offense				

Violation Category	***First Offense***	***Second Offense***	***Third Offense***	***Fourth Offense****
Fueler fire extinguishers: not provided, insufficient quantity, improper type or rating not accessible, not properly installed, serviced, tested or maintained, location signage not provided or posted (FFC 5209, NFPA 407)	$250.00	$500.00	$500.00	$500.00 – 1000.00
Electrostatic hazards and bonding: bonding not provided, improper bonding, defective or insufficient bonding, bonding defeated (FFC 5209, NFPA 407)	$250.00	$500.00	$500.00	$500.00 – 1000.00
Fueler engine exhaust system: improperly installed, located, discharged or shielded, components unsecured or in disrepair (FFC 5209, NFPA 407)	$250.00	$500.00	$500.00	$500.00 – 1000.00
Fueler vehicle lighting and electrical equipment: inadequate wiring and lighting equipment, improper wiring installation, inoperable lamps, unenclosed lamps and switching devices, non-weatherproof or non-gasketed switching devices and lamps (FFC 5209, NFPA 407)	$250.00	$500.00	$500.00	$500.00 – 1000.00
Fueler vehicle spark plugs and/or terminal connections: not insulated, improperly insulated, not properly maintained (FFC 5209, NFPA 407)	$250.00	$500.00	$500.00	$500.00 – 1000.00
** Mandatory court appearance for fourth offense				

Violation Category	***First Offense***	***Second Offense***	***Third Offense***	***Fourth Offense****
Smoking equipment, restrictions, and signage: non-compliant smoking materials and equipment, "No Smoking" signs not provided or posted, not legible or visible, insufficient number of signs, signs not properly located (FFC 5209, NFPA 407)	$250.00	$500.00	$500.00	$500.00 – 1000.00
Full openings and top flashings (i.e. dome covers, gasket seals, self-latching catches): door cover improperly hinged, repair or replace dome cover, replace or repair seals/gaskets or self- latching catches, improper installation, testing or maintenance of seals, gaskets, latching equipment (FFC 5209, NFPA 407)	$250.00	$500.00	$500.00	$500.00 – 1000.00
Fuel product identification sign/placards: install or replace product identification signs/ placards, improper location of signs/placards. In vehicle, insufficient size lettering on signs/ placards, not legible or visible (FCC 5209, NFPA 407)	$250.00	$500.00	$500.00	$500.00 – 1000.00
** Mandatory court appearance for fourth offense				

Violation Category	*First Offense*	*Second Offense*	*Third Offense*	*Fourth Offense***
Vehicle clearance and spacing: improper clearance between vehicles, improper clearance between vehicles and aircraft, improper clearance between vehicles and Structures/Buildings, improper clearance during aircraft fueling operation, improper clearance during dispensing/transferring of fuel, improper clearance to aircraft during tank to tank fuel transfer (FCC 5209, NFPA 407)	$250.00	$500.00	$500.00	$500.00 – 1000.00
Fueling operations: fueling equipment operator not properly trained, improper transferring of fuel, fueling equipment not being properly maintained, fueling equipment/vehicle left unattended during fueling operations, spill/leak control measures not properly performed (FCC 5209, NFPA 407)	$250.00	$500.00	$500.00	$500.00 – 1000.00
** Mandatory court appearance for fourth offense				

31.35 (E) ***Additional means of enforcement.*** Nothing contained in this Section shall prohibit the City from enforcing the City Code by other means.

§ 31.36 SUPPLEMENTAL PROVISIONS.

The provisions and procedures contained in this Chapter shall be in addition and supplemental to any other remedies now existing or subsequently provided for by law regarding violations of municipal ordinances. Nothing contained in this Section shall prohibit the City from enforcing the City Code by any other means.

§ 31.37 CORRECTION OF CONDITION BY CITY.

31.37 (A) ***Owner's Expense.*** If the condition described in a notice has not been remedied within the period of time given in the notice of violation after the mailing or service or posting of such notice, or in the event that there is a hearing, as provided for by § 31.01 et seq. of this Code, after notice to the property Owner of the unfavorable decision of the Special Magistrate, the condition shall be remedied by the City at the expense of the property Owner. Such expense shall include reasonable administrative expenses, filing costs, and attorney's fees. The filing and enforcement of any lien shall be in accordance with § 31.01 et seq. of this Code.

31.37 (B) ***Lien on property***. Actions taken by the City to repair or correct a violation of the City Code shall be and become a lien upon the property or properties upon which the violation

occurred. The amount of the lien shall include all costs incurred by the City as a result of the City's finding of a violation and actions taken to repair or correct such violation. The City's entitlement to these costs is perfected upon the commitment by the City to incur the costs. The City may record its claim of lien in the public records of Broward County. All liens created as a result of actions taken by the City to repair or correct serious threats to life, health, safety and/or welfare shall remain liens, coequal with the liens of all State, county, district and municipal taxes, superior in dignity to all other liens, titles and claims, until paid.

TITLE IV: TAXES, FEES AND COSTS

CHAPTER 40. BUSINESS TAX RECEIPTS.

§ 40.01 PAYMENT OF BUSINESS TAX.

40.01 (A) ***Business defined.*** The following definitions apply to the Code provisions of this Chapter 40 only:

40.01 (A)(1) "Business" includes the work, vocation, profession, occupation, commercial enterprise or trade in which a person is engaged, and all activities and matters together with all devices, machines, vehicles and appurtenances used therein, any of which are conducted, either directly or indirectly, on or from any premises in the City.

40.01 (A)(2) "Business" does not include Nonprofit Charitable Institutions, Nonprofit Educational Institutions, or Nonprofit Religious Institutions.

40.01 (A)(3) "Business" does not include a Person that solely manages personal investments from a residential property.

40.01 (B) ***Requirement to pay Business Tax.*** No Person shall engage in any Business that is carried on within the City, and no Business Tax Receipt shall be issued, until a Business Tax for the current year, and all prior outstanding Business Taxes have been paid for such Business and the proper Business Tax Receipt obtained.

40.01 (C) ***Dates Due***. All Business Tax Receipts shall be sold by the City beginning July 1 of each Year, are due and payable on or before September 30 of each Year, and expire on September 30 of the succeeding Year. If September 30 falls on a weekend or holiday, the tax is due and payable on or before the first working day following September 30.

40.01 (D) ***Partial Year Payment.*** Applicants for Business Tax Receipts that apply after the beginning of the Fiscal Year (October 1) but before April 1 of that Fiscal Year shall pay the full tax for one year and Applicants that apply on or after April 1 of the Fiscal Year but before September 30 of that Fiscal Year shall pay one-half the full tax for one year, except as herein otherwise provided.

40.01 (E) ***Amount of Business Tax.*** Each Business shall pay a Business Tax in the amount set forth below:

Category	Tax	
	Full Year	Partial Year
I. Hotels, Motels, Apartments or Timeshares with 250 units or more	**$ 5,512.50**	**$ 2,756.25**
II. Warehouse, Manufacturing Facility or Pharmacy with 50,000 square feet or more	**$ 3,675**	**$ 1,837.50**
III. Supermarkets	**$ 2,887.50**	**$ 1,443.75**
IV. Warehouse, Manufacturing Facility or Pharmacy between 20,000 square feet and 49,999 square feet	**$ 2,205**	**$ 1,102.50**
V. Warehouse, Manufacturing Facility or Pharmacy between 10,000 square feet and 19,999 square feet; Apartments or Timeshares with 100 – 249 units; Hotels or Motels with 150-249 rooms Country Clubs and Golf Course(s); Athletic/Fitness Club with Pool	**$ 1,312.50**	**$ 656.25**
VI. Limited Business Home Occupation Business with only a Post Office, Private Mail Box or Registered Office in the City	**$ 157.50**	**$ 78.75**
VII. Individual Professional Entity	**$ 78.75**	**$ 39.37**
VIII. General Business (all other Businesses)	**$ 236.25**	**$ 118.12**

40.01 (F) ***Separate location.*** A separate Business Tax Receipt shall be obtained for each location of any Business located within the City.

40.01 (G) ***Separate Business.***

40.01 (G)(1) Each Business entity registered with the State shall constitute a single and separate Business, requiring a Business Tax Receipt for each registered Business entity.

40.01 (G)(2) A separate Business Tax Receipt shall be obtained for each separate Business at the same location.

40.01 (G)(3) Each receipt obtained by a Business shall be issued to cover only the Business licensed thereby at the location and in the category designated in such receipt.

40.01 (H) ***Starting date of payment responsibility***. For purposes of this Chapter of the Code, the starting date of a Business and the starting date of a Business's responsibility for payment of a Business Tax shall be as follows:

40.01 (H)(1) *Commercial Locations:* Upon the later of

40.01 (H)(1)(a) the effective date of the State filing; or, if applicable,

40.01 (H)(1)(b) the issuance of a Certificate of Use; or, if applicable,

40.01 (H)(1)(c) the effective date of a lease for commercial space

40.01 (H)(2) *Home Occupations:* Upon the earlier of

40.01 (H)(2)(a) the issuance of a Business Tax Receipt for a Home Occupation; or

40.01 (H)(2)(b) upon transacting commerce from a Residential Property

40.01 (H)(3) *Mailboxes:* Upon the earlier of

40.01 (H)(3)(a) the effective date of a State or Federal filing indicating the mailbox location within the City; or

40.01 (H)(3)(b) the mailbox lease effective date

40.01 (I) ***Ending date of payment responsibility.*** For purposes of this Chapter of the Code, the ending date of a Business and the ending date of a Business's responsibility for payment of a Business Tax shall be upon the completion of:

40.01 (I)(1)(a) the filing of the Articles of Dissolution, as provided by the State, with the City; or

40.01 (I)(1)(b) the filing of confirmation with the City, as provided by the State, that the Business has been administratively dissolved; and

40.01 (I)(2) the signing and filing of a sworn affidavit with the City affirming that the Business no longer Transacts Commerce within the City.

For the purposes of this Chapter of the Code, providing proof of an involuntary dissolution is insufficient evidence of proof of the ending date of a Business.

40.01 (J) ***Receipt display.*** Any Person issued a Business Tax Receipt shall post the Business Tax Receipt in a conspicuous place in or about such Person's place of Business.

40.01 (K) ***Refund of fees.*** If the City Manager finds that a Business Tax was collected incorrectly and a refund is warranted, the City may issue a refund up to the difference between the amount actually paid to the City and all amounts payable under a proper Business Tax Receipt.

§ 40.02 BUSINESS TAX RECEIPT APPLICATION AND TERM.

40.02 (A) ***Application.*** To obtain a Business Tax Receipt, Businesses shall complete a Business Tax Receipt form provided by the City and submit the form to the City Manager.

40.02 (B) ***Expiration.*** All Business Tax Receipts issued under this Chapter shall expire on September 30 of each Year. No Business Tax Receipt shall be issued for more than one Fiscal Year.

§ 40.03 BUSINESS TAX EXEMPTIONS AND CREDITS.

40.03 (A) ***Exemptions for certain disabled Persons, the aged and widows with minor dependents.***

40.03(A)(1) All disabled Persons physically incapable of manual labor, widows with minor dependents, and Persons 65 years of age or older, with not more than one employee or helper, and who use their own capital only, not in excess of $1,000, may engage in any Business without being required to pay a Business Tax. The exemption provided by this Section shall be allowed only upon the certificate of the county physician, or other reputable physician, that the Applicant claiming the exemption is disabled, the nature and extent of the disability being specified therein, and in case the exemption is claimed by a widow with minor dependents, or a Person over 65 years of age, proof of the right to the exemption shall be made. Any Person entitled to the exemption provided by this Section shall, upon application and furnishing of the necessary proof as aforesaid, be issued a Business Tax Receipt that shall have plainly stamped or written across the face thereof the fact that it is issued under this Section, and the reason for the exemption shall be written thereon.

40.03 (A)(2) Neither this nor any other Law exempts any Person from the payment of any amount required by Law for the issuance of a license to sell intoxicating Liquors or malt and

vinous beverages. Applicants granted a Business Tax Receipt under this Section shall not be exempt from the other provisions of this Chapter or the City Code.

40.03 (B) ***Nonresident temporary or transitory services exemption.*** Any Person engaging in a Business regulated by the Department of Business and Professional Regulation who has paid a Business Tax for the current year to the county or municipality in the state where the Person's permanent Business location or branch office is maintained, shall be exempt from obtaining a Business Tax Receipt from the City, for performing work or services on a temporary or transitory basis in the City.

40.03 (C) ***Charitable organization exemption.***

40.03 (C)(1) A Business Tax Receipt is not required of any charitable, religious, fraternal, youth, civic, service, or other similar organization that makes occasional sales or engages in fundraising projects that are performed exclusively by the members, and the proceeds derived from the activities are used exclusively in the charitable, religious, fraternal, youth, civic, and service activities of the organization.

40.03 (C)(2) A Person that is a "Nonprofit Charitable Institution" as defined in the City Code, and is therefore not a "Business" subject to payment of a Business Tax, or a Person that qualifies for the charitable organization exemption in this Section, shall be exempt from payment of a Business Tax upon filing a sworn statement to the City Manager, under penalty of perjury and on a form provided by the City, that such Person:

40.03 (C)(2)(a) is a "Nonprofit Charitable Institution" as defined in the City Code, or

40.03 (C)(2)(b) qualifies for the charitable organization exemption in §40.03(C)(1) of the Code.

40.03 (D) ***Religious exemption.*** This Chapter does not require a Business Tax Receipt for practicing the religious tenets of any church.

40.03 (E) ***Motor vehicle exemption.*** Vehicles used by any Person receipted under this Chapter for the sale and delivery of tangible personal property at wholesale or retail from his or her place of Business on which a Business Tax is paid may not be construed to be separate places of Business, and a Business Tax shall not be levied on such vehicles or the operators thereof as salespersons or otherwise, any other Law to the contrary notwithstanding.

40.03 (F) ***Veteran's credit.*** Any honorably discharged veteran of any branch of the armed forces of the United States who is disabled from performing manual labor and a permanent resident of the State shall receive a credit of $50 on any Business Tax Receipt granted under this Chapter. The unremarried spouse of a deceased disabled veteran of any war in which the United States armed forces participated is entitled to the same exemptions as the disabled veteran.

§ 40.04 EVIDENCE OF ENGAGING IN BUSINESS.

40.04 (A) ***One act constitutes evidence of engaging in Business***. For purposes of this Chapter, any Person shall be presumed to be engaged in Business in the City and thus responsible for paying a Business Tax, when that Person does any of the following:

40.04 (A)(1) submits a State and/or Federal filing indicating a Business address located within the City. Such filings include, but are not limited to:

40.04 (A)(1)(a) filings with the Secretary of State,

40.04 (A)(1)(b) filings regarding a Federal Employer Identification Number (FEIN) or Taxpayer Identification Number (TIN), and

40.04 (A)(1)(c) filings regarding a sales tax certificate

40.04 (A)(2) Transacts Commerce from a Residential Property within the City,

40.04 (A)(3) utilizes a Residential Property as a location for a Business telephone, address for Business correspondence or storage place for Business records,

40.04 (A)(4) executes a commercial lease for a location within the City,

40.04 (A)(5) owns a commercial property within the City, or

40.04 (A)(6) holds an active license or permit issued by a governmental agency indicating that Person is in Business in the City.

40.04 (B) ***Affidavit rebutting presumption.***

40.04 (B)(1) A Person that is presumed to be engaged in Business in the City pursuant to 40.04(A) may rebut the presumption by filing a sworn statement to the City Manager, under penalty of perjury and on a form provided by the City, that such Person is not engaged in Business in the City (i.e. that the Person is not, from or within the City: manufacturing, distributing, repairing, buying, selling, or offering for sale goods; providing, scheduling, selling or offering for sale services; leasing property for non-residential purposes; or transacting any other commerce).

40.04 (B)(2) The sworn statement must be filed with the City Manager for each Fiscal Year in which a Person desires to rebut the presumption of engaging in Business. It shall be the duty of the Person filing the sworn statement to notify the City of any changes that affect the continued accuracy of the sworn statement.

40.04 (B)(3) Existing businesses may rebut the presumption of engaging in Business for the upcoming Fiscal Year by filing the sworn statement described in (B)(1) above with the City prior to October 1 of the upcoming Fiscal Year.

40.04 (B)(4) New businesses may rebut the presumption of engaging in Business for the current Fiscal Year by filing the sworn statement described in (B)(1) above within 60 days after first engaging in any of the acts set forth in (A) above.

40.04 (B)(5) A Person may not retroactively rebut the presumption of engaging in Business for current or prior Fiscal Years and no refunds will be issued for any Fiscal Year in which a Person fails to file the sworn statement described in (B)(1) above prior to October 1 of the applicable Fiscal Year.

40.04 (C) ***Advertising with address located in City.*** Any Person who by use of Signs, circulars, cards, websites, telephone books, electronic communications, newspapers, letterhead, or any other means, advertises, holds out, or represents that the Person engages in Business with a Business address located within the City, is engaging in Business in the City.

§ 40.05 BUSINESS TAX RECEIPT TRANSFERABILITY.

40.05 (A) Upon application and presentation of the original Business Tax Receipt, any Business Tax Receipt may be transferred from one location to another location within the City upon payment of the transfer fee of 10% of the annual Business Tax, not to exceed $25.

40.05 (B) Any Business Tax Receipt may be transferred to a new owner when there is a bona fide sale of the Business, upon payment of a transfer fee of 10% of the annual Business Tax, not to exceed $25.

40.05 (C) No Business Tax Receipt shall be transferred without submission of a new application in accordance with § 40.02.

§ 40.06 PROOF OF STATE LICENSE OR REGISTRATION REQUIRED FOR STATE REGULATED BUSINESSES.

40.06 (A) ***First-time Applicants.*** Any Person applying for a Business Tax Receipt for the first time, to engage in any Business regulated by the Department of Business and Professional Regulation, or any board or commission thereof, must exhibit an active State certificate, registration, or license, or proof of copy of the same, before such Business Tax Receipt may be issued.

40.06 (B) ***Non-renewal of Business Tax Receipt.*** If the City is notified by the Department of Business and Professional Regulation that an Applicant is a Person for whom a Business Tax Receipt should not be renewed due to the suspension, revocation, or inactivation of such Person's State license, certificate, or registration, the City shall not renew such Business Tax Receipt unless such Person can exhibit an active State certificate, registration, or license.

40.06 (C) ***Inapplicability of this Section.*** This Section shall not apply to the contractor related businesses regulated under Florida Statutes, §§ 489.113, 489.117, 489.119, 489.131, 489.511, 489.513, 489.521 or 489.537.

§ 40.07 PENALTY FOR FAILURE TO PAY BUSINESS TAX.

40.07 (A) ***Penalty.*** Any Person who engages in any Business within the City without first obtaining a Business Tax Receipt, if hereby required, is subject to a penalty of 25% of the Business Tax due, in addition to any other penalty provided by Law or ordinance.

40.07 (B) ***Property Owner Liable.*** If a Person or Business fails to comply with this Chapter of the Code, the City Manager may cite the non-complying Person or Business, the Business entity occupying the Premises where the non-complying Person or Business exists and the property Owner of the Premises where the non-complying Person or Business exists. Until all outstanding Business Taxes are paid, Persons or Businesses cited under this Section of the Code are subject to the same penalties as the non-complying Person or Business.

40.07 (C) ***Delinquency.*** Business Tax Receipts that are not renewed when due and payable are delinquent and subject to a delinquency penalty of 10% for the month of October, plus an additional 5% penalty for each subsequent month of delinquency until paid. Each delinquency penalty shall be applied to the amount equal to the Business Tax due plus all previous outstanding delinquency penalties. However, the total delinquency penalty may not exceed 25% of the Business Tax for the delinquent establishment. Any money received shall be applied to the oldest delinquent Business Tax and penalties first.

40.07 (D) Except as otherwise provided, any Person who engages in any Business covered by this Chapter who does not pay the required Business Tax within 150 days after the initial notice of the tax due and who does not obtain the required Business Tax Receipt is subject to civil actions and penalties, including court costs, reasonable attorneys' fees, additional administrative costs incurred as a result of collection efforts, and a penalty equal to the annual amount of the Business Tax or $250, whichever is less.

§ 40.08 COMPLIANCE WITH BUILDING AND ZONING REGULATIONS REQUIRED.

40.08 (A) ***Duty to comply with City Code.*** Each Applicant for a Business Tax Receipt shall state and set out the exact location at which such Business shall be operated. It shall be the duty of the Applicant to ensure the Business location complies with the City Code, rules and regulations, including, but not limited to, all building and zoning regulations. The issuance of a Business Tax Receipt by the City shall not signify that the Business location is in compliance with any city code, rule or regulation, other than the payment of the Business Tax, nor may it be relied upon by the Applicant or any other Person or entity as evidence of compliance with any code, rule or regulation other than payment of the Business Tax.

40.08 (B) ***Certificate of Use.*** No Business Tax Receipt shall be issued until a certificate of use has been issued in accordance with the City Code, unless its Business does not require a certificate of use.

40.08 (C) ***Affidavit Required.*** In order to obtain an annual Business Tax Receipt, each Applicant for a Business Tax Receipt shall submit to the City an affidavit, on a form approved by the City Manager stating whether any alterations have been made to the physical space since the issuance of the certificate of use, and if so a description of the alterations, and the Building Permit number for the alterations, if any. It is a violation of this Section and punishable as provided in Section 2.99 of this Code to falsify the affidavit.

SPECIFIC BUSINESS REQUIREMENTS

§ 40.10 ASSISTED LIVING FACILITIES.

An assisted living facility operating pursuant to Florida Statutes, Chapter 400, Part III, shall not be granted a Business Tax Receipt if the State Agency for Health Care Administration has so instructed the City.

§ 40.11 CONTRACTORS.

Contractors will be required to provide proof of insurance and certificate of competency as required under Florida Statutes at the time of application for a Business Tax Receipt and/or renewal thereof.

§ 40.12 HEALTH STUDIOS; CONSUMER PROTECTION.

No Business Tax Receipt for the operation of a health studio pursuant to Florida Statutes, §§501.012 through 501.019, or ballroom dance studio pursuant to Florida Statutes, §501.143, shall be issued unless such business exhibits a current license, registration, or letter of exemption from the Department of Agriculture and Consumer Services. Upon presentation of the requisite document from the Department and the required fee, a Business Tax Receipt shall be issued by the City.

§ 40.13 MOBILE FOOD VENDORS.

No Business Tax Receipt shall be issued or granted to any Applicant to engage in the business of moving vehicles doing business from same as a Mobile Vendor of food or beverages unless the Applicant has in his or her possession and presents to the City Manager written approval from the Broward County Health Department for the operation of said business.

§ 40.14 PEST CONTROL BUSINESS.

No Business Tax Receipt shall be issued to any pest control business regulated under Florida Statutes, Chapter 482, unless a current license has been procured from the Department of Agriculture and Consumer Services for each of its business locations in the City. Upon presentation of the requisite licenses from the Department and the required fee, a Business Tax Receipt shall be issued by the City.

§ 40.15 PHARMACIES AND PHARMACISTS.

No Business Tax Receipt shall be issued to operate a retail pharmacy unless the Applicant produces a current permit issued by the Board of Pharmacy; however, no such Business Tax Receipt is required to practice the profession of pharmacist. Upon presentation of the requisite licenses from the Board of Pharmacy and the required fee, a Business Tax Receipt shall be issued by the City.

§ 40.16 PRIVATE DETECTIVES AND CRIMINAL INVESTIGATORS.

40.16 (A) All private detectives or criminal investigators maintaining a physical office in the City are required to obtain a Business Tax Receipt.

40.16 (B) In addition to the above requirements, the following prohibitions shall apply to any Person, firm, or corporation licensed by the Secretary of State of this State pursuant to Florida Statutes, Chapter 493 to operate under a Class "B" or Class "D" license:

40.16 (B)(1) A receipt holder shall not use any designation or trade name which implies or gives an impression that such Person, firm, or corporation is associated with any Police Department, including but not limited to using the word "police" or "Weston police" or "BSO" or "Broward Sheriff's Office" or any official seal or facsimile thereof of the City, county or State on badges, cap shields, patches, automobiles, decals, or advertisements within the City.

40.16 (B)(2) Receipt holders shall not utilize uniforms or badges capable of being associated or confused with or of the same color and with similar insignia to the official uniforms of any Police Department.

40.16 (C) Provisions of this Section shall not apply to any police officer of the City when performing duties approved by his or her superiors.

40.16 (D) Any violations of this Section may be punished up to the maximum penalty provided in this Code.

§ 40.17 PSYCHOLOGISTS.

No Applicant shall be issued Business Tax Receipt for the practice of psychology in the City without first procuring a current professional certificate under the seal of the Broward County Administrator, in accordance with the provisions of the Broward County Psychological Practice Ordinance. A copy of said certificate shall be attached to each application form.

§ 40.18 SELLERS OF TRAVEL; CONSUMER PROTECTION.

No Business Tax Receipt shall be issued to engage in business as a seller of travel unless such business exhibits a current registration or letter of exemption from the Department of Agriculture and Consumer Services. Upon presentation of the requisite document from the Department and the required fee, a Business Tax Receipt shall be issued by the City.

§ 40.19 SOLICITORS AND CANVASSERS.

For the purposes of this Section, solicitors and canvassers shall be required to fulfill the requirements of this Chapter, where applicable, in addition to fulfilling all other requirements of the City Code, prior to engaging in business within the City.

§ 40.20 TELEMARKETING BUSINESSES; CONSUMER PROTECTION.

No Business Tax Receipt shall be issued for the operation of a telemarketing business under Florida Statutes, §§501.604 and 501.608, unless such business exhibits a current license or registration

from the Department of Agriculture and Consumer Services or a current affidavit of exemption. Upon presentation of the requisite document from the Department and the required fee, a Business Tax Receipt shall be issued by the City.

CHAPTER 41. PUBLIC SERVICE TAX.

§ 41.01 PAYMENT OF PUBLIC SERVICE TAX.

41.01 (A) Any Person using electricity, metered or bottled gas (natural, liquefied petroleum gas or manufactured), and fuel oils, within the corporate limits of the City shall pay a public service tax at a rate of 10% on the payments received by the seller. The tax shall be paid to the seller of such electricity, metered or bottled gas, and fuel oils, at the time payment is due to the seller, but not less than monthly.

41.01 (B) Pursuant to Florida Statutes § 166.231(1)(b), the tax herein imposed shall not be applied against any fuel adjustment charge and such charge shall be separately stated on each bill.

§ 41.02 SELLER'S DUTY TO COLLECT TAX.

41.02 (A) ***Duty to collect tax.*** Every seller of electricity, metered or bottled gas (natural, liquefied petroleum gas or manufactured), and fuel oils shall collect a public service tax from each purchaser, for the use of the City, at the time of collecting the selling price charged for each transaction, and to report and pay over, on or before the 20th day of each month, unto the City, all such taxes levied and collected during the preceding month.

41.02 (B) ***Timing for collection of tax.*** It shall be unlawful for any seller to collect the price of any purchase of electricity, metered or bottled gas (natural, liquefied petroleum gas or manufactured), and fuel oils without at the same time collecting the tax hereby levied in respect to such purchase or purchases, unless such seller shall elect to assume and pay such tax without collecting the same from the purchaser.

41.02 (C) ***Seller liable for failure to collect tax.*** Any seller failing to collect such tax at the time of collecting the price of any purchase, where the seller has not elected to assume and pay such tax, shall be liable to the City for the amount of such tax in like manner as if the same had been actually paid to the seller, and the City Manager may cause to be brought all suits and actions as may be necessary for the recovery of such tax.

§ 41.03 RECORDS; INSPECTION; AUDIT.

41.03 (A) Providers of electricity, metered or bottled gas (natural, liquefied petroleum gas or manufactured) and fuel oils within the corporate limits of the City taxable in accordance with this Chapter shall provide to the City, upon 60 days written notice of intent to audit by the City, access to all applicable records for such services, except an extension of this 60-day period shall be granted if reasonably requested by the provider.

41.03 (B) Any additional extension by the seller or the City shall be granted only upon 30 days written notice prior to the expiration of the existing extension from the requesting party except in cases of bona fide emergency or waiver of the notice requirement by the other party.

41.03 (C) The audit shall be conducted in accordance with Florida Statutes, including the determination of tax due, refund due, and assessment of interest and penalties.

§ 41.04 EXEMPTIONS.

41.04 (A) Purchases by the United States Government, this State, and all counties, school districts, municipalities in Florida, and by public bodies exempted by Law or court order, are exempt from the tax authorized by this Chapter.

41.04 (B) The purchase of electricity, metered or bottled gas (natural, liquefied petroleum gas or manufactured), and fuel oils within the corporate limits of the City by any Religious Institution possessing a consumer certificate of exemption issued under Florida Statutes, Chapter 212 is hereby exempt from the public service tax levied by this Chapter.

§ 41.05 COMPUTING OF TAX.

41.05 (A) In all cases where the seller of electricity, metered or bottled gas (natural, liquefied petroleum gas or manufactured), and fuel oils collects the price thereof at monthly periods, the tax hereby levied may be computed on the aggregate amount of purchases during such period provided that the amount of tax to be collected shall be the nearest whole cent to the amount computed.

41.05 (B) When a seller renders a bill to a purchaser to cover purchases made during the particular period of time to which a bill is applicable, the amount of the public service tax shall be stated separately from other governmental charges and taxes and shall not be levied on such taxes and charges.

§ 41.06 PENALTY.

41.06 (A) Failure to pay any tax when due or failure to file any required return shall result in the assessment of interest at the rate of 1% per month of the delinquent tax from the date the tax was due until paid.

41.06 (B) Failure to pay any tax when due or failure to file any required return shall result in the assessment of a penalty of 5% per month of the delinquent tax, not to exceed a total penalty of 25%. In no event shall the penalty for failure to file a return be less than $15.

41.06 (C) In the case of a fraudulent return or a willful intent to evade payment of the tax, the seller making such fraudulent return or willfully attempting to evade payment of the tax shall be liable for a specific penalty of 100% of the tax.

CHAPTER 42. HOMESTEAD EXEMPTION.

§ 42.01 ADDITIONAL HOMESTEAD EXEMPTION.

42.01 (A) ***Requirements to obtain additional homestead exemption.*** Any Person who meets each of the requirements set forth below shall be eligible for an additional homestead exemption in the amount of $50,000 in accordance with § 196.075, Florida Statutes:

42.01 (A)(1) The Person has legal or equitable title to the subject real estate;

42.01 (A)(2) The Person maintains upon such property the permanent residence of the Owner;

42.01 (A)(3) The Person has attained the age of 65;

42.01 (A)(4) The applicable household income does not exceed $20,000, as adjusted pursuant to (C) below; and

42.01 (A)(5) The taxpayer claiming the above exemption submits annually to the Broward County Property Appraiser, not later than March 1 of each year, a sworn statement of household income on a form prescribed by the Florida Department of Revenue. The filing of this statement must be supported by copies of any federal income tax returns for the prior year, any wage and earnings statements (W-2 forms), and any other documents required by the Florida Department of Revenue for each member of the household, to be submitted by June 1 of each year. The taxpayer's statement shall attest to the accuracy of such copies. The Property Appraiser may not grant the exemption without the required documentation.

42.01 (B) ***Application of Homestead Exemption.*** Pursuant to and in accordance with § 196.075, Florida Statutes, the additional homestead exemption as set forth in this Section shall apply to all ad valorem property taxes levied by the City, including, dependent special districts and municipal service taxing units.

42.01 (C) ***Household income.*** For the purposes of subparagraph (A)(4) above, beginning January 1, 2001, the $20,000 household income limitation shall, as prescribed by § 196.075, Florida Statutes, be adjusted annually, on January 1 of each year by the percentage change in the average cost-of-living index in the period January 1 through December 31 of the immediately prior year compared with the same period for the year prior to that. The index is the average of the monthly consumer price index figures for the stated 12-month period, relative to the United States as a whole, issued by the United States Department of Labor.

42.01 (D) ***Joint title.*** If title is held jointly with right of survivorship, the Person residing on the property and otherwise qualifying may receive the entire amount of the additional homestead exemption.

CHAPTER 43. ADMINISTRATIVE REVIEW AND COST RECOVERY.

§ 43.01 APPLICABILITY OF THE COST RECOVERY PROGRAM.

The cost recovery program shall apply to all review requests unless specifically exempt pursuant to State or Federal Law.

§ 43.02 FEE IMPOSED.

There is hereby imposed an administrative fee for the various costs of the City's administrative and outside fee consultant processing and review of applications, submissions, or requests concerning Development, utilization, or improvement of real estate in the City (including, but not limited to, review and processing of plat applications, applications for site data records, proposed on-site and off-site water distributions/transmission main and Sewer collection/Force Main facilities, installation of utility lines and pipes, land use plan proposed amendments, planned or existing Street, pavement, Sidewalk, Street marker Signs, seawall, bridge installation, culvert or Drainage facilities, modifications to site plans, applications for use variances, applications for physical development variances, all Building inspections, applications for and periodic review of development of regional impact orders, document review in Developments involving unified control, a change in zoning, pre- and post-permit conferences and project reviews (specifically including, but not limited to, the Development, monitoring, and completion of critical path governmental approval reports and all review and monitoring incident to or in any way related to such reports), and certain Building plan and bridge installation plan reviews and inspections (hereafter, “review requests”), such fee to be equal in amount to the City's actual costs, in terms of staff and outside fee consultants' time expended in such review and processing.

§ 43.03 INITIAL DEPOSIT.

43.03 (A) ***Deposit Required.*** Persons who file any review request that necessitates administrative or outside fee consultant review and processing shall pay, prior to or at the time the review request is made, an initial preliminary deposit that shall be credited toward the fee charged for such review and processing, and shall pay additional deposits as may be required from time to time.

43.03 (B) ***Deposit Amount.*** The amount of the initial deposit for the different types of review requests shall be established, and from time to time amended, by resolution of the City Commission. It is the express intent of the City Commission in enacting this cost recovery program that the City's costs of administrative and outside fee consultant review and processing of review requests, as required or necessitated now or in the future by the City's ordinances, resolutions, policies, or procedures, shall be borne by the Person initiating the review request.

§ 43.04 PROJECT ACCOUNTS; SUPPLEMENTAL DEPOSITS.

43.04 (A) ***Project accounts.*** When the Person pays the initial deposit, a financial account for said Person's review request (the “project account”) will be opened and maintained throughout the entire review process until the Person receives a Certificate of Occupancy, the Building and Zoning Department determines that no further action is necessary for the review and

processing of the review request, or the Applicant voluntarily withdraws. At any of these times the project account will be closed and any remaining funds therein shall be refunded to the Person depositing same no later than six months after the project accounts closing date. The project account will be monitored on a periodic basis.

43.04 (B) ***Supplemental deposits.*** Whenever the account balance is zero or negative, a supplemental deposit will be required before any further review or processing continues. The Person making the initial deposit will be notified when a supplemental deposit will be required. Several supplemental deposits may be necessary depending on the complexity of the review request.

43.04 (C) ***Notification.*** Except as provided herein, any notification provided in this Section for supplemental deposits from the City to a Person initiating a review request shall be deemed sufficient if made by written notification. It shall be the duty of Persons initiating review requests to provide on the filed review request a continuously updated address where said Persons or their agents can be notified. If an attempt to notify a Person initiating a review request or his or her agent is frustrated because such addresses were not correct or up to date when the notification attempt was made, such frustrated attempt shall be deemed sufficient notice for purposes of this Section.

§ 43.05 RECORDS OF ADMINISTRATIVE WORK PERFORMED.

43.05 (A) The staff of the various departments of the City and the City's outside fee consultants who are involved in the review and processing of review requests shall maintain records of the time expended and tasks conducted regarding each such request.

43.05 (B) A debit based upon the time expended and the applicable hourly rate shall be charged against the project account.

43.05 (C) For purposes of this program, the applicable hourly rate shall be equal to a staff person's actual hourly rate of pay (if such person is paid by the hour) or an approximation of his or her hourly compensation (based upon a weekly salary divided by 40 hours, together with an additional factor reflecting said person's hourly value of fringe and pension benefits), if said staff person is a person who is compensated on a salary basis.

43.05 (D) The applicable hourly rate for review and processing by the City's outside fee consultants shall equal their actual hourly charge for such review and processing.

43.05 (E) A debit against the project account shall also be made that shall reflect the costs of administering this program and for the City’s legal services. All records of time expended, together with the corresponding costs, shall be provided to the City Manager.

CHAPTER 44. TECHNICAL RESCUE AND HAZARDOUS SUBSTANCES COST RECOVERY.

§ 44.01 RECOVERY OF COSTS FOR TECHNICAL RESCUES AND HAZARDOUS SUBSTANCE RESPONSES.

44.01 (A) ***Liability for Costs Incurred.***

44.01 (A)(1) Each Person that discharges, releases or disseminates any hazardous substance within the City, and each Person that owns or is in authorized possession of a Structure, Building or property located within the City, to which any City personnel, agents or contractors respond in connection with a Hazardous Substance or Technical Rescue Incident or due to a report of the presence of a Hazardous Substance or a combination of both, whether or not the response is ultimately deemed necessary to effect a rescue or abate a hazard, shall be liable, jointly and severally, to the City for all costs incurred that are associated with such effort, including but not limited to the costs of use of vehicles, equipment, materials and personnel, and shall be deemed to have committed an act punishable as provided in § 2.99 of the Code.

44.01 (A)(2) The provisions of this Section shall only apply to any Person that violates any Law, rule or regulation of any governmental entity, or whose act or omission to act is intentional, negligent, or occurs as a result of the existence of any defective or faulty machinery, mechanism or equipment of any kind.

44.01 (B) ***Invoices.*** All responsible Persons shall pay all costs under this Section within 45 days after the City provides an itemized invoice to the responsible Person.

44.01 (C) ***Liens for unpaid invoice.*** Any invoice that remains unpaid for a period of more than 90 days after submission may, at the option of the City, be filed in the public records of Broward County as a lien against the land, which was the subject of the response and enforced by foreclosure proceedings. Such lien shall, subject to the provisions of the Florida Constitution and Florida Law, continue for a period of 20 years and be coequal with the lien of all State, county, district and municipal taxes, superior in dignity to all other liens, titles and claims (regardless of when created or recorded, if recorded) until paid.

CHAPTER 45. PAYMENTS RECEIVED BY THE CITY.

§ 45.01 PROCEDURE UPON RECEIPT OF PAYMENTS.

§45.01 (A) ***Partial payments***. Payments submitted to the City in an amount less than the full amount due to the City, which amount may include past due payment obligations, penalties and fees, shall be deemed a "partial payment" and shall be processed in accordance with this Section.

§45.01 (B) ***Acceptance not deemed satisfaction of debt***. The City's acceptance of any partial payment shall not constitute satisfaction of any debt or payment.

§45.01 (C) ***Priority of payment.*** Funds received as partial payment of a debt shall be allocated in the following order:

(1) Past due payment obligations; then

(2) Penalties and late fees; then

(3) New payment obligations.

§ 45.02 COST RECOVERY FOR VERIFICATION OF PROPER PAYMENT RECEIVED.

45.02 (A) ***Receipts.*** If verification of proper payment is necessary, the City may issue a receipt acknowledging delivery of currency, but shall not issue a receipt acknowledging that the proper payment has been received until the City receives confirmation of the proper amount received.

45.02 (B) ***Administrative costs.*** The City Manager is authorized to charge Persons submitting payments to the City with the actual costs incurred by the City, if any, for currency transportation and for verification that the City has received proper payment from such Person.

CHAPTER 46. LIENS.

§ 46.01 PRIORITY OF CITY LIENS.

46.01 (A) ***Intent.*** This Section is not to be read in conflict with pertinent State law or City or county ordinances pertaining to the placing of liens or levying of assessments by municipalities for any reason, or the enforcement of same through foreclosure proceedings. This Section shall apply to every action filed after the effective date of this Section, without regard to the date on which the cause of action accrued.

46.01 (B) ***Exception for code enforcement liens.*** Code enforcement liens are governed by Chapter 31 of this Code and shall not be subject to the provisions of this §46.01.

46.01 (C) ***Placement of lien for charges, special assessments.***

46.01 (C)(1) The City shall have a lien on all lands or premises situated within the City limits for all charges or special assessments levied against that property for improvements made thereto or lienable services rendered thereon, until paid in full. All such unpaid costs and liens shall bear interest at the rate provided for in Florida Statutes § 55.03(1) regarding interest on judgments, and said interest shall accrue until paid in full. These liens shall be superior and prior to all other liens with the exception of State, county, and municipal tax liens when notice of the lien has been filed in the Public Records of Broward County.

46.01 (C)(2) The notice of lien statement shall contain a legal description of the Premises, the expenses and costs incurred, the date of such expenses, notice that the City claims a lien for this amount, and notice that interest on the unpaid charges shall accrue at the rate provided for in Florida Statutes § 55.03(1) for interest on judgments. A copy of the notice of lien shall be mailed to the Owner of the property, if the mailing address of the Owner is available.

46.01 (D) ***Foreclosure.***

46.01 (D)(1) Any liens placed against real property pursuant to this Section may be foreclosed upon by the City in the manner provided by State law for the foreclosure of mortgages on property, if the lien remains unpaid for 30 days after it has been recorded in the Public Records of Broward County.

46.01 (D)(2) The costs incurred for collection, including legal fees and costs related to a foreclosure action, shall be recovered along with all amounts due to the City under the lien. In any action filed by the City to enforce a City lien, the City shall be entitled to recover reasonable attorneys' fees in addition to all other amounts secured by the lien.

TITLE V: PUBLIC SAFETY

CHAPTER 50. FIRE AND SAFETY.

§ 50.01 LOCK BOXES.

50.01 (A) ***Installation of lock box***. In all new and existing Buildings and at gated entrances to communities, condominium complexes, apartment complexes, industrial/commercial complexes, or other facilities providing limited access, there shall be installed a lock box when the Fire Chief determines that access to or within a Structure or an area is unduly difficult because of secured openings, or where immediate access is necessary for life-saving or fire-fighting purposes. The lock box shall be a type approved by the Fire Chief, and shall contain:

50.01 (A)(1) Keys to locked points of ingress, whether on the interior or exterior of such Buildings, complexes, or facilities.

50.01 (A)(2) Keys to locked mechanical equipment rooms.

50.01 (A)(3) Keys to locked electrical rooms.

50.01 (A)(4) Keys to elevator controls.

50.01 (A)(5) Keys to other areas as directed by the Fire Chief.

50.01 (B) ***Change of keys.*** If at any time the keys stored in the lock box change, then the Building Owner or manager is to notify the Fire Department and supply new keys to the Fire Chief.

50.01 (C) ***Location determination.*** The Fire Chief shall determine the location of lock boxes.

50.01 (D) ***Exemptions.*** This Section shall not apply to the Construction, improvement, or renovation of any Single-Family residential Building, with the exception of entrance gates.

§ 50.02 HAZARDOUS MATERIALS INFORMATION BOXES.

50.02 (A) ***Contents.*** In addition to the keys provided for in §50.01, all new and existing Buildings where the occupant is required to possess a hazardous materials license issued by Broward County shall be required to install a separate hazardous materials information box. The hazardous materials information box shall be a type approved by the Fire Chief and shall contain:

50.02 (A)(1) A copy of all hazardous materials licenses.

50.02 (A)(2) A copy of all Manufacturer's Safety Data Sheets (MSDS) for materials stored within the Building.

50.02 (A)(3) A copy of the hazardous materials spill incident management plan.

50.02 (B) ***Change of information.*** If at any time the information stored in the lock box changes, then the Building Owner or manager is to notify the Fire Department.

50.02 (C) ***Location determination.*** The Fire Chief shall determine the location of lock boxes.

50.02 (D) ***Exemptions.*** This Section shall not apply to the Construction, improvement, or renovation of any Single-Family residential Building.

REMOTE CONTROL ACCESS

§ 50.15 GATED COMMUNITIES.

50.15 (A) ***Remote control system requirement***. Gated communities within the City shall install, at their expense, a remote control system at each entry point into their community in compliance with this Section.

50.15 (B) ***System specifications.*** The remote control system required by this Section is the "LinearAccess Pro Receiver/Transmitter System," or any compatible system that meets the following specifications:

50.15 (B)(1) Wireless based systems;

50.15 (B)(2) Gate operators are capable of remote activation from a distance of up to 250 feet by the use of a radio-frequency, programmable transmitter;

50.15 (B)(3) Transmitters are block-coded into the access Pro Receiver, or compatible receiver;

50.15 (B)(4) Transmitters are capable of individual deletion from the system at any time;

50.15 (B)(5) Outputs:

50.15 (B)(5)(a) Relay: two form "C" relays, related at 1 amp @ 2 volts ac or dc;

50.15 (B)(5)(b) LED display: three eight-segment displays to provide system activity and programming information;

50.15 (B)(5)(c) LED indicators: front panel indicators are used in conjunction with LED display to provide transmitter and radio activity;

50.15 (B)(6) Inputs:

50.15 (B)(6)(a) RF: integral 318 MHz super regenerative receiver with -94 dBm sensitivity (nominal); receives MegaCode format transmitters;

50.15 (B)(6)(b)Open request terminal: contact closure to ground activates access relay;

50.15 (B)(6)(c)Open button: pressing activates access relays; also used to clear trouble codes from MGT;

50.15 (B)(6)(d)Keypad: integral 15-key silicone rubber keypad for system programming and interrogation;

50.15 (B)(7) Power: 12 to 24 volts ac or dc, 250 mA maximum.

50.15 (C) ***Access for Public Safety Personnel.*** Public Safety Personnel shall be authorized to gain access to any gated community within the City to perform the duties of such Public Safety Personnel in accordance with Law.

50.15 (D) ***Maintenance.*** Maintenance of the installed remote control system(s) shall be the responsibility of the community where it/they are installed.

FIRE PREVENTION CODE

§ 50.50 INSPECTORS; FIRE PREVENTION BUREAU/DIVISION OF FIRE AND LIFE SAFETY ESTABLISHED.

50.50 (A) The Fire Chief shall be responsible for the enforcement of the Florida Fire Prevention and Life Safety Codes. The Fire Chief may designate, subject to the approval of the City Manager, qualified members of the Fire Department as Inspectors from time to time.

50.50 (B) The Fire Chief shall designate, subject to the approval of the City Manager, a fire code official as Fire Marshal. The Fire Marshal shall be responsible for the direct administration and enforcement of the Florida Fire Prevention and Life Safety Codes under the direction and supervision of the Fire Chief. The Fire Chief may also designate, subject to the approval of the City Manager, such number of fire Inspectors or Inspector technicians, as shall from time to time be deemed necessary.

§ 50.51 DUTIES OF FIRE MARSHAL.

50.51 (A) It shall be the duty of the Fire Marshal to enforce all applicable Laws and codes. In addition, the Fire Marshal shall participate in public education in fire and life safety.

50.51 (B) The Fire Marshal shall have such other powers and perform such other duties as are set forth in other sections of this Chapter and as may be conferred and imposed from time to time by Law. The Fire Chief may delegate any powers and duties under this Chapter to the Fire Marshal.

§ 50.52 AUTHORITY FOR INSPECTIONS.

In addition to required inspections under State Law, the Fire Chief, Fire Marshal or any Inspectors, upon complaint of any Person or whenever deemed necessary, shall inspect all Buildings and Premises within their jurisdiction.

§ 50.53 ANNUAL FIRE SAFETY PERMIT/INSPECTION FEES.

The City is hereby authorized to include a fire safety permit/Inspection fee in the City's annual fire Assessment against Buildings and Structures within the City to provide funding for the cost of providing such fire safety Inspection services in accordance with State Law.

§ 50.54 FIRE SAFETY PERMITS, LICENSES, SERVICE FEES AND PLAN REVIEW FEES.

The City is hereby authorized to collect permits, licenses, service and plan review fees to recover costs associated with such services and work. Fire safety service and plan review fees shall be set by a resolution of the City Commission. The City administration shall be authorized to adopt administrative policies regarding the collection of the following fees which will be based on federal, State, Broward County and City recognized reimbursement for costs for apparatus equipment and actual or average costs for all City personnel, subcontractors and other City departments requested by fire-rescue.

CHAPTER 51. AUTOMATED EXTERNAL DEFIBRILLATORS.

§ 51.01 INTENT.

It is the intent of the City and the purpose of this Chapter:

51.01 (A) To promote the public health, safety, and general welfare by requiring the installation of Automated External Defibrillator Devices within certain Buildings in the City;

51.01 (B) To provide for the Inspection of each Automated External Defibrillator Device within the City; and

51.01 (C) To provide for the payment of Automated External Defibrillator Inspection fees.

§ 51.02 AUTOMATED EXTERNAL DEFIBRILLATOR DEVICES REQUIRED.

Automated External Defibrillator Devices shall be installed in the following Buildings located within the geographical boundaries of the City:

51.02 (A) Places of Public Assembly as defined in the Florida Building Code;

51.02 (B) Office Buildings in excess of 20,000 square feet;

51.02 (C) Gymnasiums, fitness centers and indoor recreational centers in excess of 1,500 square feet;

51.02 (D) Restaurants with 100 or more seats including indoor, Outdoor and Bar;

51.02 (E) Commercial and retail spaces in excess of 35,000 square feet; and

51.02 (F) All Hotels and Motels.

§ 51.03 INSTALLATION AND OPERATION.

51.03 (A) ***Time of inspections.*** The City shall inspect all Automated External Defibrillator Devices for operation prior to being placed in service or available for use, and on an annual basis.

51.03 (B) ***Requirements.*** Automated External Defibrillator Devices shall be:

51.03 (B)(1) Conspicuously located in plain view of the primary public entrance, with unobstructed access;

51.03 (B)(2) Housed in a cabinet with a clear window in the door, an audible alarm signaling the opening of the door, permanently affixed to a wall, and whose top is no more than 48 inches above the floor;

51.03 (B)(3) Located below a Sign having a minimum area of 70 square inches and containing the letters "AED" and the universally recognizable "AED" symbol, which shall be placed no more than 60 inches, on center, above the floor;

51.03 (B)(4) Readily accessible and immediately available when needed for On-Site employees and the general public, including disabled Persons; and

51.03 (B)(5) Placed near the elevator(s) in the first floor lobby, if the Building contains an elevator.

51.03 (C) ***Content requirement.*** Automated External Defibrillator Devices shall contain adult and pediatric pads and bandage scissors.

51.03 (D) ***Manufacturer's guidelines.*** All Automated External Defibrillator Devices shall be used in accordance with manufacturer's guidelines.

51.03 (E) ***Owner's responsibilities.*** It shall be the responsibility of the Owner of the Building to:

51.03 (E)(1) Install Automated External Defibrillator Devices;

51.03 (E)(2) Provide all necessary training for appropriate use; and

51.03 (E)(3) Maintain Automated External Defibrillator Devices in accordance with the manufacturer's recommended maintenance requirements and as required herein.

51.03 (F) ***Replacement.*** If an Automated External Defibrillator Device is removed for repair, a replacement shall be provided.

§ 51.04 FEES.

Fees for Automated External Defibrillator Device permits and inspections shall be set by resolution.

§ 51.05 VIOLATIONS.

51.05 (A) ***Inoperative.*** No Person shall render an Automated External Defibrillator Device inoperative except during such time as the Automated External Defibrillator Device is being serviced, tested, repaired, or recharged, or except pursuant to court order.

51.05 (B) ***Obliterate serial number.*** No Person shall obliterate the serial number on an Automated External Defibrillator Device for purposes of falsifying service records.

51.05 (C) ***Improperly service.*** No Person shall improperly service, recharge, repair, test, or inspect an Automated External Defibrillator Device.

51.05 (D) ***Improper use of certificate.*** No Person shall use the inspection certificate of another Person.

51.05 (E) ***Hold inspection certificate.*** No Person shall hold an inspection certificate and allow another Person to use said inspection certificate number.

§ 51.06 RESTRICTIONS ON LOCKED STAIRWELLS.

51.06 (A) ***Scope.*** This Section shall apply only to the following Buildings:

51.06 (A)(1) Places of Public Assembly as defined in the Florida Building Code;

51.06 (A)(2) Office Buildings in excess of 20,000 square feet;

51.06 (A)(3) Gymnasiums, fitness centers and indoor recreational centers in excess of 1,500 square feet;

51.06 (A)(4) Restaurants with 100 or more seats including indoor, Outdoor and Bar;

51.06 (A)(5) Commercial and retail spaces in excess of 35,000 square feet; and

51.06 (A)(6) All Hotels and Motels.

51.06 (B) ***Prohibition.*** No Person shall lock and no Building Owner and/or manager shall allow to be locked any door to a stairwell during the Building's normal business hours. The normal business hours of a Building for each day shall begin upon the earliest opening of a unit within the Building for business and shall end with the latest closing of a unit that day.

51.06 (C) ***Exemptions.*** The prohibition set forth in subsection (B) shall not apply to:

51.06 (C)(1) The restriction of ingress through the locking of a door to a stairwell that opens on the outside of the Building; and

51.06 (C)(2) The restriction of ingress and egress through the locking of a door or other access point to a stairwell that opens to the Roof of the Building.

51.06 (D) ***Compliance.*** Persons receiving a Notice of Violation pursuant to this Section shall have five days to correct the violation.

CHAPTER 52. PROHIBITED ACTS.

§ 52.01 ADOPTION OF STATE OFFENSES AND COUNTY ORDINANCES.

52.01 (A) ***State misdemeanors.*** It shall be unlawful for any Person to commit, within the corporate limits of the City, any act that is or shall be recognized by the Laws of the State as a misdemeanor.

52.01 (B) ***Broward County misdemeanors.*** It shall be unlawful for any Person to commit, within the corporate limits of the City, any act that is or shall be recognized as a violation of any Broward County ordinance that is effective within the City.

52.01 (C) ***Penalties.*** Any Person convicted of violating this Section, regardless of whether adjudication is withheld, shall be punished in accordance with the penalty clause of the State Statute that the Person was convicted or violating.

§ 52.15 SWIMMING AND BOATING IN LAKES AND CANALS PROHIBITED.

52.15 (A) ***Swimming.*** No Person shall swim, wade or bathe in any lakes or canals within the City.

52.15 (B) ***Boating.*** No Person shall bring into or operate any boat, canoe, or other watercraft in any lakes or canals within the City.

§ 52.16 OPEN BURNING PROHIBITED.

52.16 (A) ***Outdoor fires.*** No Person shall ignite, cause to be ignited, permit to be ignited, allow, burn or maintain any Outdoor fire.

52.16 (B) ***Exemptions.*** The following activities, uses and devices shall be exempt from the prohibitions contained in subsection (A), if and only if they are conducted or used in a safe and responsible manner:

52.16 (B)(1) Outdoor, noncommercial preparation of food;

52.16 (B)(2) Tiki torches;

52.16 (B)(3) Patio fireplaces;

52.16 (B)(3) Prescribed burns conducted by the City Fire Department; and

52.16 (B)(4) Training exercises conducted by the City Fire Department.

§ 52.17 LOITERING PROHIBITED.

52.17 (A) ***Prohibition.*** It is unlawful for any Person to Loiter or prowl in a place, at a time or in a manner not usual for law-abiding individuals, under circumstances that warrant a justifiable and reasonable alarm or immediate concern for the safety of Persons or property in the vicinity.

52.17 (B) ***Circumstances; duty of Law Enforcement Officer.*** Among the circumstances that may be considered in determining whether such an alarm or immediate concern is warranted is the fact that the Person takes flight upon appearance of a Law Enforcement Officer, refuses to identify himself or herself, or manifestly endeavors to conceal himself or herself or any object. Unless flight by the Person or other circumstances makes it impracticable, a Law Enforcement Officer shall, prior to any arrest for an offense under this Section, afford the Person the opportunity to dispel any alarm or immediate concern that would otherwise be warranted by requesting the Person to identify himself or herself and explain his or her presence and conduct. No Person shall be convicted of an offense under this Section if the Law Enforcement Officer did not comply with this procedure or if it appears at trial that the explanation given by the Person is true and, if believed by the Officer at the time, would have dispelled the alarm or immediate concern.

52.17 (C) ***Loitering after warning; obstructing free passage.*** It shall be unlawful for any Person, after first being warned by a Law Enforcement Officer, or where a "no Loitering" Sign or Signs have been posted, to Loiter, stand, sit or lie in or upon public or quasi-public Sidewalk, Street, curb, crosswalk, walkway area, mall or that portion of Private Property utilized for public use, so as to hinder or obstruct unreasonably the free passage of pedestrians or vehicles thereon; nor shall any Person block or obstruct or prevent the free access to the entrance to any Building open to the public.

52.17 (D) ***Signage.*** It shall be the responsibility of Persons owning or occupying places of business within the City to post "No Loitering" Signs at each public entrance to the property. The Sign shall be at least 12 inches by 18 inches, and shall read as follows: "No Loitering - Weston City Code § 52.17."

LITTERING

§ 52.25 STREETS, SIDEWALKS, AND OTHER PUBLIC PLACES.

No Person shall throw, deposit or dump Litter in or upon any Street, Sidewalk, or other Public Place within the City except in public receptacles, in Authorized Private Receptacles for collection, or in county or municipal dumps.

§ 52.26 RECEPTACLES TO BE SECURE.

No Person placing Litter in public receptacles or in Authorized Private Receptacles shall do so in such a manner as to allow it to be carried or deposited by the elements upon any Street, Sidewalk, or other Public Place or upon Private Property.

§ 52.27 GUTTERS.

No Person shall sweep into or deposit in any gutter, Street, or other Public Place within the City the accumulation of Litter from any Building or Lot or from any public or private Sidewalk or driveway. Persons owning or occupying property shall keep the Sidewalk in front of and surrounding their Premises free of Litter.

§ 52.28 MOTOR VEHICLE OCCUPANTS.

No Person, while a driver or passenger in a vehicle, shall throw or deposit Litter upon any Street or other Public Place within the City, or upon Private Property, except in public or Private Receptacles.

§ 52.29 TRUCKS AND OTHER VEHICLES.

No Person shall drive or move any truck or other vehicle within the City unless such vehicle is so constructed or loaded as to prevent any load, contents, or Litter from being blown or deposited upon any Street, alley, or other Public Place or upon Private Property. Nor shall any Person drive or move any vehicles or truck within the City, the wheels or tires of which carry onto or deposit in any Street, alley, or other Public Place Litter or foreign matter of any kind.

§ 52.30 WATER BODIES.

No Person shall throw, deposit, or dump Litter in any fountain, pond, lake, stream, bay, canal, or any other body of water within the City.

§ 52.31 HANDBILLS.

52.31 (A) ***Throwing or depositing Commercial and Noncommercial Handbills in Public Places; prohibition.*** No Person shall throw or deposit any Commercial or Noncommercial Handbill in or upon any Sidewalk, Street, or other Public Place within the City. Provided, however, that is shall not be unlawful on any Sidewalk, Street, or other Public Place within the City for any Person to hand out or distribute, without charge to the receiver thereof, any Commercial or Noncommercial Handbill to any Person willing to accept it, except to the extent prohibited by § 71.10.

52.31 (B) ***Placing Commercial and Noncommercial Handbills on vehicles; prohibition.*** No Person shall throw or deposit any Commercial or Noncommercial Handbill in or upon any unoccupied vehicle. Provided, however, that it shall not be unlawful in any Public Place for a Person to hand out or distribute, without charge to the receiver thereof, a Commercial or Noncommercial Handbill to any occupant of a vehicle who is willing to accept it, except to the extent prohibited by § 71.10.

52.31 (C) ***Prohibiting distribution of handbills where properly posted; prohibition.*** No Person shall throw, deposit, or distribute any Commercial or Noncommercial Handbill upon any Private Premises if requested by anyone thereon not to do so, or if there is placed on said Premises in a conspicuous position near the entrance thereof a Sign bearing the words "No

Trespassing," "No Solicitors," "No Peddlers or Agents," "No Advertisement," or any similar notice indicating in any manner that the occupants of said Premises do not desire to be molested or have their right of privacy disturbed, or to have any such handbills left upon such Premises.

52.31 (D) ***Distributing Commercial and Noncommercial Handbills at inhabited Private Premises; prohibition.***

52.31 (D)(1) No Person shall throw, deposit, or distribute any Commercial or Noncommercial Handbill in or upon Private Premises that are inhabited, except by handing or transmitting any such handbill directly to the Owner, occupant, or other Person then present in or upon such Private Premises. Provided, however, that in case of inhabited Private Premises that are not posted, as provided in this Section, such Person, unless requested by anyone upon such Premises not to do so, may place or deposit any such handbill in or upon such inhabited Private Premises if such handbill is so placed or deposited as to secure or prevent such handbill from being blown or drifted about such Premises or Sidewalks, Streets, or other Public Places, except that mailboxes may not be so used when so prohibited by federal postal Law or regulations.

52.31 (D)(2) The provisions of this subsection (D) shall not apply to the distribution of mail by the United States Postal Service, nor to newspapers; except that newspapers shall be placed on Private Property in such a manner as to prevent their being carried or deposited by the elements upon any Street, Sidewalk, or other Public Place or upon Private Property.

§ 52.32 UTILITY POLES, PUBLIC STRUCTURES, AND PUBLIC BUILDINGS.

No Person shall post or affix any notice, poster, or other paper or device calculated to attract the attention of the public to any public Utility Pole, or upon any public Structure or Building, except as may be authorized or required by Law.

§ 52.33 PRIVATE PROPERTY.

52.33 (A) ***Occupied Private Property.*** No Person shall throw, deposit, or dump Litter on any occupied Private Property within the City, whether owned by such Person or not; except that the Owner or Person in control of Private Property may maintain Authorized Private Receptacles for collection in such a manner that Litter will be prevented from being carried or deposited by the elements upon any Street, Sidewalk, or other Public Place or upon any Private Property.

52.33 (B) ***Vacant Lots.*** No Person shall throw, deposit or dump Litter on any open or vacant Private Property within the City, whether owned by such Person or not.

52.33 (C) ***Owner to maintain Premises free of Litter.*** The Owner or Person in control of any Private Property shall at all times maintain the Premises free of Litter; provided, however, that this Section shall not prohibit the storage of Litter in Authorized Private Receptacles for collection.

SEXUAL VIOLATORS

§ 52.45 SEXUAL VIOLATOR RESIDENCY PROHIBITION.

52.45 (A) ***Residency restrictions.*** It is unlawful for any Sexual Violator, as that term is defined in the Code, to reside within 2,500 feet of any school, day care center, Public School bus stop, park or playground.

52.45 (B) ***Owner and landlord responsibility.*** It shall be a violation of the City Code for a landlord or Owner of Residential Property in the City to rent or lease a residence to a Sexual Violator, if the Sexual Violator intends to reside at the property and if the property is located within 2,500 feet of a school, day care center, Public School bus stop, park or playground, unless the landlord or Owner can establish that, prior to entry of a lease, he or she used reasonable due diligence and was unable to determine that the Tenant is a Sexual Violator. Any Person violating this provision is subject to the code enforcement procedures set forth in Chapter 31.

52.45 (C) ***Exemptions.***

52.45 (C)(1) The provisions of subsection (A) of this Section shall not prohibit a Person who is registered with the State of Florida as a Sexual Violator, sexual offender or sexual predator whose FDLE Sexual Violator registration records show an address within the City on July 5, 2005 from continuing to reside at the address even if it is within 2,500 feet of any school, day care center, Public School bus stop, park or playground, provided that no other address(es) located outside of the City is registered with the FDLE for more than a combined consecutive 365 days.

52.45 (C)(2) The provisions of subsection (A) shall not prohibit a Person who is registered with the State of Florida as a Sexual Violator, sexual offender or sexual predator from continuing to reside at his or her registered address solely because a school, day care center, Public School bus stop, park or playground is subsequently built or established within 2,500 feet of his or her registered address.

NOISE

§52.50 LOUD AND RAUCOUS NOISE; EXEMPTIONS.

52.50 (A) ***Violation.*** It shall be unlawful for any Person to willfully make, continue, or cause to be made or continued any Loud and Raucous Noise, which term shall mean any sound which, because of its volume level, duration, character, and time of day annoys, disturbs, injures, or endangers the comfort, health, peace, or safety of reasonable Persons of ordinary sensibilities within the limits of the City. The term includes the kind of noises prohibited by the activities enumerated in §52.52. The term also includes the kinds of noises generated by the activities enumerated in § 52.52. The term shall be limited to Loud and Raucous Noise heard upon the public and private Streets, upon other public lands or waters, in any public or private park, in any school or public Building or upon the grounds thereof while in use, in any house of worship or hospital or upon the grounds thereof while in use, upon any parking lot open to

members of the public as invitees or licensees, or heard in any occupied commercial or residential unit or upon the grounds thereof. The terms "loud or disturbing", "annoyance or inconvenience," "disturb the peace and quiet", and other like terms referring to noise where used in other Sections of this subchapter shall be construed to mean "Loud and Raucous." The terms "inhabitants" and "occupants" and other like terms where used in other sections of this subchapter shall be construed to mean reasonable Persons of ordinary sensibilities.

52.50 (B) ***Responsible parties.*** Any Person, Owner, agent, or supervisor in charge of operating, ordering, directing, or allowing the operation or maintenance of a device or machine creating Loud and Raucous Noise as prohibited in this subchapter shall be deemed guilty of committing an offense and violating this subchapter and be subject to the penalties provided in § 2.99.

52.50 (C) ***Exemptions.*** The term Loud and Raucous Noise does not include noise or sound generated by the following:

52.50 (C)(1) Cries for emergency assistance and warning calls.

52.50 (C)(2) Radios, sirens, horns, and bells on police, fire, and other emergency response vehicles.

52.50 (C)(3) Activities on or in municipal and school facilities and on or in other publicly owned property and facilities, provided that such activities have been authorized by the Owner of such property or facilities or its agents.

52.50 (C)(4) Religious worship activities, including but not limited to bells and organs.

52.50 (C)(5) Any City services, including but not limited to sanitation and Refuse collection and Utility repairs.

§ 52.51 COMPLAINTS.

52.51 (A) Any citizen wishing to register a complaint of Loud or Raucous Noise in violation of the provisions of this subchapter shall be required to sign a sworn statement in order for a Law Enforcement Officer to investigate and cite an alleged offender.

52.51 (B) This requirement shall not preclude a Law Enforcement Officer from citing any alleged offender based on his or her own observations whether or not a complaint has been made.

§52.52 PROHIBITED NOISE.

Prohibited noise. The following acts prohibited:

52.52 (A) ***Engines.***

52.52 (A)(1) ***Exhaust.*** The discharge into the open air of the exhaust of any stationary internal combustion engine except through a muffler or other device that will effectively prevent Loud and Raucous Noises therefrom.

52.52 (A)(2) ***Pile drivers restricted hours.*** The operation between the hours of 6:00 p.m. and 8:00 a.m. on any day or at any time on Sunday, New Year's Day, Memorial Day, Independence Day, Labor Day, Thanksgiving Day, or Christmas Day of any pile driver, pneumatic hammer, derrick, dredge, electric hoist, or other appliance, the use of which is attended by Loud and Raucous Noise.

52.52 (A)(3) ***Blowers.*** The operation of any blower or power fan or any internal combustion engine, the operation of which causes Loud and Raucous Noise, unless the noise from such blower or fan is muffled or such engine is equipped with a muffler device sufficient to prevent Loud and Raucous Noise.

52.52 (B) ***Horns and signaling devices.*** The sounding of any horn, whistle, or other audible signaling device so as to create a Loud and Raucous Noise.

52.52 (C) ***Televisions, radios, amplifiers, and phonographs.*** The using or operating of, or permitting to be played, used, or operated, any television, radio, amplifier, musical instrument, phonograph, or other device for the producing or reproducing of sound in such manner as to cause Loud and Raucous Noise.

52.52 (D) ***Sound devices for advertising purposes.*** The operation in the City of any radio, television, or other musical or mechanical instrument or device of any kind whereby the sounds therefrom are cast directly upon public Streets and places and where such devices are maintained and operated for advertising purposes or for the purpose of attracting the passing public and that are so placed in any moving or non-moving wagon, truck, vehicle, or aircraft or in any stationary location whereby announcements or broadcasts are made, or music is played, unless a permit therefor shall have been granted by the City Manager.

52.52 (D)(1) Any Person desiring a permit shall make application to the City Manager for such permit. The application shall be accompanied by an application fee, the amount of which shall be set by resolution of the City Commission. If it shall appear to the City Manager that the issuance of such permit will not adversely affect the peace and quiet of the inhabitants of the City, or will not create a Traffic hazard, or will not be otherwise detrimental to the public safety, such permit shall be issued.

52.52 (D)(2) The City Manager is hereby given the power and authority to designate, if any permit is granted, the conditions of such permit, and such conditions shall be imposed so that the peace and quiet of the inhabitants of the City and public safety shall not be interfered with.

52.52 (D)(3) If any Person should be granted a permit in accordance with this Section and shall violate the terms and conditions thereof, the City Manager is hereby authorized to revoke the permit.

52.52 (E) ***Yelling and shouting.*** Yelling, shouting, whistling, or singing at any time or place so as to create a Loud and Raucous Noise between the hours of 10:00 p.m. and 7:00 a.m. the following day, on any day.

52.52 (F) ***Animals and birds.*** The keeping of any Animal, bird, or fowl that causes frequent or continued Loud and Raucous Noise.

52.52 (G) ***Defect in vehicle or load.*** The use of any Motor Vehicle so out of repair, so loaded, or in such manner as to create loud grating, grinding, rattling, or other Loud and Raucous Noise or that is not equipped with a muffler in good working order and in constant operation so as to prevent Loud and Raucous Noise.

52.52 (H) ***Noises to attract attention.*** The use of any drum or other instrument or device to create a Loud and Raucous Noise.

52.52 (I) ***Vehicle horns.*** The sounding of any horn or signal device, including anti-theft alarms, on any automobile, motorcycle, bus, or other vehicle: while not in motion, except as a danger signal if another vehicle is approaching apparently out of control; or while in motion, except as a danger signal after or as brakes are being applied and deceleration of the vehicle is intended. The sounding of any horn or signal device, including anti-theft alarms, on any vehicle whether or not in motion for an unnecessary and unreasonable period of time is hereby declared to be a Loud and Raucous Noise.

52.52 (J) ***Construction or repairing of Buildings or site Development.*** The erection (including Excavating), demolition, alteration, or repair of any Building so as to create a Loud and Raucous Noise other than between the hours of 7:00 a.m. and 7:00 p.m. on any weekday or Saturday. Such activity is prohibited on Sunday, New Year's Day, Memorial Day, Independence Day, Labor Day, Thanksgiving Day, or Christmas Day. In case of urgent necessity in the interest of public health and safety, a permit to allow activity prohibited by this Section may be granted by the City Manager for a period not to exceed three working days or less while the emergency continues. Such permit may be renewed for successive periods of three days or less while the emergency continues. If the City Manager should determine that the public health and safety necessitates the issuance of such a permit and will not be unduly impaired by the erection, demolition, alteration, or repair of any Building or the Excavation of Streets and Highways within the hours of 7:00 p.m. and 7:00 a.m. of the following day, or on Sunday, New Year's Day, Memorial Day, Independence Day, Labor Day, Thanksgiving Day, or Christmas Day, he or she may grant permission for such work to be done within such hours or within a shorter time period during such hours, upon application being made at the time the permit for the work is issued or during the progress of the work.

52.52 (K) ***Music.*** No Person licensed under the State beverage Law shall allow or permit, between the hours of 11:00 p.m. and 7:00 a.m. the following morning, instrumental music whether live from musicians or from recordings, singing, or other forms of entertainment in any room where beers, wines, Liquors, or other Alcoholic Beverages are sold or offered for sale, indoors or Outdoors, except when such room is soundproofed in order that the sounds therefrom may not disrupt the peace and quiet of the neighborhood.

It is intended hereby that in soundproofed rooms music, singing, and other forms of entertainment may be conducted during the hours that Alcoholic Beverages may be sold in accordance with § 83.01et seq.

52.52 (L) ***Pool pumps, fans, and air conditioners.*** It shall be unlawful to create any excessive and unnecessary Loud and Raucous Noise by the use or operation of any noise-creating air conditioner or compressor unit, the operation of which causes such excessive and unnecessary Loud and Raucous Noise, unless such noise is muffled and deadened by adequate noise suppression and muffling devices to eliminate annoyance and disturbance to Persons within the range of hearing.

52.52 (M) ***Loading, unloading, unpacking.*** It shall be unlawful for any Person engaged in loading, unloading, packing, unpacking, or opening crates, boxes, or containers, including, without limitation, the loading or unloading of any Motor Vehicles or truck Trailers onto any truck transport to create excessive and unnecessary Loud and Raucous Noises. It shall further be unlawful to leave diesel-powered or other engines idling, thereby creating Loud and Raucous Noises, between the hours of 10:00 p.m. and 6:00 a.m. of the following day.

52.52 (N) ***Outdoor Amusements.*** It shall be unlawful for the Owner of any Outdoor amusement or any Person employed at any such place to operate or conduct such business between the hours of 10:00 p.m. and 7:00 a.m. of each day, whereby Loud and Raucous Noise emitting therefrom disturbs the peace and quiet of Persons of any occupied Building.

52.52 (O) ***Fuel Stations.*** It shall be unlawful for the Owner of any Fuel Station located within 300 feet of any inhabited Dwelling, hospital or Hotel in the City, or any Person employed there at, to carry on or conduct any business that causes Loud and Raucous Noises between the hours of 11:00 p.m. and 6:00 a.m. of each day.

CHAPTER 53. ANIMAL CARE AND REGULATION.

§ 53.01 PURPOSE.

The intent of this Chapter is to ensure that dogs are subject to classification as "dangerous" upon the first instance of severely injuring or killing a human or a domestic Animal while off of its Owner's property, while adopting the remaining provisions of Section 4-2(k) of the Broward County Animal Care and Regulation Ordinance, Part II Code of Ordinances, Chapter 4 Animals and Fowl's definition of Dangerous Dog. Further, it is the intent of this Chapter to provide for Animal Control in the City, utilizing the Broward County Ordinance and the Broward County Division of Animal Care and Regulation's procedures and penalties to enforce this Chapter.

§ 53.02 DOGS AT LARGE PROHIBITED.

53.02 (A) ***At Large prohibition.*** It shall be a violation of this Section for any Person to permit any dog to be At Large as defined herein.

53.02 (B) ***Consent required.*** No dog shall be allowed to stray, run or go At Large upon any Public Property or Street, Sidewalk, Park, or on the Private Property of another without the consent of the property Owner.

53.02 (C) ***Capture.*** Any dog that is on Private Property without the consent of the property Owner or resident may be captured in a humane trap or otherwise humanely confined. A Person capturing an At Large dog will be responsible for the humane care of the dog until the captured dog is turned over to the Broward County Animal Care and Regulation Division, or other humane organization, or licensed wildlife trapper. A Person shall not entice a dog to become At Large for the purpose of trapping or apprehending when that dog would otherwise not be At Large.

53.02 (D) ***Confinement or leashing.*** Any Person confining or leasing a dog must do so in a manner that is not injurious to the dog's health.

53.02 (E) ***Direct Control.*** In order for a dog to be allowed on a public Street, road, Park or other Public Property unless otherwise specifically permitted, the dog shall be under the direct Control of the Owner or keeper, except while hunting pursuant to a permit or during an obedience demonstration, show, trial, training exercise, competition, show and/or match or educational program, so long as sufficient precautions are taken by the Owner of the dog and/or sponsor of the event to ensure the safety and protection of both the public and other Animals.

53.02 (F) ***Unprovoked attack.*** Any dog At Large that has attacked or bitten any Person or domestic Animal in an Unprovoked attack shall be in violation of this Section.

53.02 (G) ***Working dog exemption.*** At Large shall not include dogs actually working livestock, or dogs being trained to work livestock.

53.02 (H) ***Impoundment; citation.*** Any dog found by an Officer to be At Large may be seized and impounded and, as an alternative or in addition to impoundment, the Officer finding said dog At Large shall issue a citation as provided in Section 4-28 of the Broward County Animal Care and Regulation Ordinance, Part II Code of Ordinances, Chapter 4 Animals and Fowl.

§ 53.03 NUISANCE DOGS AND CATS.

53.03 (A) ***Trap.*** Any Person wishing to capture and remove a nuisance dog or cat from his or her property may obtain a live Animal trap from the Broward County Animal Care and Regulation Division, as provided in Section 4-4 of the Broward County Animal Care and Regulation Ordinance, Part II Code of Ordinances, Chapter 4 Animals and Fowl.

53.03 (B) ***Impoundment.*** Any Animal found to be a nuisance and removed to the Division shall be impounded in accordance with Section 4-5 of the Broward County Animal Care and Regulation Ordinance, Part II Code of Ordinances, Chapter 4 Animals and Fowl.

§ 53.04 CONFINEMENT DURING HEAT.

Any unspayed female dog or cat in heat (estrus) shall be confined during such period of time in a house, Building or secure enclosure. Said enclosure shall be constructed so that no other dog or cat may gain access to the confined Animal, except for intentional breeding purposes.

§ 53.05 PERMITTING ANIMAL TO COMMIT A NUISANCE.

53.05 (A) ***Defecation.*** No Person who owns or Harbors any Animal shall permit that Animal to defecate upon:

53.05 (A)(1) The Sidewalk of any public or private Street; or

53.05 (A)(2) Any Public Park, Public Property or Public School ground, other than in areas designated for that purpose; or

53.05 (A)(3) Any Private Property not belonging to the Owner of the Animal unless said Person makes an immediate effort to remove any feces deposited by the Animal; or

53.05 (A)(4) Any public or private Swale or Street Right-Of-Way serving to convey Storm Water to a canal, lake or other receiving water, unless said Person makes an immediate effort to remove any feces deposited by the Animal.

53.05 (B) ***Nuisance.*** The actions of an Animal constitute a nuisance when an Animal disturbs the rights of, threatens the safety of, or harms a member of the general public, or damages the property of others.

53.05 (C) ***Actions constituting nuisance.*** It shall be unlawful for any Person to own, keep, possess or maintain an Animal in such a manner so as to constitute a public nuisance. By way of example, and not of limitation, the following acts or actions by an Owner or possessor of an Animal are declared to be a public nuisance:

53.05 (C)(1) Allowing or permitting any Animal to habitually bark, whine, howl, crow, cackle or make other loud noise resulting in a serious annoyance or interference to the neighboring residents, continuously for a period of not less than ten minutes or

intermittently for a period of not less than 30 minutes, shall be deemed to be committing an act in violation of this Section.

53.05 (C)(2) Allowing or permitting an Animal to continually damage the property of anyone other than its Owner, including, but not limited to, turning over Garbage Containers or damaging gardens, flowers or other plant material.

53.05 (C)(3) Maintaining an Animal with a medical condition that could lead to a widespread epidemic that would ultimately be dangerous to the public health, unless the Animal is kept in a manner that minimizes the public health threat and is undergoing treatment for the disease in accordance with locally accepted veterinary standards.

53.05 (C)(4) Maintaining an Animal or Animals in an Environment of unsanitary conditions which results in offensive odors or is dangerous to the Animal or to public health, welfare or safety.

53.05 (D) ***Civil action or proceeding.*** In addition to the penalties provided in this Chapter for the violation of the provisions hereof, the City may institute any lawful civil action or proceeding to prevent, restrain or abate any acts of failures to act under this Chapter, which constitute a public nuisance.

§ 53.06 PRIMA FACIE EVIDENCE OF VIOLATION.

If any Animal shall be found in violation of the provisions of this Chapter, proof of the violation and identity of the Animal shall be prima facie evidence of the violation of this Chapter by the Owner of the Animal.

§ 53.07 DANGEROUS DOGS.

53.07 (A) ***Procedures.*** In the event that an incident involving any dog that may be dangerous as defined in this Code is reported, then the Broward County Division of Animal Care and Regulation shall proceed with the procedures and penalties for Dangerous Dogs contained in the Broward County Animal Care and Regulation Ordinance, Part II Code of Ordinances, Chapter 4 Animals and Fowl.

53.07 (B) ***Exceptions.*** Notwithstanding the definition of Dangerous Dog as provided in this Chapter, no dog may be classified dangerous if an injury or damage is sustained by a Person who, at the time said injury or damage was sustained, was committing a willful trespass or other tort upon Premises occupied by the Owner or keeper of the dog, or if lawfully on the property, was teasing, tormenting, abusing or assaulting the dog or its Owner or a family member, or was committing or attempting to commit a crime. No dog may be classified dangerous if the dog was protecting or defending a human being within the immediate vicinity of the dog from an unjustified attack or assault.

53.07 (C) ***Law Enforcement agency dogs.*** This Section shall not apply to dogs owned and used by a Law enforcement agency.

§ 53.08 ANIMAL BITES WITH INJURIES.

53.08 (A) ***Infliction of Severe Injuries.*** If any Animal inflicts Severe Injuries as defined in Chapter 1 or attacks and/or kills a domestic Animal as described in Chapter 1, definition of Dangerous Dog, the Animal's Owner or keeper shall be subject to the provisions of § 4 -14 of the Broward County Animal Care and Regulation Division, Part II Code of Ordinances, Chapter 4 Animals and Fowl. If the Animal Care and Regulation Division concludes following an Animal bite investigation that the Animal inflicted Severe Injuries while Unprovoked, the Owner or keeper shall, at all times that the Animal is not securely confined indoors or confined in an enclosure:

53.08 (A)(1) Muzzle the Animal in such a manner as to prevent it from biting or injuring any Person or other Animal; and

53.08 (A)(2) Keep the Animal on a leash with the Owner or keeper in attendance.

53.08 (B) ***Procedures.*** If any Animal inflicts Severe Injuries on a Person or attacks and/or kills a domestic Animal as described above, the Owner or keeper of the Animal and the Animal shall be subject to the procedures and penalties for Dangerous Dogs contained in the Broward County Animal Care and Regulation Ordinance, Part II Code of Ordinances, Chapter 4 Animals and Fowl.

53.08 (C) ***Penalties.*** Failure to comply with the requirements above shall constitute a violation of this Section. Any Person cited for an infraction for bites and/or unmuzzled Animals shall pay the civil penalty or penalties in the amount set by Broward County.

§ 53.09 WILD ANIMALS.

The keeping or confinement of Wild Animals shall be prohibited in all zoning districts, except the Agricultural/Estate District (AE), where Wild Animals may be kept provided that all applicable State Laws and regulations are met.

§ 53.10 ANIMAL DISPLAY PROHIBITED.

It is unlawful to display Animals for a commercial purpose on Public Property and private non-Residential Property, except within the interior of a retail establishment whose primary purpose is the sale of Animals.

TITLE VI: EMERGENCIES

CHAPTER 60. EMERGENCY MANAGEMENT.

§ 60.01 APPLICABILITY OF FLORIDA STATUTES.

The City adopts the procedures set forth in Florida Statutes, Chapters 252 and 870.

§ 60.02 EMERGENCY MANAGEMENT STRUCTURE.

60.02 (A) ***Director of Emergency Management.*** The City Manager shall act as the Director of Emergency Management.

60.02 (B) ***Implementation.*** The City Manager shall implement, manage and report on all actions authorized and taken under the provisions of this Chapter, as soon as reasonably practicable.

60.02 (C) ***Coordination of actions.*** The City Manager shall plan for the coordination of those actions necessary for the creation and maintenance of an effective Emergency response capability to prepare for and manage Emergency conditions.

60.02 (D) ***Absence or unavailability of Mayor.*** For purposes of this Chapter, the Alternate Presiding Officer shall act in the absence or unavailability of the Mayor; the Second Alternate Presiding Officer shall act in the absence or unavailability of the Mayor and the Alternate Presiding Officer; and the remaining Commissioner with the longest tenure (or if of equal tenure, the Commissioner whose last name is first alphabetically) shall act in the absence or unavailability of the Mayor, Alternate Presiding Officer and Second Alternate Presiding Officer.

§ 60.03 POWERS, DUTIES AND RESPONSIBILITIES.

60.03 (A) ***Powers, duties and responsibilities.*** The City Manager shall have the following powers, duties and responsibilities:

60.03 (A)(1) ***Emergency response plan.*** To direct the creation, revision and the exercise of Emergency response plans consistent with State and Broward County Emergency plans for the mitigation of, preparation for, response to, and recovery from Emergencies, and to exercise all powers permitted by Florida Statutes, Chapter 252.

60.03 (A)(2) ***Funding.*** To recommend funding to the City Commission for the creation and maintenance of an Emergency response capability as provided in this Chapter.

60.03 (A)(3) ***Emergency operations control center.*** To plan for and develop an Emergency operations control center to include equipment, staffing, and operational procedures necessary for the management and control of Emergency conditions.

60.03 (A)(4) ***Emergency awareness program.*** To develop and manage the City's Emergency awareness public information program.

60.03 (A)(5) ***Public assistance.*** To apply for public assistance or other Disaster relief funding.

60.03 (A)(6) ***Orders.*** To issue orders necessary for the protection of life and property, establishment of public order, and control of adverse conditions affecting public welfare resulting from an Emergency, and to adopt orders issued by Federal, State or Broward County Emergency management agencies.

60.03 (A)(7) ***Emergency expenditures.*** To utilize funds of the City as necessary to cope with the Emergency, including Emergency expenditures, as appropriated by the City Commission for Emergencies.

60.03 (A)(8) ***Emergency contracts.*** During a state of emergency or during a state of local emergency, to enter into contracts addressing situations arising out of the Emergency.

60.03 (B) ***Declaration of state of emergency.*** The City Manager and the Mayor jointly shall have the power, duty and responsibility to declare a state of local emergency pursuant to §60.04 and to declare a state of emergency pursuant to §60.05, and the City Manager shall inform the City Commission of the reasons for and status of events requiring the declaration.

60.03 (C) ***Curfew.***

60.03 (C)(1) ***Declaration of Curfew.*** The City Manager and the Mayor jointly shall have the power, duty and responsibility to establish or remove a Curfew for the duration, or any portion, of a state of local emergency pertaining to a Disaster or of a state of emergency pertaining to acts of violence. Should a Curfew remain in effect at the time of the first available City Commission meeting, the City Commission may take such actions as deemed necessary, with regard to such Curfew.

60.03 (C)(2) ***Exemptions from Curfew.*** A Curfew shall not apply to those providing essential Emergency services, including law enforcement, fire and medical services, water, Sewer, electric, gas and communications Emergency repairs and to other governmental Emergency management personnel and their designated Emergency response contractors and to the City's officials, employees, or essential contractors, and to any other Persons as designated by the City Manager.

§ 60.04 DECLARATION OF A STATE OF LOCAL EMERGENCY PERTAINING TO A DISASTER.

60.04 (A) ***Joint authority.*** The City Manager and the Mayor jointly shall have the authority to declare a state of local emergency, pursuant to Florida Statutes Chapter 252, regarding an Emergency Pertaining to a Disaster.

60.04 (B) ***Duration.*** The duration of a state of local emergency shall be limited to seven days for Emergencies Pertaining To Disasters, and may be extended as necessary in seven day increments, in accordance with Florida Statutes §252.38.

60.04 (C) ***Notice.*** Upon the declaration of a state of local emergency, the City Manager shall, if practicable, post a written notice of such declaration upon the bulletin board at City Hall, and shall, as promptly as practicable, file in the office of the City Clerk a notice of a declared state of local emergency, or Emergency measure declared or ordered and promulgated by virtue of Florida Statutes. The City Manager shall notify the local media and residents as soon as possible and in the manner most practicable and expeditious, utilizing the City's media resources available at the time.

60.04 (D) ***Meeting of the City Commission.*** Upon the declaration of a state of local emergency, the City Manager shall ensure that a meeting of the City Commission shall be called as soon as possible, in order to apprise the City Commission as to the status of the state of local emergency, and the City Commission may take such actions as deemed necessary.

§ 60.05 DECLARATION OF A STATE OF EMERGENCY PERTAINING TO ACTS OF VIOLENCE.

60.05 (A) ***Joint authority.*** The City Manager and the Mayor jointly shall have the authority to declare a state of emergency, pursuant to Florida Statutes Chapter 870, regarding an Emergency Pertaining To Acts of Violence.

60.05 (B) ***Duration.*** A state of emergency shall commence upon the declaration and shall terminate at the end of a period of 72 consecutive hours thereafter, unless prior to the end of the 72-hour period the City Manager and the Mayor jointly, or the City Commission, shall have terminated the state of emergency. Any extension of the 72-hour period shall be accomplished by request from the City Manager and the Mayor jointly and the concurrence of the City Commission by resolution, unless the nature of the Emergency renders a meeting of the City Commission impossible. If it is not possible for the City Commission to meet, the City Manager and the Mayor jointly shall have the authority to extend such 72-hour period.

60.05 (C) ***Notice.*** Upon the declaration of a state of emergency, the City Manager shall, if practicable, post a written notice of such declaration upon the bulletin board at City Hall and shall, as promptly as practicable, file in the office of the City Clerk a notice of a declared state of emergency, or Emergency measure declared or ordered and promulgated by virtue of Florida Statutes. The City Manager shall notify the local media and residents as soon as possible and in the manner most practicable and expeditious, utilizing the City's media resources available at the time.

60.05 (D) ***Meeting of the City Commission.*** Upon the declaration of a state of emergency, the City Manager shall ensure that a meeting of the City Commission shall be called as soon as possible, in order to apprise the City Commission as to the status of the state of emergency, and the City Commission may take such actions as deemed necessary.

CHAPTER 61. DISASTER ACCESS AND DEBRIS REMOVAL.

§ 61.01 PURPOSE.

The City needs an efficient and effective system for disposing of Disaster Debris. The Disaster Access and Debris Removal Ordinance is designed to advise property Owners of their duties and responsibilities with respect to Disaster Debris, to provide for an efficient system for collection and removal of Disaster Debris and to eliminate threats to health, safety and welfare created by Disaster Debris.

§ 61.02 FINDINGS OF FACT.

The City Commission finds that Disaster Debris can pose a serious and immediate threat to life, health, safety and welfare, and poses an immediate threat of significant damage to improved property.

§ 61.03 ACCESS FOR EMERGENCY RESPONSE AND DISASTER DEBRIS REMOVAL.

61.03 (A) ***Clearance of Disaster Debris by City.*** The City, through its contract agents, provides basic life safety services to the public. In order to facilitate Emergency response to Disasters that have caused Disaster Debris to be produced throughout the City, the City will clear Disaster Debris from Public and Private Rights-Of-Way throughout the City.

61.03 (B) ***Access.*** Upon declaration of a state of emergency affecting the City or the declaration of a state of local emergency by the City, and until the state of emergency and/or state of local emergency has been lifted or otherwise ceased, communities with Private Rights-Of-Way, whether gated or ungated, shall allow unlimited access through all community entrances to the City and its agents for response to emergencies and circumstances that pose serious and immediate threats to the life, health and/or safety of the public.

61.03 (C) ***Facilitation of access.*** To facilitate unlimited access throughout communities with Private Rights-Of-Way:

61.03 (C)(1) Community entrances with gatehouses that are staffed shall provide access to the City's agents and vehicles upon display of proper identification;

61.03 (C)(2) Community entrances with gatehouses that are staffed less than 24 hours a day shall keep gates open when the gatehouses are not staffed; and

61.03 (C)(3) Community entrances without staffed gatehouses shall keep gates open 24 hours a day.

§ 61.04 COLLECTION AND REMOVAL OF DISASTER DEBRIS, GENERALLY.

61.04 (A) ***Serious and immediate threat.*** The City will only remove Disaster Debris if the City Manager determines, pursuant to § 61.07**,** that the presence of Disaster Debris throughout

the City is so widespread or of such a severe nature as to pose a serious and immediate threat to life, health and/or safety.

61.04 (B) ***Removal only from Public and Private Rights-Of-Way.*** The City will only remove Disaster Debris piles from Public and Private Rights-Of-Way.

61.04 (C) ***Prioritization.*** The City will only remove Disaster Debris piles that have been collected and located as required by § 61.05. The City may prioritize the removal of different types or quantities of Disaster Debris.

61.04 (D) ***Compliance with laws and City Code.*** All actions of property Owners, or their agents, to collect, reduce, remove or otherwise dispose of Disaster Debris shall comply with all provisions of Federal and State law, and with the City Code.

61.04 (E) ***Removal of only Disaster Debris.*** Burning of Disaster Debris is prohibited at all times. The City will not remove Large Stumps or Limbs or any Debris that is not a direct result of the Disaster, including Debris generated by Land Clearing operations, house cleaning efforts or other attempts to have the City remove Debris that is not Disaster Debris.

§ 61.05 DISASTER DEBRIS FROM RESIDENTIAL PROPERTY.

61.05 (A) ***Responsibility.*** Residential Property Owners are responsible for the collection and removal of Disaster Debris from their property.

61.05 (B) ***Piling requirement.*** As provided in §61.04, the City may remove Disaster Debris collected from Residential Property. Residential Property Owners desiring the City to remove Disaster Debris shall collect and locate in piles all Disaster Debris as required by this Section before the City's Last Pass for removal of Disaster Debris. Disaster Debris piles put out for removal after the City makes its Last Pass will not be removed by the City.

61.05 (C) ***Segregation requirement.*** Residential Property Owners must segregate Structural Debris piles from Vegetative Debris piles, and these piles must be segregated from Household Waste. Household Waste shall be bagged and placed in Garbage cans. Structural Debris and Vegetative Debris shall not be bagged, except that Loose Vegetative Debris may be placed in large plastic bags.

61.05 (D) ***Placement of piles.*** Residential Property Owners shall place Disaster Debris piles:

61.05 (D)(1) In front of their residence in the Swale area immediately adjacent to the edge of the public or private Roadway; and

61.05 (D)(2) In such a manner as to allow ingress and egress to all Residential Properties.

61.05 (E) ***Combination of piles.*** Residential Property Owners may combine their several piles of segregated Disaster Debris into larger piles to accomplish this requirement.

61.05 (F) ***Damage to Sidewalks or mailboxes.*** The City and its agents shall not be responsible for damage to Sidewalks or mailboxes when Disaster Debris is placed on or adjacent thereto.

61.05 (G) ***City determination.*** If the City determines that:

61.05 (G)(1) A Residential Property Owner's Structural Debris, Vegetative Debris and/or Household Waste is commingled, or has not been collected in accordance with §61.05, the Residential Property Owner shall have 48 hours to properly segregate the Disaster Debris. If the Residential Property Owner fails to properly segregate his or her Disaster Debris within 48 hours, then the Residential Property Owner is required to remove and dispose of the Disaster Debris at his or her expense;

61.05 (G)(2) Any Disaster Debris from non-Residential Property, including community property, has been commingled with the Disaster Debris of a Residential Property Owner, then the City will not remove the Disaster Debris and the Residential Property Owner is required to remove the Disaster Debris piles at his or her expense; or

61.05 (G)(3) Any Disaster Debris has been moved or transported by a motorized machine, then the City will not remove the Disaster Debris and the Residential Property Owner is required to remove the Disaster Debris at his or her expense.

§ 61.06 DISASTER DEBRIS FROM NON-RESIDENTIAL PROPERTY.

61.06 (A) ***Commingling.*** The City will not remove Disaster Debris that has come from or been commingled with Disaster Debris from:

61.06 (A)(1) Non-Residential Property;

61.06 (A)(2) Landscaped Medians or Cul-De-Sacs in communities with Private Rights-Of-Way; or

61.06 (A)(3) Privately owned parks or other privately owned properties that are not residential.

61.06 (B) ***Disposal of all Disaster Debris.*** Non-Residential Property Owners, including entities owning community property, shall collect, reduce, remove and otherwise dispose of all Disaster Debris on their property within 60 days of the end of the disaster.

61.06 (C) ***Prohibition of commingling.*** Non-Residential Property Owners, including entities owning community property, shall not:

61.06 (C)(1) Move Disaster Debris from their property to Residential Property; or

61.06 (C)(2) Collect their Disaster Debris and commingle it with a Residential Property Owner's Disaster Debris piles.

61.06 (D) ***Tub grinding operations.*** Tub grinding operations or any other operation to reduce Disaster Debris from Non-Residential Property must be conducted at least 200 feet away from Residential Property.

§ 61.07 DETERMINATION OF IMMEDIATE THREAT TO LIFE, HEALTH OR SAFETY.

61.07 (A) ***Determination.*** The City Manager shall determine whether the presence of Disaster Debris is so widespread or of such a severe nature as to pose a serious and immediate threat to life, health and/or safety of the public as provided in this Section.

61.07 (B) ***Assessment.*** In the event that a disaster has caused or is causing the presence of Disaster Debris in the City, or any part thereof, the City Manager shall determine the scope of the disaster, the scope of the Disaster Debris spread, and the nature of the Disaster Debris. After compiling this information, the City Manager shall assess the seriousness and immediacy of threats to life, health and/or safety posed by Disaster Debris present throughout the City.

61.07 (C) ***Elimination of immediate threat.*** It is in the public interest to remove Disaster Debris where City action is necessary to eliminate an immediate threat to life and/or public health and/or public safety.

61.07 (D) ***Public interest.*** The City Manager shall determine, based upon his or her assessment of the seriousness and immediacy of threats to life, health and/or safety posed by Disaster Debris, whether it is in the public interest to remove Disaster Debris anywhere in the City.

61.07 (D)(1) The City Manager shall consider the presence and/or imminent development of any of the following dangers or aggravating factors in assessing whether the removal of Disaster Debris is in the public interest:

61.07 (D)(1)(a) Downed or disabled power lines or other Utility connections;

61.07 (D)(1)(b) Glass, metal or other sharp Debris;

61.07 (D)(1)(c) Biological or chemical waste and/or contaminants;

61.07 (D)(1)(d) Risk of fire;

61.07 (D)(1)(e) Risk of infestation by vermin;

61.07 (D)(1)(f) Risk of disease spread;

61.07 (D)(1)(g) Risk of preventing or impairing Emergency response;

61.07 (D)(1)(h) Risk of the collapse of Structures;

61.07 (D)(1)(i) Risk of Disaster Debris becoming wind-blown projectiles;

61.07 (D)(1)(j) Risk of attractive nuisance; and

61.07 (D)(1)(k) Impairment of drainage by Disaster Debris, and risks associated therewith.

61.07 (D)(2) The City Manager shall also consider any other danger or aggravating factor he or she finds applicable to assessing whether the removal of Disaster Debris is in the public interest.

61.07 (E) ***Promulgation of rules and forms.*** The City Manager shall promulgate any rules and forms necessary to detail determinations made pursuant to this Section.

§ 61.08 FEDERAL GOVERNMENT INDEMNIFICATION, DEFENSE AND HOLD HARMLESS.

To the extent that the City enters Private Rights-Of-Way to clear and/or remove Disaster Debris, the Owner of the Private Right-Of-Way shall indemnify, defend and hold the Federal government and its agencies harmless for claims arising from the City's removal of Disaster Debris.

CHAPTER 62. STORM SHUTTERS REGULATIONS.

§ 62.01 STORM SHUTTERS PLACED ON STRUCTURES CERTIFIED FOR OCCUPANCY.

Storm shutters are encouraged for all Structures certified for occupancy in the City. Permanently installed storm shutters shall be installed and designed in conformance with the standards set forth in the Building Code.

§ 62.02 STORM SHUTTERS – TIMES OF CLOSURE.

Consistent with the provisions regarding storm shutters as defined and set forth in the Building Code, it is prohibited to maintain storm shutters in a closed/secured position on a Structure except:

62.02 (A) ***Tropical Storm or Hurricane conditions forecasted.*** When the City falls within the National Hurricane Center's 5-day Track Forecast Cone for a tropical storm or hurricane and for a period of ten days after the City is no longer within any 5-day Track Forecast Cone; or

62.02 (B) ***Unoccupied Residential Dwelling Unit exception.*** On an unoccupied residential Dwelling Unit at any time during the period from June 1 through November 30 of each Year; or

62.02 (C) ***Testing and maintenance***. For up to 24 hours for testing and maintenance purposes; or

62.02 (D) ***Extension of time***. When the City Manager, in his or her discretion, issues an extension of time during which storm shutters may be maintained in a closed/secured position on the Structure.

§ 62.03 PERMISSIBLE STORM SHUTTERS.

Any type of storm shutters that meet the requirements for storm shutters set forth in the Building Code may be installed within the City, notwithstanding any rules or regulations of any Homeowner's, condominium or other maintenance Association.

CHAPTER 63. HURRICANE REGULATIONS.

§ 63.01 HURRICANE PREPARATIONS.

63.01 (A) ***The Building Code.*** In the event that a Hurricane Watch is issued by the appropriate governmental entity with the authority to issue a watch, the Owner, occupant or user of a Construction site or Premises certified for occupancy shall comply with the requirements of the Building Code in addition to the requirements specified herein, by taking all steps necessary to Secure the Construction site or Premises, including removal or securing of potentially hazardous or loose objects.

63.01 (B) ***Special hurricane inspections.***

63.01 (B)(1) In the event that a Hurricane Watch is issued by the the appropriate governmental entity, all materials in exposed areas outside of Structures certified for occupancy by the City shall be removed from the exterior of the Premises, unless such materials have been permanently affixed to the ground or the Structure. Orders to comply shall be written and given to a Person on the Premises most logically responsible for maintenance thereof, or if no Person is present, orders may be given by facsimile to the responsible entity if such entity is known.

63.01 (B)(2) Any Person receiving an order from the City's Building Official or City's Code Enforcement Officer to comply with this Section shall comply with said order within the time specified on that order, but no later than 12 hours before the anticipated arrival of hurricane force winds (winds of 74 miles per hour or greater).

63.01 (B)(3) In situations where a Person fails to Secure a site or Premises consistent with this Section and pursuant to the orders of the City's Building Official or City's Code Enforcement Officer, the City may enter and Secure the site or Premises for purposes of correcting the violation. The authority to enter and Secure a site or Premises for such purposes shall extend to any agency, company or firm retained by the City to effect compliance. In either situation, the Person responsible for the violation shall reimburse the City for its costs of cleaning up, clearing and Securing the site or Premises, including all costs associated with retaining an agency, company or firm to effect such compliance. This shall also include reimbursement for costs related to demolition or other measures deemed necessary to correct hazardous structural conditions.

63.01 (C) ***Construction Waste and Construction materials.***

63.01 (C)(1) It shall be the joint responsibility of any Owner of real property upon which Construction is occurring, or any contractor responsible for said Construction, to ensure that all road Rights-Of-Way and properties in the area remain free at all times of all Construction Waste and Trash resulting from such Construction.

63.01 (C)(2) During Severe Weather, it shall be a violation of this Section for an Owner of real property upon which Construction is occurring or any contractor responsible for said Construction, to have on or near that property loose Construction Debris. Any loose

Construction Debris shall be Secured and contained. The Construction site must be cleared of loose Construction Debris pursuant to this Section.

63.01 (C)(3) During Severe Weather, it shall be a violation of this Section for an Owner of the real property upon which Construction is occurring, or any contractor responsible for said Construction, to have on that property Loose Construction Material, including Roof tiles, that are not fastened or Secured to the ground or to a permanent Structure.

63.01 (C)(4) Media broadcasts or notices issued by the appropriate governmental entity of Severe Weather are deemed sufficient notice to the Owner of real property upon which Construction is occurring, or any contractor responsible for said Construction, to Secure Loose Construction Debris and Loose Construction Materials against the effects of hurricane force winds.

63.01 (C)(5) Materials stockpiled on top of any Structure under Construction shall be permanently installed by the property Owner or contractor upon a warning of Severe Weather; provided, however, in the event such installation cannot be timely completed, then the property Owner or contractor shall:

63.01 (C)(5)(a) Band together the Construction materials and fasten them to the top of the Structure in such a manner so as not to present a threat of their becoming airborne during Severe Weather; or

63.01 (C)(5)(b) Remove the Construction materials from the top of the Structure and fasten down to the ground; or

63.01 (C)(5)(c) Remove the Construction materials from the job site; or

63.01 (C)(5)(d) Store the Construction materials inside an enclosed Structure.

63.01 (C)(6) Roll-off Containers and Construction and Demolition Debris Containers shall be emptied and Secured, or removed from the site.

63.01 (C)(7) The City's Building Official or City's Code Enforcement Officer shall issue a citation for each violation of this Section. Prior to the issuance of any citation for a violation of this Section, the City's Building Official or City's Code Enforcement Officer shall attempt to provide a written notice to the Owner of the real property upon which Construction is occurring or any contractor responsible for said Construction. That notice shall specifically set a time period (reasonably calculated by the City's Building Official or City's Code Enforcement Officer) for correction of the violation. In the event the City takes Emergency actions to Secure a property considered in violation of this Section, the property Owner shall be responsible for all costs associated therewith and shall be billed for all charges and expenses incurred by the City.

CHAPTER 64. FLOOD DAMAGE PREVENTION.

§ 64.01 STATUTORY AUTHORIZATION.

The Legislature of the State of Florida has in Florida Statutes delegated the responsibility to local governmental units to adopt regulations designed to promote the public health, safety, and general welfare of its citizenry. Therefore, the City Commission of the City of Weston, Broward County, Florida does ordain as follows.

§ 64.02 FINDINGS OF FACT.

64.02 (A) The Flood hazard areas of the City are subject to periodic inundation that results in loss of life and property, health and safety hazards, disruption of commerce and governmental services, extraordinary public expenditures for Flood protection and relief, and impairment of the tax base, all of which adversely affect the public health, safety, and general welfare.

64.02 (B) These Flood losses are caused by the occupancy in Flood hazard areas of Uses vulnerable to Floods that are inadequately elevated, floodproofed, or otherwise unprotected from Flood damages, and by the cumulative effect of obstructions in Floodplains causing increases in Flood heights and velocities.

§ 64.03 APPLICABILITY OF PROVISIONS.

This Chapter shall apply to all areas of special Flood hazard within the jurisdiction of the City.

§ 64.04 PURPOSE.

It is the purpose of this Chapter promote the public health, safety, and general welfare and to minimize public and private losses due to Flood conditions in specific areas by provisions designed to:

64.04 (A) Require that Uses vulnerable to Floods, including facilities which serve such Uses, be protected against Flood damage at the time of initial Construction.

64.04 (B) Restrict or prohibit Uses that are dangerous to health, safety, and property due to water or erosion hazards, or that result in damaging increases in Flood heights, velocities, or erosion.

64.04 (C) Control the alteration of natural Floodplains, stream channels, and natural protective barriers that are involved in the accommodation of Flood waters.

64.04 (D) Control filling, grading, dredging, and other Development that may increase Flood damage or erosion.

64.04 (E) Prevent or regulate the Construction of Flood barriers that will unnaturally divert Flood waters or that may increase Flood hazards to other lands.

§ 64.05 OBJECTIVES.

The objectives of this Chapter are:

64.05 (A) To protect human life and health.

64.05 (B) To minimize expenditure of public money for costly Flood control projects.

64.05 (C) To minimize the need for rescue and relief efforts associated with Flooding and generally undertaken at the expense of the general public.

64.05 (D) To minimize prolonged business interruptions.

64.05 (E) To minimize damage to public facilities and utilities such as water and gas mains, electric, telephone, and Sewer lines, Streets, and bridges located in Floodplains.

64.05 (F) To help maintain a stable tax base by providing for the sound use and Development of Flood prone areas in such a manner as to minimize Flood blight areas.

64.05 (G) To insure that potential home buyers are notified that property is in a Flood area.

§ 64.06 DEFINITIONS.

The following definitions apply to the Code provisions of this Chapter 64 only:

ADDITION TO AN EXISTING BUILDING. Any walled and roofed expansion to the perimeter of a Building in which the addition is connected by a common load-bearing wall other than a fire wall. Any walled and roofed addition which is connected by a fire wall or is separated by independent perimeter load-bearing walls is "New Construction."

APPEAL. A request for a review of the City Manager's (or designee's) interpretation of any provision of this Chapter or a request for a Variance.

AREA OF SHALLOW FLOODING. A designated AO Zone on a community's Flood Insurance Rate Map (FIRM) with Base Flood depths from one to three feet, where a clearly defined channel does not exist, where the path of Flooding is unpredictable and indeterminate, and where velocity flow may be evident.

AREA OF SPECIAL FLOOD HAZARD. The land in the Floodplain within a community subject to a 1% or greater chance of Flooding in any given Year.

BASE FLOOD. The Flood having a 1% chance of being equaled or exceeded in any given Year.

BASE FLOOD ELEVATION. The height of the Base Flood, usually in feet, in relation to the National Geodetic Vertical Datum of 1929, the North American Vertical Datum of 1988, or other

datum referenced in the Flood Insurance Study report, or depth of the Base Flood, usually in feet, above the ground surface.

BASEMENT. Any room or rooms in a Structure having four feet or more of the room height below grade, except, in connection with Chapter 64 of the Code, Basement shall mean that portion of a Building having its floor subgrade (below ground level) on all sides.

BUILDING. Any Structure built for support, shelter, or enclosure for any occupancy or storage.

BUILDING, ELEVATED. A non-Basement Building built to have the Lowest Floor elevated above the ground level by means of fill, solid foundation perimeter walls, pilings, columns (posts and piers), or shear walls.

DEVELOPMENT. Shall mean any man-made change to improved or unimproved real estate, including but not limited to Buildings or other Structures, mining, dredging, filling, grading, paving, excavating, drilling operations, or storage of materials or equipment.

EXISTING CONSTRUCTION. Any Structure for which the "Start Of Construction" commenced before October 2, 1997.

EXISTING MANUFACTURED HOME PARK OR SUBDIVISION. A Manufactured Home park or subdivision for which the Construction of facilities for servicing the Lots on which the Manufactured Homes are to be affixed (including at a minimum the installation of utilities, the Construction of Streets, and either final site grading or the pouring of concrete pads) is completed before October 2, 1997.

EXPANSION TO AN EXISTING MANUFACTURED HOME OR SUBDIVISION. The preparation of additional sites by the Construction of facilities for servicing the Lots on which the Manufactured Homes are to be affixed (including the installation of utilities, the Construction of Streets, and either final site grading or the pouring of concrete pads).

FLOOD or ***FLOODING.*** A general and temporary condition of partial or complete inundation of normally dry land areas from:

(1) The overflow of inland or tidal waters; or

(2) The unusual and rapid accumulation or runoff of surface waters from any source.

FLOOD HAZARD BOUNDARY MAP (FHBM). An official map of a community issued by the Federal Emergency Management Agency where the boundaries of the areas of special flood hazard have been defined as Zone A.

FLOOD INSURANCE RATE MAP (FIRM). An official map of a community on which the Federal Emergency Management Agency has delineated the areas of special Flood hazard and/or risk premium zones applicable to the community.

FLOOD INSURANCE STUDY. The official report provided by the Federal Emergency Management Agency containing Flood profiles, Flood Boundary Floodway Map, and the water surface elevation of the Base Flood.

FLOODPLAIN. Any land area susceptible to Flooding.

FLOODPROOFING. Any combination of structural and non-structural additions, changes, or adjustments to Structures, which reduce or eliminate Flood damage to real estate or improved real property, water and sanitary facilities, Structures and their contents.

FLOODWAY. The channel of a river or other watercourse and the adjacent land areas that must be reserved in order to discharge the Base Flood without cumulatively increasing the water surface elevation more than a designated height.

FUNCTIONALLY DEPENDENT FACILITY. A facility which cannot be used for its intended purpose unless it is located in close proximity to water, such as a docking or port facility necessary for cargo loading, shipbuilding, or ship repair. The term does not include storage, manufacture, sales, or service facilities.

HIGHEST ADJACENT GRADE. The highest natural elevation of the ground surface, prior to Construction, next to the proposed foundation walls of a Building.

HISTORIC STRUCTURE. Any Structure that is:

(1) Listed individually in the National Register of Historic Places (a listing maintained by the Department of Interior) or preliminarily determined by the Secretary of the Interior as meeting the requirements for individual listing on the National Register;

(2) Certified or preliminarily determined by the Secretary of the Interior as contributing to the historical significance of a registered historic or a district preliminarily determined by the Secretary to qualify as a registered historic district;

(3) Individually listed on the Florida inventory of historic places, which has been approved by the Secretary of the Interior; or

(4) Individually listed on a local inventory of historic places in communities with historic preservation programs that have been certified either:

(a) By the approved Florida program as determined by the Secretary of Interior, or

(b) Directly by the Secretary of the Interior.

LOWEST FLOOR. The Lowest Floor of the lowest enclosed area (including Basement). An unfinished or Flood resistant enclosure, used solely for parking of vehicles, Building access, or storage, in an area other than a Basement, is not considered a Building's Lowest Floor, provided

that such enclosure is not built so as to render the Structure in violation of the provisions of this Code.

MANUFACTURED HOME. A Building, transportable in one or more sections, which is built on a permanent chassis and designed to be used with or without a permanent foundation when connected to the required utilities. The term also includes park trailers, travel trailers, and similar transportable Structures placed on a site for 180 consecutive days or longer and intended to be improved property.

MEAN SEA LEVEL. The average height of the sea for all stages of the tide. It is used as a reference for establishing various elevations within the Floodplain. The term is synonymous with National Geodetic Vertical Datum (NGVD).

NATIONAL GEODETIC VERTICAL DATUM (NGVD). As corrected in 1929, is a vertical control used as a reference for establishing varying elevations within the Floodplain.

NEW CONSTRUCTION. Any Structure for which the "Start Of Construction" commenced after October 2, 1997. The term also includes any subsequent improvements to such Structure.

NEW MANUFACTURED HOME PARK OR SUBDIVISION. A Manufactured Homes park or subdivision for which the Construction of facilities for servicing the Lots on which the Manufactured Homes are to be affixed (including at a minimum, the installation of utilities, the Construction of streets, and either final site grading or the pouring of concrete pads) is completed on or after October 2, 1997

START OF CONSTRUCTION. For other than New Construction or Substantial Improvements under the Coastal Barrier Resources Act (P.L. 97-348) (16 USC 3501 et seq.), includes Substantial Improvement, and means the date the Building Permit was issued, provided the actual Start Of Construction, repair, reconstruction, or improvement was within 180 days of the permit date. The "actual start" means the first placement of permanent Construction of a Building such as the pouring of slabs or footings, installation of piles, Construction of columns, or any work beyond the stage of Excavation, and includes the placement of a Manufactured Home on a foundation. Permanent Construction does not include land preparation, such as clearing, grading, and filling; nor does it include the installation of Streets and/or walkways; nor does it include Excavation for a Basement, footings, piers, or foundations or the erection of temporary forms; nor does it include the installation on the property of accessory Buildings, such as garages or sheds not occupied as Dwelling Units or not part of the main Building. For a Substantial Improvement, the "actual Start Of Construction" means the first alteration of any wall, ceiling, floor, or other structural part of a Building, whether or not that alteration affects the external dimensions of the Building.

STRUCTURE, HISTORIC. Any Structure that is one of the following:

(1) Listed individually in the National Register of Historic Places (a listing maintained by the U.S. Department of Interior) or preliminarily determined by the Secretary of the Interior as meeting the requirements for individual listing on the National Register.

(2) Certified or preliminarily determined by the Secretary of the Interior as contributing to the historical significance of a registered historic district or a district preliminarily determined by the Secretary to qualify as a registered historic district;

(3) Individually listed on a state inventory of historic places in states with historic preservation programs which have been approved by the Secretary of the Interior.

(4) Individually listed on a local inventory of historic places in communities with historic preservation programs that have been certified either:

(a) By an approved state program as determined by the Secretary of the Interior; or

(b) Directly by the Secretary of the Interior in states without approved programs.

SUBSTANTIAL DAMAGE. Damage of any origin sustained by a Structure whereby the cost of restoring the Structure to its before-damaged condition would equal or exceed 50% of the market value of the Structure before the damage occurred.

SUBSTANTIAL IMPROVEMENT. Any combination of repairs, reconstruction, alteration, or improvements to a Building taking place during the life of a Building in which the cumulative cost equals or exceeds 50% of the market value of the Structure prior to the improvement. The market value of the Building should be the appraised value of the Structure prior to the start of the initial repair or improvement, or, in the case of damage, the value of the Structure prior to the damage occurring. This term includes Structures which have incurred "Substantial Damage," regardless of the actual repair work performed. For the purposes of this definition, Substantial Improvement is considered to occur when the first alteration of any wall, ceiling, floor, or other structural part of the Building commences, whether or not that alteration affects the external dimensions of the Building. The term does not, however, include any project for improvement of a Building required to comply with existing health, sanitary, or safety code specifications which are solely necessary to assure safe living conditions and which have been pre-identified by the Code Enforcement Official and not triggered by the improvement. affects the external dimensions of the Structure.

SUBSTANTIALLY IMPROVED EXISTING MANUFACTURED HOME PARKS OR SUB-DIVISIONS. Manufactured Home parks or subdivisions where the repair, reconstruction, rehabilitation, or improvement of the streets, utilities, and pads equals or exceeds 50% of the value of the streets, utilities, and pads before the repair, reconstruction, or improvement commenced.

VARIANCE. A grant of relief from the requirements of this Code which permits Construction otherwise prohibited by this Code.

(1) Built on a single chassis.

(2) 400 square feet or less when measured at the largest horizontal projection.

(3) Designed to be self-propelled or permanently towable by a light duty truck.

(4) Designed primarily not for use as a permanent Dwelling but as temporary living quarters for recreational, camping, travel, or seasonal use.

§ 64.07 BASIS FOR AREA OF SPECIAL FLOOD HAZARD.

The areas of special Flood hazard identified by the Federal Emergency Management Agency in its latest Flood Insurance Study of Broward County, Florida, with accompanying maps and other supporting data, and any revision thereto, are adopted by this Chapter.

§ 64.08 BUILDING PERMIT REQUIRED.

A Building Permit shall be required in conformance with the provision of this Chapter prior to the commencement of any Development activities.

§ 64.09 COMPLIANCE REQUIRED.

No Structure or land shall hereafter be located, extended, converted, or structurally altered without full compliance with the terms of this Chapter and other applicable regulations.

§ 64.10 ABROGATION AND GREATER RESTRICTIONS.

This Chapter is not intended to repeal, abrogate, or impair any existing easements, covenants, or deed restrictions. However, where this Chapter and another ordinance or Code provision conflict or overlap, whichever imposes the more stringent restrictions shall prevail.

§ 64.11 INTERPRETATION.

In the interpretation and application of this Chapter all provisions shall be:

64.11 (A) Considered as minimum requirements.

64.11 (B) Liberally construed in favor of the governing body.

64.11 (C) Deemed neither to limit nor repeal any other powers granted under State statutes.

§ 64.12 WARNING AND DISCLAIMER OF LIABILITY.

The degree of Flood protection required by this Chapter is considered reasonable for regulatory purposes and is based on scientific and engineering considerations. Larger Floods can and will occur on rare occasions. Flood heights may be increased by manmade or natural causes. This Chapter does not imply that land outside the areas of special Flood hazard or uses permitted within such areas will be free from Flooding or Flood damages. This Chapter shall not create liability on the part of the City, the Mayor, or City Commission, or any Officer or employee thereof for any Flood damages that result from reliance on this Chapter or any administrative decision lawfully made thereunder.

PERMITS AND ADMINISTRATION

§ 64.25 ADMINISTRATOR.

64.25 (A) The City Manager is hereby appointed to administer and implement the provisions of this Chapter.

64.25 (B) Duties of the Administrator shall include, but shall not be limited to:

64.25 (B)(1) Reviewing all Development permits to assure that the permit requirements of this Chapter have been satisfied.

64.25 (B)(2) Requiring verification of the actual elevation, in relation to Mean Sea Level, of the Lowest Floor (including Basement) of all new or substantially improved Structures, in accordance with § 64.36(A), which verification shall be submitted by the permit holder; the verification shall be prepared by an Engineer or land surveyor registered in the State of Florida.

64.25 (B)(3) Requiring verification of the actual elevation, in relation to Mean Sea Level, to which the new or substantially improved Structures have been Floodproofed, in accordance with §64.26(B), which verification shall be submitted by the permit holder; the verification shall be prepared by an Engineer or land surveyor registered in the State of Florida.

64.25 (B)(4) When Flood-proofing is utilized for a Structure, requiring the permit holder to obtain certification from a professional Engineer or architect, registered in the State of Florida, in accordance with §64.36(B)and §64.38(B).

64.25 (B)(5) When Base Flood Elevation data or Floodway data have not been provided in accordance with §64.07, obtaining, reviewing, and reasonably utilizing any Base Flood Elevation and Floodway data available from a Federal, State, or other source in order to administer the provisions of §64.35 et seq.

64.25 (B)(6) Notifying adjacent communities and the State Department of Community Affairs prior to any alteration or relocation of a watercourse, and submitting evidence of such notification to the Federal Emergency Management Agency.

64.25 (B)(7) Assuring that maintenance is provided within the altered or relocated portion of said watercourse so that the floodcarrying capacity is not diminished.

64.25 (B)(8) Where interpretation is needed as to the exact location of boundaries of the areas of special Flood hazard (for example, where there appears to be a conflict between a mapped boundary and actual field conditions), consulting the Chief Building Official (Director of Building and Permitting) who shall make the necessary interpretation. Any Person contesting the location of the boundary shall be given a reasonable opportunity to Appeal the interpretation as provided in this Section.

64.25 (B)(9) Advising permittees that additional Federal or State permits may be required, and if specific Federal or State permit requirements are known, requiring that copies of such permits be provided and maintained on file.

64.25 (B)(10) Maintaining all records pertaining to the provisions of this Chapter in the office of the City Manager and open for public inspection.

§ 64.26 PERMIT PROCEDURES.

Application for a Development permit shall be made to the City Manager on forms furnished by the City prior to any Development activities, and may include, but not be limited to, the following: plans in duplicate drawn to scale showing the nature, location, dimensions, and elevations of the area in question; existing or proposed Structures, earthen fill, storage of materials or equipment, drainage facilities, and the location of the foregoing. Specifically, the following information is required:

64.26 (A) Application stage.

64.26 (A)(1) Elevation in relation to Mean Sea Level of the proposed Lowest Floor (including Basement) of all Structures and the highest adjacent road crown.

64.26 (A)(2) Elevation in relation to Mean Sea Level to which any non-residential Structure will be Floodproofed.

64.26 (A)(3) A certificate from a registered professional Engineer or architect that any non-residential Floodproofed Structure will meet the Flood-proofing criteria in §64.36(B)and §64.38(B).

64.26 (A)(4) A description of the extent to which any watercourse will be altered or relocated as a result of a proposed Development.

64.26 (B) Construction stage. A regulatory floor elevation or flood-proofing certification after the Lowest Floor is completed. Upon placement of the Lowest Floor, or for non-residential Structures, after Floodproofing, whichever is applicable, it shall be the duty of the permit holder to submit to the Chief Building Official (Director of Building and Permitting) a certification of the elevation of the Lowest Floor, or Floodproofed elevation, whichever is applicable, as built, in relation to Mean Sea Level. Said certification shall be prepared by or under the direct supervision of a registered land surveyor or professional Engineer and certified by same. When Floodproofing is utilized for a non-residential Structure, said certification shall be prepared by or under the direct supervision of a professional Engineer or architect registered in the State of Florida and certified by same. Any work undertaken prior to submission of the certification shall be at the permit holder's risk. The Chief Building Official shall review the above-referenced elevation survey data submitted. Deficiencies detected by such review shall be corrected by the permit holder immediately and prior to further progressive work being permitted to proceed. Failure to submit the survey or failure to make said corrections required hereby shall be cause to issue a stop-work order for the project.

PROVISIONS FOR FLOOD HAZARD REDUCTION

§ 64.35 GENERAL STANDARDS.

In all areas of special Flood hazard the following provisions are required:

64.35 (A) New Construction and Substantial Improvements of Existing Structures shall be anchored to prevent flotation, collapse, or lateral movement of the Structure.

64.35 (B) New Construction and Substantial Improvements of Existing Structures shall be constructed with materials and Utility equipment resistant to Flood damage.

64.35 (C) New Construction or Substantial Improvements of Existing Structures shall be constructed by methods and practices that minimize Flood damage.

64.35 (D) All heating and air conditioning equipment, electrical, ventilation, Plumbing, and other service facilities shall be designed and/or located so as to prevent water from entering or accumulating within the components during conditions of Flooding.

64.35 (E) Manufactured Homes shall be anchored to prevent flotation, collapse, or lateral movement. Methods of anchoring may include, but are not limited to, use of over-the-top or frame ties to ground anchors. This standard shall be in addition to and consistent with applicable State requirements for resisting wind forces.

64.35 (F) New and replacement water supply systems shall be designed to minimize or eliminate infiltration of Flood waters into the system.

64.35 (G) New and replacement Sanitary Sewage systems shall be designed to minimize or eliminate infiltration of Flood waters into the systems and discharges from the systems into Flood waters.

64.35 (H) On-site waste disposal systems shall be located and constructed to avoid impairment to them or contamination from them during Flooding.

64.35 (I) Any alteration, repair, reconstruction, or improvement to a Structure which is not compliant with the provisions of this Chapter shall be undertaken only if the nonconformity is not furthered, extended, or replaced.

64.35 (J) Any alteration, repair, reconstruction, or improvements to a Structure which is in compliance with the provisions of this Chapter shall meet the requirements of "New Construction" as contained in this Chapter.

§ 64.36 SPECIFIC STANDARDS.

In all areas of special Flood hazard where Base Flood Elevation data have been provided, as set forth in §64.07 or §64.25, the following provisions are required:

64.36 (A) *Residential Construction*. New Construction or Substantial Improvement of any residential Structure (or Manufactured Home) shall have the Lowest Floor, including Basement, elevated to no lower than one foot above the Base Flood Elevation. Should solid foundation perimeter walls be used to elevate a Structure, openings sufficient to facilitate automatic equalization of hydrostatic Flood forces on exterior walls by allowing for the entry and exit of Flood waters shall be provided in accordance with standards of § 64.36(C).

64.36 (B) *Non-residential Construction*. New Construction or Substantial Improvement of any commercial, industrial, or non-residential Structure (or Manufactured Home) shall have the Lowest Floor, including Basement, elevated to no lower than one foot above the Base Flood Elevation. Structures located in A-zones may be Floodproofed in lieu of elevation provided that all areas of the Structure below the Base Flood Elevation, together with attendant Utility and sanitary facilities, are designed to be watertight, with walls substantially impermeable to the passage of water, and structural components having the capability of resisting hydrostatic and hydrodynamic loads and the effects of buoyancy. A professional Engineer or architect registered in the State of Florida shall certify that the standards of this Section are satisfied.

64.36 (C) *Elevated Buildings*. New Construction or Substantial Improvemens of existing elevated Structures that include any fully enclosed area located below the Lowest Floor elevation and formed by foundation and other exterior walls shall be designed to preclude finished living space and designed to allow for the entry and exit of floodwaters to automatically equalize hydrostatic Flood forces on exterior walls.

64.36 (C)(1) Designs for complying with this requirement must either be certified by a professional Engineer or architect registered with the State of Florida or meet the following minimum criteria:

64.36 (C)(1)(a) The design must provide a minimum of two openings having a total net area of not less than one square inch for every square foot of enclosed area subject to Flooding.

64.36 (C)(1)(b) The bottom of all openings shall be no higher than one foot above grade.

64.36 (C)(1)(c) Openings may be equipped with screens, louvers, valves, or other coverings or devices provided they permit the automatic flow of floodwaters in both directions.

64.36 (C)(2) Electrical, Plumbing, and other Utility fixtures are prohibited below the Base Flood Elevation.

64.36 (C)(3) Access to the enclosed area shall be the minimum necessary to allow for only parking of vehicles (garage door), limited storage of maintenance equipment used in connection with the Premises (standard exterior door), or entry to the living area (stairway or elevator).

64.36 (C)(4) The interior portion of such enclosed area shall not be temperature-controlled, partitioned or finished into separate rooms.

64.36 (D) *Standards for Manufactured Homes and recreational vehicles.*

64.36 (D)(1) All Manufactured Homes placed, or substantially improved, on individual Lots or parcels, in expansions to Existing Manufactured Home Parks Or Subdivisions, or in new or Substantially Improved Manufactured Home Parks Or Subdivisions, must have the Lowest Floor, including Basement, elevated no lower than 1.5 feet above the Base Flood Elevation.

64.36 (D) (2) All Manufactured Homes placed or substantially improved in an Existing Manufactured Home Park Or Subdivision must be elevated so that:

64.36 (D)(2)(a) The Lowest Floor of the Manufactured Home is elevated no lower than the level of the Base Flood Elevation.

64.36 (D)(2) (b) The Manufactured Home chassis is supported by reinforced piers or other foundation elements of at least an equivalent strength, and no less than 36 inches in Height above grade.

64.36 (D)(2) (c) The Manufactured Home must be securely anchored to the adequately anchored foundation system to resist flotation, collapse, and lateral movement.

64.36 (D)(2)(d) On a site in an Existing Manufactured Home Park Or Subdivision on which a Manufactured Home has incurred "Substantial Damage" as the result of a Flood, any Manufactured Home placed or substantially improved on that site must meet the standards of subsections (A) and (C) above.

64.36 (D)(3) All recreational vehicles placed on sites must either:

64.36 (D)(3)(a) Be fully licensed and ready for Highway Use, and be on the site for fewer than 180 consecutive days;

64.36 (D)(3)(b) Meet all the requirements for "New Construction," including anchoring and elevation requirements of subsections (D)(1) and (D)(2)(c) above; or

64.36 (D)(3)(c)Be licensed and ready for Highway Use, be attached to the site only by quick disconnect type utilities and security devices, and have no permanently attached additions.

64.36 (E) *Floodways*. Located within areas of special Flood hazard established in §64.07 are areas designated as Floodways. A Floodway may be an extremely hazardous area due to velocity of Flood waters, Debris, or erosion potential. In addition, the area must remain free of encroachment in order to discharge the Base Flood without increased Flood heights. Therefore, the following provisions shall apply:

64.36 (E)(1) Encroachments, including earthen fill, New Construction, Substantial Improvements, or other Development, are prohibited within the regulatory Floodway. Development may be permitted provided certification, with supporting technical data, is

provided by a registered professional Engineer demonstrating that the encroachment shall not result in any increase in Flood levels during occurrence of the Base Flood discharge.

64.36 (E)(2) Only if subsection (1) is satisfied, then all New Construction and Substantial Improvements shall comply with all other applicable Flood hazard reduction provisions of §64.35 et seq.

64.36 (E)(3) The placement of Manufactured Homes (Mobile Homes), except in an Existing Manufactured Home Park Or Subdivision, is prohibited. A replacement Manufactured Home may be placed on a Lot in an Existing Manufactured Home Park Or Subdivision provided the anchoring standards of §64.35(B) the elevation standards of § 64.36(A), and the encroachment standards of § 64.36(E)(1) are met.

§ 64.37 STANDARDS FOR STREAMS.

Located within the areas of special Flood hazard established in §64.07, where streams exist but where no Base Flood data has been provided or where Base Flood data has been provided without Floodways, the following provisions apply:

64.37 (A) When Base Flood Elevation data or Floodway data have not been provided in accordance with §64.07, then the City Manager shall obtain, review, and reasonably utilize any Base Flood Elevation and Floodway data available from a federal, state, or other source, in order to administer the provisions of §64.35 et seq. If data are not available from outside sources, then the following provisions ((B) and (C)) shall apply.

64.37 (B) No encroachments, including fill material or Structures, shall be located within a distance of the stream bank equal to two times the width of the stream at the top of the bank or 20 feet each side from the top of the bank, whichever is greater, unless certification by a registered professional Engineer is provided demonstrating that such encroachment shall not result in any increase in Flood levels during the occurrence of the Base Flood discharge.

64.37 (C) In special Flood hazard areas without Base Flood Elevation data, New Construction and Substantial Improvements of existing Structures shall have the Lowest Floor of the lowest enclosed area (including Basement), elevated no less than three feet above the Highest Adjacent Grade at the Building site.

§ 64.38 STANDARDS FOR AREAS OF SHALLOW FLOODING (AO ZONES).

Located within the areas of special Flood hazard established in §64.07 are areas designated as shallow Flooding areas. These areas have Flood hazards associated with Base Flood depths of one to three feet, where a clearly defined channel does not exist and where the path of Flooding is unpredictable and indeterminate; therefore, the following provisions apply:

64.38 (A) All New Construction and Substantial Improvements of residential Structures shall have the Lowest Floor, including Basement, elevated to the Flood depth number specified on the Flood Insurance Rate Map, above the Highest Adjacent Grade. If no Flood depth number is specified, the Lowest Floor, including Basement, shall be elevated at least two feet above the Highest Adjacent Grade.

64.38 (B) All New Construction and Substantial Improvements of non-residential Structures shall:

64.38 (B)(1) Have the Lowest Floor, including Basement, elevated to the Flood depth number specified on the Flood Insurance Rate Map above the Highest Adjacent Grade. If no Flood depth number is specified, the Lowest Floor, including Basement, shall be elevated at least two feet above the Highest Adjacent Grade; or

64.38 (B)(2) Together with attendant Utility and sanitary facilities be completely floodproofed to the specified Flood level so that any space below that level is watertight with walls substantially impermeable to the passage of water and with structural components having the capability of resisting hydrostatic and hydrodynamic loads and effects of buoyancy. Certification is required as stated in §64.36(B).

§ 64.39 STANDARDS FOR SUBDIVISION PROPOSALS.

64.39 (A) All subdivision proposals shall be consistent with the need to minimize Flood damage.

64.39 (B) All subdivision proposals shall have public utilities and facilities such as Sewer, gas, electrical, and water systems located and constructed to minimize Flood damage.

64.39 (C) All subdivision proposals shall have adequate drainage provided to reduce exposure to Flood hazards.

64.39 (D) Base Flood Elevation data shall be provided for subdivision proposals and other proposed Development, including Manufactured Home parks and subdivisions, greater than 50 Lots or five acres, whichever is less.

§ 64.99 PENALTY.

Violation of the provisions of this Chapter or failure to comply with any of its requirements shall constitute a misdemeanor. Any Person who violates this Chapter or fails to comply with any of its requirements shall, upon conviction thereof, be punished as provided in § 2.99. Nothing herein contained shall prevent the City from taking such other lawful actions as is necessary to prevent or remedy any violation.

TITLE VII: MOTOR VEHICLES AND VESSELS

CHAPTER 70. SERVICING AND STORAGE.

§ 70.01 SERVICING, STORAGE, AND SALES OF MOTOR VEHICLES AND VESSELS.

70.01 (A) ***Free flow of Traffic.*** No Person shall interfere with the free flow of vehicular or pedestrian Traffic in normal courses on Public Right-Of-Ways.

70.01 (B) ***Mobile condition.*** All parked and stored Motor Vehicles within the City shall be maintained in a condition that they may move under their own power at any time except for vehicles that may be under repair in garages, body shops, or other enclosed Buildings used for the purposes as provided for below.

70.01 (C) ***Repairs.*** Repair of Motor Vehicles, Trailers, or Vessels or Parts thereof shall be made within a permanent fully enclosable Structure except:

70.01 (C)(1) Minor repairs including, but not limited to, changing a battery, replacing flat tires, and/or oil changes if done on an intermittent and on an as-needed basis provided the Motor Vehicle, Trailer, or Vessel is titled and/or registered to the property Owner at the address where the repair work is being conducted; and

70.01 (C)(2) Emergency road service.

70.01 (D) ***Above ground level repairs.*** No Motor Vehicle, Trailer, or Vessel may be handled, stored, or repaired on blocks or otherwise supported by any device designed to support such property above the ground except within the confines of an enclosed garage, body shop, or other Building properly used for such purposes.

70.01 (E) ***Sales, leases, rentals.*** No Motor Vehicle, Trailer, or Vessel shall be offered for sale, lease, or rental on Public Property within the City. Motor Vehicles being offered for sale on private Residential Property are permitted provided there is only one Motor Vehicle being offered for sale at any one time at any one residence and the property being offered for sale is currently registered or titled in the name of the occupant of the residence.

CHAPTER 71. TRAFFIC CONTROL AND ENFORCEMENT.

§ 71.01 ADOPTION OF FLORIDA STATUTES, CHAPTER 316.

The Florida Uniform Traffic Control Law, Florida Statutes Chapter 316, is hereby adopted, and shall be in full force and effect in order to ensure the regulation of Traffic throughout the City.

§ 71.02 TRAFFIC CONTROL AND ENFORCEMENT.

The City shall exercise jurisdiction over any private road or roads, or over any limited access road or roads owned or controlled by a special district, or Association located within its boundaries, provided that the City and the special district, or Association, owning or controlling such road or roads enter into a written agreement approved by the City Commission, for the City's Traffic control jurisdiction over the road or roads encompassed by such agreement.

§ 71.03 OPERATION OF GOLF CARTS ON PUBLIC AND PRIVATE RIGHTS OF WAY.

(A) The operation of Golf Carts on Public Rights-Of-Way, or Private Rights-Of-Way that are subject to an agreement with the City for Traffic control and enforcement, is prohibited, except as otherwise provided for in this Section.

(B) Seasonal Delivery Personnel are prohibited from using Golf Carts within Residential Areas on Public Rights-Of-Way that have a posted speed limit of 30 to 35 miles per hour. Notwithstanding the foregoing, Seasonal Delivery Personnel are permitted to use Golf Carts on Public Rights-Of-Way within Residential Areas that have a posted speed limit of 30 miles per hour or less for the limited purpose of delivering express envelopes and packages having a maximum size of 130 inches for the combined length and girth and weighing not more than 150 pounds from midnight October 15 until midnight December 31 of each year.

§ 71.10 PROHIBITION OF RIGHT-OF-WAY VENDORS AND SOLICITORS ON CERTAIN ROADS.

No Person shall act as a Right-Of-Way Vendor or Solicitor in or upon Royal Palm Boulevard, Glades Parkway, Weston Road, Bonaventure Boulevard, Saddle Club Road or Indian Trace Boulevard (including the Swales and Medians abutting such roads). Right-Of-Way Vendors or Solicitors are permitted on other Public Rights-Of-Way, but are prohibited from placing, displaying or storing any merchandise on the Public-Rights-Of-Way except on their Person.

CHAPTER 72. PARKING PROHIBITIONS.

§ 72.01 DISABLED PARKING SPACES.

72.01 (A) ***Disabled parking spaces.*** No Person shall Stop, Stand, or Park a vehicle within any parking space designated and marked for disabled parking in accordance with Florida Statutes § 316.1955 unless such vehicle displays a parking permit issued pursuant to Florida Statutes § 320.0848, or a license plate issued under Florida Statutes §§ 320.084, 320.0842, 320.0843, or 320.0845, and such vehicle is transporting a Person eligible for the parking permit issuance pursuant to Florida Statutes § 320.0848; however, any Person who is chauffeuring a disabled Person shall be allowed, without need for an identification parking permit, momentary parking in any such parking space, for the purpose of loading or unloading such disabled Person; and no penalty shall be imposed upon the driver for such momentary parking.

72.01 (B) ***Violation.***

72.01 (B)(1) Whoever violates this Section or Florida Statutes §316.1955 shall be penalized as provided in § 72.99.

72.01 (B)(2) Any unattended vehicle parked in violation of subsection (A) or Florida Statutes §316.1955 may, in addition to the fines provided for herein, be removed and the expense of the removal be charged to the Owner of the vehicle.

72.01 (B)(3) Fines collected because of violations of subsection (A) or Florida Statutes § 316.1955 shall be deposited in a separate City account to be used in the following manner:

72.01 (B)(3)(a) One-third shall be used to defray expenses for the administration of the collection of fines.

72.01 (B)(3)(b) Two-thirds shall be used to provide funds to improve accessibility and equal opportunity to qualified physically disabled Persons in the City and to provide funds to conduct public awareness programs in the City concerning physically disabled Persons.

§ 72.02 PARKING IN NON-MARKED SPACES.

No Person shall Park any Motor Vehicle upon any public Street or Right-Of-Way or on any Public or Private Property in other than a space marked for parking with appropriate pavement stripes. This provision shall not apply to residentially zoned properties (and the Rights-Of-Way adjacent thereto), to property actually occupied by a Single-Family Residence, Public Schools, and/or municipal facilities, nor authorized vehicles engaged in the Construction, maintenance or inspection of Roadway facilities or Landscaping.

§ 72.03 PARKING IN DESIGNATED OFFICIAL USE ONLY SPACES.

No Person shall Park any Motor Vehicle in any space designated as an official use only space unless so authorized by the City to do so for the purpose of conducting official business of the City.

§ 72.04 PARKING ON RESIDENTIAL PROPERTY.

72.04 (A) ***Parking on front, side or rear lawns.*** No vehicles shall be parked on front, side, or rear Lawns when visible from any adjacent Street or neighboring property.

72.04 (B) ***Parking on Swales.*** Vehicles may Park on Swales within the Public Right-Of-Way, in the direction of Traffic, provided that vehicles shall not block access to driveways, and shall not be parked on or across Sidewalks, or over a catch basin.

72.04 (C) ***Commercial vehicles, trailers, and vehicles with exposed Debris, equipment or materials.***

72.04 (C)(1) No Commercial Vehicles shall be parked or stored on any property unless in a fully enclosed garage, except commercial vehicles may be parked temporarily throughout the day during periods of approved Construction permitted by the City or when being used for pick-up, delivery, or the furnishing of commercial services.

72.04 (C)(2) No Trailers, boats, or habitable Motor Vehicles of any nature shall be parked or stored on any property unless in a fully enclosed garage, except temporarily for routine cleaning, loading, or unloading of motor homes or recreational vehicles. No living quarters shall be maintained while such motor home or recreational vehicle is so parked.

72.04 (C)(3) All Debris, equipment or materials in the bed or any other unenclosed area of a vehicle shall be covered with a suitable cover and properly Secured, so as to prevent the Debris, equipment or materials from being visible or blown by the wind. Debris, equipment or materials in any vehicle shall only be allowed to remain exposed and unsecured temporarily when actively being used or removed. If the Debris, equipment or materials has the potential of becoming airborne, then such Debris, equipment or materials must remain properly Secured at all times, except when being loaded or unloaded.

§ 72.05 USE OF OFF-STREET PARKING AND LOADING.

72.05 (A) ***Approved parking spaces.*** Parking spaces approved in conformance with this Section may be used only for parking of vehicles of Owners, Tenants, employees, and customers utilizing the Building or site served by such required parking space.

72.05 (B) ***Prohibited uses and activities.*** The following uses and activities shall not be permitted in required off-street parking facilities:

72.05 (B)(1) Parking to serve an Off-Site Building;

72.05 (B)(2) Storage, repair, or commercial display of any vehicles, equipment, or merchandise;

72.05 (B)(3) Parking of recreational vehicles, boats, and accessory equipment on non-residentially zoned or used property;

72.05 (B)(4) Parking of any vehicle that due to its size, shape, contents, or location creates an obstruction or public safety hazard or which cannot be contained within a single designated parking space; and

72.05 (B)(5) Overnight parking or storage of any Commercial Vehicles or Trailers owned, operated, or used in the business of a commercial occupant of a Building exhibiting commercial lettering in excess of four inches in height, and/or commercial Logos in excess of two square feet within 100 feet of any Public Right-Of-Way.

§ 72.06 COMMERCIAL VEHICLE AND TRAILER PARKING ON NON-RESIDENTIAL PROPERTY.

72.06 (A) No Commercial Vehicle shall be parked or stored on non-Residential Property unless such vehicle is owned or operated by the Owner or Tenant of the property, except Commercial Vehicles may be parked temporarily throughout the day during periods of approved Construction permitted by the City or when being used for pick-up, delivery, or the furnishing of commercial services. A Commercial Vehicle may also be parked temporarily while the vehicle's Owner and/or occupant is visiting a commercial Development.

72.06 (B) No Trailers, boats, or habitable Motor Vehicles of any nature shall be parked or stored on non-Residential Property, except to the extent permitted by a seasonal sales use or special event permit.

72.06 (C) All Debris, equipment or materials in the bed or any other unenclosed area of a vehicle shall be covered with a suitable cover and properly Secured, so as to prevent the Debris, equipment or materials from being visible or blown by the wind. Debris, equipment or materials in any vehicle shall only be allowed to remain exposed and unsecured temporarily when actively being used or removed. If the Debris, equipment or materials has the potential of becoming airborne, then such Debris, equipment or materials must remain properly Secured at all times, except when being loaded or unloaded.

§ 72.07 ACCESS FOR VEHICLES OTHER THAN AUTOMOBILES.

Required parking spaces, Parking Aisles, and driveways shall not be used as loading or parking areas for any type of vehicle other than automobiles.

§ 72.08 PARKING NOT TO OBSTRUCT TRAFFIC.

No Motor Vehicle, or any part thereof, shall be parked on any travel lane of any Public or Private Right-Of-Way.

§ 72.09 PARKING, STOPPING AND STANDING IN FIRE LANES.

No Motor Vehicles, except for emergency vehicles, shall Park, Stop or Stand in a fire lane, except when actually engaged in the loading or unloading of a disabled passenger.

ADMINISTRATION AND ENFORCEMENT

§ 72.90 PARKING ENFORCEMENT.

72.90 (A) ***Parking citation.*** Whenever any vehicle is found parked in violation of any Section of Chapter 71 or Chapter 72, such action is unlawful, and the Enforcement Officer or parking enforcement specialist finding such vehicle so parked shall issue a parking citation in a form to be approved by the City Manager and shall conspicuously affix the citation to the vehicle in violation. The citation shall notify the Person responsible for the vehicle to pay a fine in an amount set forth in §72.99 within ten business days at the place specified on the citation, excluding Saturdays, Sundays and legal holidays.

72.90 (B) ***Late fee.*** If the fine indicated on the citation is not paid within ten business days, excluding Saturdays, Sundays and legal holidays, a late fee of $12 shall be assessed for that violation to cover additional administrative costs.

§ 72.91 FAILURE TO COMPLY WITH NOTICE OF VIOLATION.

If an alleged violator does not respond to a notice or citation issued and affixed to the subject Motor Vehicle within a period of ten working days from the date of issuance, then the Clerk of the Courts of Broward County shall notify the alleged violator that if the applicable amount of the citation and the late fee are not paid within a period of ten working days from the date of notice, proceedings may be instituted in which a fine may be imposed in excess of that shown on the notice of citation.

§ 72.92 ADMINISTRATIVE APPEAL.

72.92 (A) ***File appeal.*** Any Person wishing to contest a parking violation citation may appeal such citation by making a written request for an administrative hearing to the Broward County Clerk of the Courts within ten working days of the date the citation was issued.

72.92 (B) ***Hearing date.*** The Clerk of the Courts of Broward County shall set the hearing within 60 calendar days of the date the citation was issued, giving the Person issued the citation at least seven working days' advance notice of the date of the hearing, such days excluding Saturday, Sunday and legal holidays. The notice shall be sent by regular mail to the address of the registered Owner of the vehicle or, in the event that the driver of the vehicle is not the Owner, the driver's address if the driver requests a hearing.

72.92 (C) ***Powers.***

72.92 (C)(1) The Person issued the citation may:

72.92 (C)(1)(a) Be represented by counsel;

72.92 (C)(1)(b) Call and examine witnesses;

72.92 (C)(1)(c) Introduce exhibits;

72.92 (C)(1)(d) Examine opposing witnesses on any relevant matter; and

72.92 (C)(1)(e) Impeach any witness.

72.92 (C)(2) ***Process for hearings.*** All hearings shall be conducted, insofar as practical, in accordance with the Florida Rules of Civil Procedure and the Florida Evidence Code. However, the general nature of the hearing shall be conducted in an informal manner. All irrelevant, immaterial or unduly repetitious evidence shall be excluded, but all other evidence of a type commonly relied upon by reasonable and prudent Persons in the conduct of their affairs shall be admissible, whether or not such evidence may be received in written form, and all testimony of parties and witnesses shall be made under Oath. Hearsay evidence may be used for the purpose of supplementing or explaining other evidence but it shall not be sufficient to itself support a finding, unless it would be admissible over objections in civil actions. Any Interested party or Person may make application and upon good cause shown may be allowed by the hearing Officer, in the reasonable exercise of such Officer's discretion, to intervene in a pending proceeding.

72.92 (D) ***Non-resident contest citation.*** Any Person who receives a parking citation may contest the citation in writing. Such Person must submit a written request to contest the citation by mail, accompanied by all evidence upon which the Person relies, within ten working days of the date the citation was issued. The written request to contest the citation by mail and evidence must be sent to the Clerk of the Courts of Broward County. The Clerk of the Courts of Broward County shall present the case to a hearing officer within 60 calendar days of the date the citation was issued. The evidence presented must include a notarized statement by the Person cited, which statement must identify the citation at issue by its number and date of issuance, must set forth the name and correct address of the Person cited and may contain argument in defense against the citation. The hearing officer will not consider any statement that is not notarized. The evidence submitted may include notarized statements of the witnesses. Such statements must include the name and address of each witness as well as the basis of the witness' knowledge about the facts asserted in the statement. The evidence submitted may also include such documents that are relevant and material to the disposition of the citation. All evidence submitted is subject to the evidentiary rules set forth above.

72.92 (E) ***Orders.*** Pursuant to Florida law, any Person who elects to appear before a hearing officer, or to contest a citation by mail, shall be deemed to have waived the right to pay the civil penalty amount set forth on the citation. The hearing or consideration of mailed-in admissible evidence will be decided within 30 calendar days after the request for hearing was made or the evidence to be considered was received. After a hearing or consideration of mailed-in admissible evidence, the hearing officer shall make a determination based on the greater weight of the evidence as to whether a parking violation has been committed and shall issue an order imposing a civil penalty of $ 257.00 for any violation of a disabled parking Law or ordinance or a civil penalty not to exceed $100 for a violation of any other parking ordinance or violation of Law, in addition to applicable late fees. The hearing officer may grant additional time to pay the civil penalty amount and late fees; otherwise such fines are due and payable within ten working days from the date the order of the hearing officer was issued. All orders shall be in writing and shall be signed and dated by the hearing officer. If, at the conclusion of the hearing, or consideration of mailed-in admissible evidence, the hearing officer orders a dismissal of the citation because no violation was found, the hearing officer shall so state and issue an order of dismissal in writing signed and dated by the

hearing officer, which shall contain findings of the facts supporting the order. A copy of such order will be forwarded to the alleged violator. An order of the hearing officer may be appealed by the filing of a petition of a writ of certiorari in the Circuit Court of the Seventeenth Judicial Circuit in and for Broward County by any party receiving an adverse ruling within 30 calendar days from the date the order was issued.

§ 72.99 PENALTY.

Violation Category	Fine
Disabled	$257.00 (1)(2)
Fire Lane	$105.00 (1)
Fire Hydrant	$105.00 (1)
All Other	$105.00 (1)

(1) Includes $5 surcharge for the purpose of funding school crossing guard programs as permitted by Florida Statutes § 318.21(11)(a).

(2) Includes $2 assessment for the purpose of funding teen court programs as permitted by Florida Statutes §938.19, and implemented by §10-5 of the Broward County Code of Ordinances.

CHAPTER 73. COMMERCIAL VEHICLE WEIGHT AND LOAD RESTRICTIONS.

§ 73.01 PURPOSE.

The purpose of this Chapter is to promote the public health, safety and general welfare upon the Streets, Roadways and Highways of the City by regulating the wheel and Axle Loads and gross vehicle weights of certain vehicles; to provide for the assessment of fees; and to provide penalties for the violation of this Chapter.

§ 73.02 ADOPTION.

Except as otherwise provided in this Section, the City expressly adopts the weight and load restrictions and enforcement procedures for Commercial Vehicles as promulgated in Florida Statutes, Chapter 316, Rules and Regulations contained in Chapter 49 Code of Federal Regulations 390-397 and North American Driver Out-of-Service Criteria.

§ 73.03 JURISDICTION.

The jurisdiction for determining restrictions as to oversize/overweight vehicles is given to the City by the State through the provisions of Florida Statutes, Chapter 316, specifically §§ 316.006 and 316.555.

§ 73.04 VIOLATION.

It is a violation of this Chapter for any Person to drive or move, or for the Owner to cause or knowingly permit to be driven or moved, on any Street, Roadway or Highway in the City, any vehicle or vehicles of a size or weight exceeding the limitations stated in this Chapter or otherwise in violation of this Chapter.

§ 73.05 MAXIMUM WEIGHTS.

73.05 (A) ***Weight limitation.*** The gross weight imposed on the Street, Roadway or Highway by the wheels of any one axle of a vehicle shall not exceed 20,000 pounds.

73.05 (B) ***Maximum load.*** Subject to the limit upon the weight imposed upon the Streets, Roadways and Highways through any one axle as set forth herein, the total weight with load imposed upon the Street, Roadway or Highway by all the axles of a vehicle or combination of vehicles shall not exceed the gross weight given for the respective distance between the first and last axle of the vehicle or combination of vehicles, measured longitudinally to the nearest foot as set forth in the following table:

Distance in Feet Between First and Last Axles	Maximum Load in Pounds on all Axles of Vehicles or Combination of Vehicles
4.....	40,000
5.....	40,000
6.....	40,000
7.....	40,000
8.....	40,000
9.....	44,140
10.....	44,980
11.....	45,810
12.....	46,640
13.....	47,480
15.....	49,150
16.....	49,980
17.....	50,810
18.....	51,640
19.....	52,480
20.....	53,310
21.....	54,140
22.....	54,980
23.....	55,810
24.....	56,640
25.....	57,470
26.....	58,310
27.....	59,140
28.....	59,970
29.....	60,810
30.....	61,640
31.....	62,470
32.....	63,310
33.....	64,140
34.....	64,970
35.....	65,800
36.....	66,610

73.05 (C) ***Gross weight formula.*** With respect to those Highways not in the Interstate Highway System, in all cases in which it exceeds State Law in effect on January 4, 1975, the overall gross weight on the vehicle or combination of vehicles, including all enforcement tolerances, shall be as determined by the following formula:

$$W = \frac{500(LN + 12N + 36)}{N - 1}$$

Where W = overall gross weight of the vehicle to the nearest 500 pounds; L = distance in feet between the extreme of the external axles; and N = number of axles on the vehicle. However,

such overall gross weight of any vehicle of combination of vehicles may not exceed 80,000 pounds including all enforcement tolerances.

73.05 (D) ***Exemption from axle spacing requirements.*** Dump trucks, concrete mixing trucks, trucks engaged in waste collection and disposal, and fuel oil and gasoline trucks designed and constructed for special type work or use, when operated as a single unit, shall be subject to all safety and operational requirements of Law, except that any such vehicle need not conform to the axle spacing requirements of this Section provided that such vehicle shall be limited to a total gross load, including the weight of the vehicle, of 20,000 pounds per axle plus Scale Tolerances and shall not exceed 550 pounds per inch width tire surface plus Scale Tolerances. No vehicle operating pursuant to this Section shall exceed a gross weight, including the weight of the vehicle and Scale Tolerances, of 70,000 pounds. Any vehicle violating the weight provisions of this Section shall be penalized as provided in § 73.06.

73.05 (E) ***Rules, enforcement and notice.*** The City shall adopt rules consistent with the Department of Transportation to implement this Section, shall enforce this Section and the rules adopted hereunder, and shall publish and distribute tables and other publications as deemed necessary to inform the public.

73.05 (F) ***Vehicles in excess of gross weight limitation.*** Except as hereinafter provided, no vehicle or combination of vehicles exceeding the gross weights specified in subsections (B), (C) and (D) shall be permitted to travel on the public Streets, Roadways or Highways within the City.

§ 73.06 WEIGHT AND LOAD UNLAWFUL; SPECIAL FUEL AND MOTOR FUEL TAX ENFORCEMENT; INSPECTION; PENALTY; REVIEW.

73.06 (A) ***Weighing of vehicle.*** Any designated Officer of the City or of the Department of Transportation having reason to believe that the weight of a vehicle and load is unlawful is authorized to require the driver to Stop and submit to a weighing of the same by means of either portable or fixed scales and may require that such vehicle be driven to the nearest weigh station or public scales, provided such a facility is within five miles. Upon a request by the vehicle operator, the Officer shall weigh the vehicle at fixed scales rather than by portable scales if such a facility is available within five miles. Anyone who refuses to submit to such weighing obstructs an Officer pursuant to Florida Statutes § 843.02, and is guilty of a misdemeanor of the first degree, punishable as provided in Florida Statutes §§ 775.082 or 775.083. Anyone who knowingly and willfully resists, obstructs or opposes an Officer while refusing to submit to such weighing by resisting the Officer with violence to the Officer's person pursuant to Florida Statutes § 843.01, is guilty of a felony of the third degree, punishable as provided in Florida Statutes §§ 775.082, 775.083 or 775.084.

73.06 (B) ***Violations.***

73.06 (B)(1) Whenever an Officer, upon weighing a vehicle or combination of vehicles with load, determines that the axle weight or gross weight is unlawful, the Officer may require the driver to Stop the vehicle in a suitable place and remain standing until a determination can be made as to the amount of weight thereon and, if overloaded, the amount of penalty to be assessed as provided herein. However, any gross weight over and

beyond 6,000 pounds beyond the maximum herein set shall be unloaded and all material so unloaded shall be cared for by the Owner or Operator of the vehicle at the risk of such Owner or operator. Except as otherwise provided for in Florida Statutes, Chapter 316, to facilitate compliance with and enforcement of the weight limits established in § 73.05, weight tables published pursuant to Florida Statutes § 316.535(7) shall include a 10% Scale Tolerance and shall reflect the maximum scaled weights allowed any vehicle or combination of vehicles. Notwithstanding any other provision of the weight Law, if a vehicle or combination of vehicles does not exceed the gross, external bridge, or internal bridge weight limits imposed in § 73.05 and the driver of such vehicle or combination of vehicles can comply with the requirements of Florida Statutes, Chapter 316 by shifting or equalizing the load on all wheels or axles, and does so when requested by the proper authority, the driver shall not be held to be operating in violation of the weight limits.

73.06 (B)(2) The Officer shall inspect the license plate or registration certificate of the Commercial Vehicle, as defined in Florida Statutes § 316.003(66), to determine if its gross weight is in compliance with the declared gross vehicle weight. If its gross weight exceeds the declared weight, the penalty shall be $0.05 per pound on the difference between such weights. In those cases when the Commercial Vehicle, as defined in Florida Statutes § 316.003(66), is being operated over the Streets, Roadways or Highways of the City with an expired registration or with no registration from this or any other jurisdiction or is not registered under the applicable provisions of Florida Statutes, Chapter 320, the penalty herein shall apply on the basis of $0.05 per pound on that scaled weight which exceeds 35,000 pounds on laden truck tractor- semitrailer combinations or tandem trailer truck combinations, 10,000 pounds on laden straight trucks or straight truck-trailer combinations, or 10,000 pounds on any unladen Commercial Motor Vehicle. If the license plate or registration has not been expired for more than 90 days, the penalty imposed under this Section may not exceed $1,000.00. In the case of special mobile equipment as defined in Florida Statutes § 316.003(48), which qualifies for the license tax provided for in Florida Statutes § 320.08(5) (b), being operated on the Streets, Roadways or Highways of the City with an expired registration or otherwise not properly registered under the applicable provisions of Florida Statutes, Chapter 320, a penalty of $75.00 shall apply in addition to any other penalty which may apply in accordance with Florida Statutes, Chapter 316. A vehicle found in violation of this Section may be detained until the Owner or operator produces evidence that the vehicle has been properly registered. Any costs incurred by the retention of the vehicle shall be the sole responsibility of the Owner. A Person who has been assessed a penalty pursuant to this Section for failure to have a valid vehicle registration certificate pursuant to the provisions of Florida Statutes, Chapter 320, is not subject to the delinquent fee authorized in Florida Statutes § 320.07, if such Person obtains a valid registration certificate within ten working days after such penalty was assessed.

73.06 (B)(3) Weight limits established and posted for a road or bridge pursuant to Florida Statutes § 316.555 and weight limits specified in special permits issued pursuant to Florida Statutes § 316.550 shall be deemed to include all allowable tolerances. In those cases when a vehicle or combination of vehicles exceeds the weight limits established and posted for a road or bridge pursuant to Florida Statutes § 316.555, or exceeds the weight limits permitted in a special permit issued pursuant to Florida Statutes § 316.550, the penalty shall be $0.05 per pound on the difference between the scale weight of the vehicle and the weight limits for such posted road or bridge or permitted in such special permit. However,

if a special permit is declared invalid in accordance with rules promulgated pursuant to Florida Statutes § 316.550, the penalties imposed in subsection (C) below shall apply to those weights that exceed the limits established in § 73.05.

73.06 (C) ***Penalties.*** Any Person who violates the overloading provisions of this Chapter shall be conclusively presumed to have damaged the Streets, Roadways or Highways of this City by reason of such overloading, which damage is hereby fixed as follows:

73.06 (C)(1) When the excess weight is 200 pounds or less than the maximum herein provided, the penalty shall be $10.00;

73.06 (C)(2) Five cents per pound for each pound of weight in excess of the maximum herein provided when the excess weight exceeds 200 pounds. However, whenever the gross weight of the vehicle or combination of vehicles does not exceed the maximum allowable gross weight, the maximum fine for the first 600 pounds of unlawful axle weight shall be $10.00;

73.06 (C)(3) An apportioned Motor Vehicle, as defined in Florida Statutes § 320.01, operating on the Streets, Roadways or Highways of this City without being properly licensed and registered shall be subject to the penalties as herein provided;

73.06 (C)(4) Vehicles operating on the Streets, Roadways or Highways of this City from nonmember International Registration Plan jurisdictions that are not in compliance with the provisions of Florida Statutes § 316.605, shall be subject to the penalties as herein provided.

73.06 (C)(5) The defendant in an action hereunder may seek to rebut the presumption of damage set forth in subsection (C).

73.06 (D) ***Registration requirement.***

73.06 (D)(1) No Commercial Vehicle, as defined in Florida Statutes § 316.003(66) shall be operated over the Streets, Roadways or Highways of this City unless it has been properly registered under the provisions of Florida Statutes § 207.004. Whenever any Law Enforcement Officer identified in Florida Statutes § 207.023(1), upon inspecting the vehicle or combination of vehicles, determines that the vehicle is in violation of Florida Statutes § 207.004, a penalty in the amount of $50.00 shall be assessed, and the vehicle may be detained until payment is collected by the Officer.

73.06 (D)(2) In addition to the penalty provided for in paragraph (D)(1), the vehicle may be detained until the Owner or operator of the vehicle furnishes evidence that the vehicle has been properly registered pursuant to Florida Statutes § 207.004. Any Officer or agent of the Department of Transportation may issue a temporary fuel use permit and collect the appropriate fee as provided for in Florida Statutes § 207.004(4). Notwithstanding the provisions of this Section, all permit fees collected pursuant to this subsection 73.06 (D)(2) shall be transferred to the Department of Highway Safety and Motor Vehicles to be allocated pursuant to Florida Statutes § 207.026.

73.06 (D)(3) Any Person aggrieved by the imposition of penalties pursuant to subsection (D) may apply to the City's Special Magistrate as provided for in subsection (H), for modification, cancellation, or revocation of the penalty, and the Special Magistrate is authorized to modify, cancel, revoke or sustain such penalty.

73.06 (E) ***Lien.*** In addition to the right to prosecute violations in Broward County Court, whenever any Person violates the provisions of this Chapter and becomes indebted to the City because of such violation in the amounts aforesaid and refuses to pay said penalty, such penalty shall become a lien upon the Motor Vehicle, and the same may be foreclosed by the City in a court of equity. It shall be presumed that the Owner of the Motor Vehicle is liable for the sum. Any Person claiming an interest in the seized Motor Vehicle may, at any time after the lien of the City attaches to the Motor Vehicle, obtain possession of the seized vehicle by filing a good and sufficient forthcoming cash bond with the Officer having possession of the vehicle, payable to the City in twice the amount of the City's lien. It shall be presumed that the Owner of the Motor Vehicle is liable for the penalty imposed under this Section. Upon the posting of such bond with the Officer making the seizure, the vehicle shall be released and the bond shall be forwarded to the City for safekeeping. The lien of the City against the Motor Vehicle aforesaid shall be foreclosed in equity, and the ordinary rules of court relative to the proceedings in equity shall control. If it appears that the seized vehicle has been released to the defendant upon defendant's forthcoming bond, the City shall take judgment of foreclosure against the property itself, and judgment against the defendant for the amount of the lien, including cost of proceedings. After the rendition of the decree, the City may, at its option, proceed to sue the defendant for the amount recovered as aforesaid or direct the sale of the vehicle under foreclosure.

73.06 (F) ***Receipt requirement.*** Any Officer or agent collecting the penalties herein imposed shall give to the Owner or driver of the vehicle a receipt for all penalties collected. Such Officers or agents shall cooperate with the Owners or drivers of Motor Vehicles so as not to delay unduly the vehicles.

73.06 (G) ***Payment.*** Pursuant to Florida Statutes §§ 316.302 and 316.545, penalties and fees are due and payable at the time of issuance. Payment shall be made for the amount of the assessment in cash, money order, or cashier's check and shall be made payable to the City.

73.06 (H) ***Special Magistrate.*** Any Person aggrieved by the imposition of a civil penalty pursuant to this Chapter or Florida Statutes, §§ 316.3025, 316.550 may apply to the City's Special Magistrate for a modification, cancellation or revocation of the penalty; and the Special Master is authorized to modify, cancel, revoke or sustain such penalty.

§ 73.07 SPECIAL PERMITS.

An oversize or overweight vehicle or load thereon may not enter onto or be operated on a public road in the City unless the Owner or Operator of such vehicle has first obtained the special permit pursuant to Florida Statutes § 316.550. Any Owner or Operator holding such special permit shall be exempt from the limitations established in § 73.05, but must abide by the limitations as described in the special permit.

§ 73.08 WEIGHT, LOAD, LIMITS LOWERED.

The City may prescribe, by notice hereinafter provided for, loads and weights lower than the limits prescribed in this Chapter and other Laws, whenever in its judgment any road or part thereof or any bridge or culvert shall, by reason of its design, deterioration, rain, or other climatic or natural causes be liable to be damaged or destroyed by Motor Vehicles, Trailers, or semitrailers, if the gross weight shall exceed the limits prescribed in said notice. The City may, by like notice, regulate or prohibit, in whole or in part, the operation of any specified class or size of Motor Vehicles, Trailers, or semitrailers on any Streets, Roadways or Highways or specified Parts thereof under its jurisdiction, whenever in its judgment, such regulation or prohibition is necessary to provide for the public safety and convenience on the Streets, Roadways or Highways, or Parts thereof, by reason of Traffic density, intensive use thereof by the traveling public, or other reasons of public safety and convenience. The notice or substance thereof shall be posted at conspicuous places at terminals of all intermediate crossroads and road junctions with the section of Street, Roadway or Highway to which the notice shall apply. After any such notice has been posted, the operation of any Motor Vehicle or combination contrary to its provisions shall constitute a violation of this Chapter.

§ 73.09 DAMAGE TO STREETS, ROADWAYS, HIGHWAYS; LIABILITY OF DRIVER AND OWNER.

Any Person driving or moving any vehicle or combination of vehicles, object, or contrivance upon any Street, Roadway or Highway or Highway Structure shall be liable for all damages that the Highway or Structure may sustain as a result of any illegal operating, driving, or moving of such vehicle or combination of vehicles, object, or contrivance, whether or not such damage is a result of operating, driving, or moving any vehicle or combination of vehicles, object, or contrivance weighing in excess of the maximum weights or exceeding the maximum size as provided in this Chapter but authorized by special permit issued pursuant to Florida Statutes § 316.550. Whenever the driver is not the Owner of the vehicle or combination of vehicles, object, or contrivance but is so operating, driving, or moving the same with the express or implied permission of the Owner, then the Owner and driver shall be jointly and severally liable for any such damage. Such damage may be recovered in any civil action brought by the authorities in control of the Street, Roadway or Highway or Highway Structure.

TITLE VIII: BUSINESS-REGULATIONS AND STANDARDS

CHAPTER 80. HOME OCCUPATIONS.

§ 80.01 HOME OCCUPATIONS.

80.01 (A) ***Location.*** Home Occupations, subject to the provisions contained herein, shall be permitted in all residential zoning districts. Home Occupations must be secondary to the Use of the Dwelling for residential purposes and shall not change the character of the Dwelling Unit thereof. In any instance where a Dwelling Unit is used to conduct a Home Occupation consistent herein, a Business Tax Receipt shall be required. This applies even where a regular Business Tax Receipt has been issued for the same Business and to the same Applicant at another location within or outside the boundaries of the City.

80.01 (B) ***General requirements.*** When permitted, Home Occupations shall be conducted in accordance with the following provisions and with any other restrictions that are contained within the individual residential zoning district regulations:

80.01 (B)(1) No Person other than individuals residing in the Dwelling Unit shall be engaged in the Home Occupation.

80.01 (B)(2) There shall be no display of goods, machinery, or equipment nor any performance of work visible or audible from any Street or adjoining property, nor shall there be any Sign identifying or providing any information of any nature regarding the Home Occupation. There shall be no retail sales, repair, manufacturing, or the storage of merchandise on the Premises. This includes hazardous materials.

80.01 (B)(3) No equipment or process shall be used in any Home Occupation which creates noise, vibration, glare, fumes, odors, or electrical interference detectable to the normal senses off the Premises.

80.01 (B)(4) No Home Occupation shall generate or attract unsafe, excessive, or hazardous vehicular or pedestrian Traffic to the Dwelling Unit.

80.01 (B)(5) No Home Occupation shall be conducted in any accessory Building.

80.01 (B)(6) No Home Occupation shall occupy more than 25% of the total floor area of a Dwelling Unit exclusive of any open porch, attached garage, or similar space not intended to be occupied as living quarters.

80.01 (B)(7) The Applicant may use his or her home address only for receiving mail and not for any advertising purposes.

80.01 (B)(8) No employees or independent contractors of any type shall be permitted at the Dwelling Unit at any time in connection with the Home Occupation

80.01 (B)(9) Consultation with one individual at a time or the giving of individual instruction to one Person at a time shall be deemed a Home Occupation. Group

consultation or the giving of group instruction of any type shall be considered to be a business enterprise not eligible for consideration as a Home Occupation

80.01 (C) ***Family day care homes.*** "Family day care homes," as defined in Florida Statutes §402.302(7), may be permitted in the City provided the Owner or operator provide evidence of compliance with all provisions set forth in the governing statute, and compliance with any ordinance or resolution adopted by Broward County pursuant to the provisions set forth in the above-referenced statute.

80.01 (D) ***Business Tax Receipt application.*** A Person desiring to conduct a Home Occupation shall submit a completed application, including a signed affidavit, on forms provided by the City, and the applicable Business Tax as provided in § 40.01, to the City.

80.01 (E) ***Right of inspection.*** The Applicant acknowledges that upon issuance of a Business Tax Receipt the City shall have the right to inspect, at reasonable times, the Premises upon which the Home Occupation is conducted to insure compliance with the foregoing standards and conditions, and to investigate complaints, if any.

80.01 (F) ***Exclusions.*** An individual who, in the normal course of business, brings work materials into the residence for review, preparation, dictation, or other routine process including, but not limited to, jobs which are all "take home" work from another business location or employment shall not, by itself, be deemed to be engaged in a Home Occupation.

CHAPTER 81. VALET PARKING.

§ 81.01 PURPOSE.

The purpose of this Chapter is to:

81.01 (A) ***Reduce Disruption of Traffic.*** Reduce the disruption of vehicular and pedestrian Traffic that valet parking operations may create;

81.01 (B) ***Minimize Hazardous Conditions.*** Minimize hazardous conditions that valet parking operations may create in order to protect the health, safety, and welfare of the public; and

81.01 (C) ***Promote Safety.*** Promote the safe and legal operation of Valet Parking Services for the use and convenience of businesses and the general public.

§ 81.02 LICENSE REQUIRED.

81.02 (A) ***Requirement***. No Person shall operate a Valet Parking Service unless licensed to do so by the City. Such license shall be nontransferable.

81.02 (B) ***Exemption***. This Chapter only applies to Valet Parking Service operating on behalf of or in conjunction with a Commercial Establishment or commercial activity. Valet parking provided not more often than two times per Year is hereby exempt from the requirements of this Chapter so long as it does not obstruct any Public or Private Right-Of-Way, but may be subject to other restrictions.

§ 81.03 APPLICATION.

A Person wanting to utilize a Valet Parking Service must apply in writing to the City for a Valet Parking Service license. The application must be completed by the commercial property Owner to be benefitted by the proposed Valet Parking Service. The Applicant must provide the following information:

81.03 (A) ***Contact information.*** The names, address and telephone numbers of:

81.03 (A)(1) The Applicant; and

81.03 (A)(2) Any independent contractor the Applicant intends to use as a Valet Parking Operator.

81.03 (B) ***Location.*** The proposed location of any:

81.03 (B)(1) Valet parking podium;

81.03 (B)(2) Stand;

81.03 (B)(3) Sign;

81.03 (C) ***Valet Areas, location and number.*** The location and number of the Valet Areas;

81.03 (D) ***Off street parking information.*** The location of the off street parking area or facility the Valet Parking Operator intends to use for the storing of vehicles, and a signed contract or agreement showing that the Valet Parking Operator has acquired the legal right to store vehicles in that area or facility; and

81.03 (E) ***Proof of insurance.*** Proof of insurance as provided for in § 81.10 of this Chapter.

§ 81.04 FEES.

The annual fee for a Valet Parking Service license per Valet Area, and the maximum amount of such fee, shall be set by resolution of the City Commission.

§ 81.05 DENIAL, REVOCATION, OR SUSPENSION OF LICENSE.

81.05 (A) ***Denial.*** The City Manager shall deny any application if:

81.05 (A)(1) The Applicant fails to comply with any of the requirements of this Chapter or any other applicable Law;

81.05 (A)(2) The Applicant makes any false statement of material fact on the Valet Parking Service application;

81.05 (A)(3) The City Manager determines that the operation of a Valet Parking Service at the applied for location would:

81.05 (A)(3)(a) Endanger the health, safety or welfare of Persons or property;

81.05 (A)(3)(b) Unreasonably interfere with pedestrian or vehicular Traffic;

81.05 (A)(3)(c) Unreasonably interfere with the use of any pole, Sign, fire hydrant, traffic signal or any other object already permitted at or near the proposed Valet Parking service location;

81.05 (A)(3)(d) Unreasonably interfere with any other permitted Use permitted at or near the proposed Valet Parking Service location;

81.05 (A)(3)(e) Not be in compliance with the submitted and approved operation plan as required by §§ 81.06 (B) and (C); or

81.05 (A)(3)(f) Otherwise not be in the public interest.

81.05 (B) ***Revocation.*** The City Manager may revoke an existing Valet Parking Service license if:

81.05 (B)(1) The licensee fails to comply with the requirements of the Valet Parking Service license, the Police Department, or any other applicable Law;

81.05 (B)(2) The licensee makes any false statement of material fact on the Valet Parking Service application;

81.05 (B)(3) The City Manager determines that the operation of a Valet Parking Service at the applied for location:

81.05 (B)(3)(a) Endangers the health, safety or welfare of Persons or property;

81.05 (B)(3)(b) Unreasonably interferes with pedestrian or vehicular Traffic;

81.05 (B)(3)(c) Unreasonably interferes with the use of any pole, Sign, fire hydrant, traffic signal or any other object already permitted at or near the proposed Valet Parking Service location;

81.05 (B)(3)(d) Unreasonably interferes with any other Use permitted at or near the proposed Valet Parking Service location;

81.05 (B)(3)(e) Is not in compliance with the submitted and approved operation plan as required by § 81.06 (B) and (C); or

81.05 (B)(3)(f) Otherwise is not in the public interest.

81.05 (C) ***Suspension.*** The City Manager may temporarily suspend a Valet Parking Service license in an Emergency or when the area is needed for other uses including, but not limited to, Construction, maintenance, or repair of a Street, Utility, or any other component of the City infrastructure.

§ 81.06 RULES AND REGULATIONS.

In addition to any other requirements of this Chapter, any Valet Parking Operator authorized by the City to provide Valet Parking Service shall comply with the following requirements:

81.06 (A) ***Business Tax Receipt.*** The Valet Parking Operator shall possess a valid Business Tax Receipt to operate the Valet Parking Service within the City;

81.06 (B) ***Traffic plan.*** The Valet Parking Operator shall submit a written Traffic plan, approved by the City Manager, which shows in detail the operation of the valet service, including, but not limited to, the size, shape, and location of the valet parking area and the size, shape, location, and support of any signage;

81.06 (C) ***Compliance with plan.*** The parking operator shall operate in accordance with the submitted and approved plan;

81.06 (D) ***Key control booth.*** The Valet Parking Operator shall maintain a key control booth at all valet parking locations until all cars have been claimed, or must provide an alternative method for customers to obtain their keys;

81.06 (E) ***Loading or unloading of passengers.*** The Valet Parking Operator shall not load or unload passengers or store cars except as allowed by this Chapter;

81.06 (F) ***Storage of cars prohibited.*** The Valet Parking Operator shall not store cars in the Valet Areas . A vehicle is considered stored if it remains in the Valet Areas or zone for more than 15 minutes;

81.06 (G) ***Compliance with applicable Laws.*** The Valet Parking Operator shall comply with all applicable federal, State, and local statutes, Laws, ordinances, rules, and regulations relating to Traffic safety;

81.06 (H) ***Articles of incorporation.*** If incorporated, the Valet Parking Operator shall provide the City with a copy of its articles of incorporation;

81.06 (I) ***New application requirement for a change.*** A licensee wishing to change its location, size, or hours of operation must submit a new application to the City Manager as provided in § 81.03 of this Chapter;

81.06 (J) ***Prohibition of Interference with Traffic flow.*** The Valet Parking Operator shall not interfere with the regular flow of pedestrian or vehicular Traffic; and

81.06 (K) ***Notification of fee.*** The Valet Parking Operator shall maintain a Sign adjacent to the Valet Area that identifies the fee for the Valet Parking Service or states that such service is free, the Operator's corporate name, address and telephone number as well as City Business Tax Receipt number, all in not less than 1½ inch letters. This information must also be printed on the customer's portion of the valet ticket.

§ 81.07 TRAFFIC CONTROL DEVICES.

81.07 (A) ***Traffic Control Devices.*** The City may require the licensee (at its sole cost and expense) to set up the appropriate Traffic Control Devices as approved by the City in order to facilitate the movement of Traffic in an expeditious manner. No Traffic Control Devices or signage of any kind shall be placed upon or within Traffic Lanes without the prior approval of the City Manager.

81.07 (B) ***Threat to public safety.*** If, in the determination of the City Manager, a valet parking operation creates or contributes to an unsafe or hazardous condition, or impacts adjacent Streets or Sidewalks to the extent that it threatens the safety of vehicular and/or pedestrian movement in the area, then the City Manager may require the Valet Parking Operator to provide, at its sole cost and expense, off-duty, uniformed police Officers to direct Traffic in the Traffic Lanes adjacent to the valet parking zone. If, in the sole determination of the City Manager, the hiring of such Officers to direct Traffic does not adequately address the threat to public safety, then the City Manager, in the interest of protecting the public health, safety, and welfare, may order the

termination of the Valet Parking Service at a particular location until the threat to public safety has been adequately addressed.

§ 81.08 EMPLOYEES.

Employees of the Valet Parking Operator shall at all times comply with the following requirements:

81.08 (A) ***Florida Driver's License.*** All employees shall possess and carry a valid Florida Driver's license;

81.08 (B) ***Payroll.*** All employees must be on the payroll of the Valet Parking Operator and not independent contractors;

81.08 (C) ***Shirt identification requirement.*** All employees shall wear a shirt identifying the Valet Parking Operator; and

81.08 (D) ***Compliance with applicable Laws.*** All employees shall comply with the requirements of this Chapter and all applicable Laws, statutes, ordinances, rules and regulations relating to Traffic safety.

§ 81.09 UNLOADING, LOADING AND STORAGE OF VEHICLES.

81.09 (A) ***Unloading and Loading of Vehicles.*** The unloading and loading of vehicles shall be allowed within City-approved Valet Areas only. The unloading and loading of vehicles within Traffic Lanes or outside the City-approved Valet Area is a violation of this Chapter and subject to the penalty provided in § 2.99.

81.09 (B) ***Storage of Vehicles***.

81.09 (B)(1) The storage of vehicles within a City-approved Valet Areas or zone is prohibited. A vehicle is considered stored if it remains in the Valet Area or zone for more than 15 minutes.

81.09 (B)(2) On Private Property. The Valet Parking Operator may store vehicles on private Lots that are properly permitted. The Valet Parking Operator shall provide to the City Manager a copy of the proper City Business Tax Receipt issued to the parking facility Owner and documentation from the parking facility Owner authorizing the Valet Parking Operator to use the facility. The Valet Parking Operator may not utilize any storage area that is closer to the Building than at least 50% of the parking spaces serving that Building.

81.09 (B)(3) A Valet Parking Operator wishing to store its vehicles in a parking area or facility other than the one(s) identified in the license application must notify the City Manager a minimum of 30 days before the change is to take place. The same documentation requirement applies for a change as for a new application.

§ 81.10 INSURANCES.

81.10 (A) ***Required limits of liability.*** The Valet Parking Operator shall purchase, maintain, and keep in full force and effect insurance written for not less than the limits of liability set by resolution of the City Commission or required by Law, whichever is greater.

81.10 (B) ***Ratings.*** All insurance companies providing the required coverage shall be rated A– or better by Best's Rating Guide.

81.10 (C) ***City as additional insured.*** The City shall be named as an additional insured on all liability insurance required except Workers' Compensation.

81.10 (D) ***Insurance certificates.*** Insurance certificates evidencing all required insurance coverage and providing that the coverage shall not be canceled or modified without 30 days prior written notice to the City shall be filed with the City Manager prior to the operation of the valet service.

§ 81.11 INDEMNIFICATION OF CITY.

The Valet Parking Operator shall agree in writing to indemnify, hold harmless and defend the City, its representatives, employees, and elected and appointed officials, from and against all liability, claims, damages, suits, losses, and expenses of any kind, including reasonable attorney's fees and costs (and reasonable attorney's fees and costs on appeal) arising from its use of public Streets, Sidewalks, or public parking areas in providing Valet Parking Service and arising from any negligent act, omission or error of the Valet Parking Operator , its agents or employees, or arising from the failure of the Valet Parking Operator , its agents or employees, to comply with each and every requirement of this Chapter or with any other federal, State, or local Traffic Law.

CHAPTER 82. EXTENDED OPERATING HOURS.

§ 82.01 EXTENDED OPERATING HOURS.

82.01 (A) ***Permit required.*** No business shall be allowed to engage in the retail sale of consumer goods or services between the hours of 1:00 a.m. and 5:00 a.m., unless it obtains an extended operating hours permit from the City Manager under this Section.

82.01 (B) ***Criteria.*** The City Manager shall consider the following criteria in evaluating the application, revocation, and renewal of an extended operating hours permit:

82.01 (B)(1) The amount of available parking in relation to the demands created by the extra hours of operation, especially with regard to the adverse impact on adjacent Residential Areas of any illegal or hazardous parking.

82.01 (B)(2) The amount and degree of law enforcement activities generated by the operation of the business.

82.01 (B)(3) The adverse effects, if any, that the extended hours of operation will have on neighboring properties, including but not limited to, noise, odor, Litter, light and additional Traffic.

82.01 (B)(4) The potential affect of the extended hours of operation on the general welfare and safety of the public.

82.01 (C) ***Compliance with conditions.*** The City Manager may require, as a condition of the privilege of extended hours of operation, compliance with any reasonable conditions necessary to mitigate or eliminate the adverse effects of such extended hours. These conditions may include, without being limited to, provision by the Owner or operator of, at his/her expense, additional parking, security personnel, and screening and buffering from nearby properties. The City Manager may also require that the permitted establishments be wholly enclosed, soundproofed, and air-conditioned, with any windows, doors or other openings be kept closed, except from normal and emergency ingress and egress, in order that noise emanating therefrom will not disturb the peace and quiet of the neighborhood. The Owner shall record in the public records of Broward County, Florida, a covenant running with the land that expressly sets forth any and all conditions required.

82.01 (D) ***Permit term.*** Once issued, the permit shall be valid until September 30th in the year in which the permit is granted. Thereafter, the permit must be renewed annually.

82.01 (E) ***Permit is a privilege.*** The extended operating hours permit is a privilege not a right. Nothing contained in this Section shall be construed to create any right to the issuance or renewal of an extended operating hours permit.

82.01 (F) ***Alcoholic Beverage sales.*** Nothing contained in this Section shall be construed to extend the hours in which Alcoholic Beverages may be sold on the permitted Premises.

82.01 (G) ***Permit fee.*** The annual permit fee for issuance of the said permit shall be established and amended by resolution of the City Commission.

82.01 (H) ***Revocation by City Manager.*** If, prior to renewal time, the City Manager determines that any permittee has either violated a condition or is operating in a manner inconsistent with the criteria specified in subsection (B) or (C), he/she may revoke the extended operating hours permit. In accordance with §2.15(B) of this Code, the permittee may appeal the revocation to the City Commission.

82.01 (I) ***Cost recovery.*** The costs incurred by the City in investigating any of the matters included within the criteria of subsections (B) or (C) in either an application, revocation, or renewal proceedings of an establishment's permit shall be paid by the permittee to the City. These costs shall be in addition to the initial application fee and annual permit fee required by this Section.

82.01 (J) ***License display***. The permit shall be conspicuously displayed within ten feet of the main entrance to the establishment.

82.01 (K) ***Permit transfer.*** A permit may be transferred to a new Owner when there is a bona fide sale of the business, upon payment of a transfer fee as set forth by resolution of the City Commission. The transferred permit shall be subject to the conditions of the original approval.

CHAPTER 83. ALCOHOLIC BEVERAGES.

§ 83.01 EXEMPTIONS.

This Chapter shall not prohibit the sale of Alcoholic Beverages at a house of worship if such sale of Alcoholic Beverages is part of an authorized event sanctioned by the institution.

§ 83.02 LOCATION OF LICENSED PREMISES.

83.02 (A) ***Proximity of similar type of establishment.*** No license under State Law pertaining to the sale and dispensing of Liquor shall be issued to sell such Liquor for Consumption Off The Premises in any place of business located within 1,000 feet, by airline measurement, from main entrance to main entrance of the place of business of any similar type licensed purveyor of Liquor for Off-Site consumption, and must be separated from similar type licensed establishment by the 1,000-foot distance. No such license shall be issued during the period in which the existing license is renewable at such location; provided, however, that the Owner, by vested right of a license to do business within the prohibited area, may transfer his or her Liquor license to a new Owner doing business at the same location within the prohibited area. There shall be no distance requirement or restriction for:

83.02 (A)(1) Restaurants selling Alcoholic Beverages;

83.02 (A)(2) establishments selling Alcoholic Beverages for on premises consumption; or

83.02 (A)(3) establishments selling Alcoholic Beverages (beer and wine) as an ancillary part of the main business of such establishment (e.g., grocery stores, drugstores, Restaurants, etc.).

83.02 (B) ***Proximity of establishments to Child Care Facilities, houses of worship, and schools.*** No license under State Laws pertaining to the sale and dispensing of Alcoholic Beverages, including beer and wine, shall be issued to any Person or officers, employees, servants, or agents of any Person, firm, association, or corporation licensed by the State for the sale of Alcoholic Beverages at any location located within 1,000 feet by airline measurement from any established Child Care Facility, house of worship, or school, measured from the nearest public entrance. Whenever a license has been lawfully procured and thereafter a house of worship or school be established within a distance otherwise prohibited by Law, the establishment of a Child Care Facility, house of worship, or school shall not be cause for the revocation of the license or prevent the subsequent renewal of same. There shall be no distance requirement or restriction for Restaurants selling Alcoholic Beverages where the sale of said Alcoholic Beverages is incidental to its principal business as a Restaurant and where the sale of prepared food is the primary business of the Restaurant.

83.02 (C) ***Proximity of Child Care Facilities, houses of worship, and schools to existing establishments.*** It shall be unlawful for any Child Care Facility, house of worship, or school to operate at a location or in a Building within 1,000 feet by airline measurement from any established Child Care Facility, house of worship, or school, measured from the nearest public

entrance, provided that this Section shall not apply to such Child Care Facilities, houses of worship, or schools legally in existence and in operation upon passage of this Chapter.

83.02 (D) ***Number of establishments limited in certain districts.*** One, but not more than one, Package Store shall be permitted within a "planned employment center district" (PECD) or in a C-1 district. This limitation shall be without regard to its location in relation to other Uses as described in subsections (A) through (C) above.

§ 83.03 PROHIBITED ACTS.

83.03 (A) ***On Premises consumption.*** No vendor licensed under the State Laws pertaining to the sale and dispensing of Alcoholic Beverages, including beer and wine, who is not licensed to sell Liquor to be consumed upon the Premises, shall knowingly furnish or provide any setups, glasses, or other service to any Person for the purpose of consuming Liquor in, at, or upon the licensed Premises.

83.03 (B) ***Commission of an unlawful act.*** No vendor or distributor shall knowingly, directly or indirectly, commit or assist in the commission of any unlawful act upon any Premises licensed under the State Laws pertaining to the sale of Alcoholic Beverages, including beer and wine. Unless the City has issued a Special Event Permit expressly allowing the consumption of Alcoholic Beverages during the event, it shall be unlawful for any Person to consume any Alcoholic Beverage upon any area available for use by the public for Motor Vehicle parking purposes, or any public Street, Highway, or sidewalk, where such area adjoins or is adjacent or appurtenant to any establishment within the City where Alcoholic Beverages are sold or dispensed.

83.03 (C) ***Motor Vehicle parking areas.*** Unless the City has issued a Special Event Permit expressly allowing the consumption of Alcoholic Beverages during the event, it shall be unlawful for any Person or for the officers, employees, servants, or agents of any Person, firm, association, or corporation licensed by the State for the sale of Alcoholic Beverages for consumption either on or off the Premises to sell, serve, or dispense any Alcoholic Beverage to any Person, or knowingly permit the consumption of any Alcoholic Beverage by any Person, upon any Motor Vehicle parking area which is adjacent to or adjoining or appurtenant to any establishment within the City licensed for the sale of Alcoholic Beverages.

83.03 (D) ***License required.*** Unless the City has issued a Special Event Permit expressly allowing the consumption of Alcoholic Beverages during the event, it shall be unlawful for any Person to drink or consume Alcoholic Beverages, including Liquor, beer, or wines, on any public Streets, in any Public Parks, or in any other government owned or operated Public Place, unless such place is licensed by the City for the sale of Alcoholic Beverages.

§ 83.04 HOURS OF SALE.

83.04 (A) ***Consumption Off The Premises***. Any Person, or any Employee thereof, who sells or offers for sale in bottles, cans, or containers of any type any Liquor, beer, or wine, regardless of alcoholic content, for Consumption Off The Premises, is hereby prohibited from selling or offering for sale, for Consumption Off The Premises, said Liquor , beer, or wine, regardless of alcoholic content, on any day of the week between the hours of 1:00 a.m. and 7:00 a.m.

83.04 (B) ***Consumption On The Premises***. No vendor licenses under the provisions of the State Laws pertaining to the sale and dispensing of Alcoholic Beverages, including beer and wine, or any employee thereof, shall sell or offer for sale or deliver or serve or permit to be consumed on or upon the Premises of such vendor, any Liquors, beers, or wines, regardless of alcoholic content, on any day of the week between the hours of 1:00 a.m. and 7:00 a.m unless the vendor obtains an Extended Operating Hours with Alcoholic Beverages License under § 83.06 of this Code.

§ 83.05 BOTTLE CLUBS.

83.05 (A) ***License required.*** It is a violation of this Section, and a public nuisance, for any Person to operate a Bottle Club, or for such Person's agents, servants, or employees to be employed therein, unless an appropriate license has first been obtained from the City by the operator of said Bottle Club, said Bottle Club is an ancillary Use of an otherwise licensed business, and unless said license is displayed conspicuously at the place of business in such a manner as to be open to the view of the public and subject to the inspection of all duly authorized Officers of the City.

83.05 (B) ***Permitted hours.*** Bottle Clubs shall be open only during the hours permitted by Law or ordinance for establishments selling Alcoholic Beverages in the jurisdiction by which the Bottle Club is located. It is a violation of this Section, and a public nuisance, for any Person, his or her agents, servants, or employees, to open a Bottle Club at any other time or to permit a Bottle Club to remain open at any other time.

83.05 (C) ***Injunctions.*** The City may restrain violations of this Section and resulting public nuisances by temporary or permanent injunction, including a mandatory injunction, and such suit or action may be instituted and maintained in the name of the City without bond. Injunctive relief shall not preclude proceeding in a criminal action under this Section. A criminal action shall not preclude proceeding for injunctive relief.

83.05 (D) ***Inspections and searches.*** Licensees, by the acceptance of a Bottle Club license, agree and consent that their licensed business shall always be subject to inspection and search, without search warrant, by officers of the Broward County Sheriff's Department, during all hours that such Premises engage in business and at any other time such Premises are occupied by the licensee or other Persons.

§ 83.06 EXTENDED OPERATING HOURS WITH ALCOHOLIC BEVERAGE LICENSE.

83.06 (A) ***Application.*** Any Person or vendor or any place of business operating in the City, and duly and regularly licensed by this State to sell and dispense Alcoholic Beverages, wine or beer for consumption on Premises therein, may apply for an Extended Operating Hours with Alcoholic Beverage License. Such license application shall be processed using the same procedures as for a variance (including cost recovery deposit), but using the criteria listed in subsection (B) below. The fee for the issuance or renewal of said license shall be set and amended by resolution of the City Commission. Such Extended Operating Hours with Alcoholic Beverage License shall permit and extend the hours in which such licensee may stay open and sell Alcoholic Beverages for Consumption On The Premises until not later than 3:00 a.m. (or such earlier time as

specifically authorized by resolution of the City Commission). Every such license shall expire on September 30 of each and every Year. The fee for the issuance or renewal of said license shall be paid within 30 days of the initial approval or any renewal date. Failure to timely pay the fee shall result in the immediate and automatic revocation of the approval or license.

83.06 (B) ***Criteria.*** The specific criteria for the City Commission's consideration are as follows:

83.06 (B)(1) The amount of off-street parking in relation to the demands created by the extra hours of operation, especially with regard to the adverse impact on adjacent Residential Areas of any illegal or hazardous parking.

83.06 (B)(2) The amount and degree of law enforcement activities generated by the operation of the establishment, both outside and inside the particular location, with particular emphasis on the vandalism, noise, vehicular use by patrons and illegal activity of any kind by employees, patrons or others associated with the establishment.

83.06 (B)(3) The adverse effects if any, that the extended hours of operation will have on neighboring properties, especially with respect to the effects of noise, parking and glare from headlights or Exterior Lighting on nearby residential properties.

83.06 (C) ***Conditions.*** The City Commission may require, as a condition of the privilege of extending hours of operation, compliance with any reasonable conditions deemed by it to be necessary to mitigate or eliminate the adverse effects of such extended hours. These conditions may include, without being limited to, provision by the Owner or operator, at his/her expense, additional off-street parking, security personnel and screening and buffering from nearby properties.

83.06 (D) ***Renewal.*** The granting of an Extended Operating Hours with Alcoholic Beverage License to a particular licensee is a privilege subject to revocation at any time by the City Commission, and no Person may reasonably rely on a continuation of that privilege. In the absence of ongoing revocation proceedings, an Extended Operating Hours with Alcoholic Beverage License may be renewed annually upon payment of the aforementioned fee prior to October 1 of each Year.

83.06 (E) ***Revocation.*** If, at any time, the City Manager determines that any licensee has either violated a condition of granting of the license or is operating in a manner harmful to the public health, safety or welfare based upon the criteria specified in subsection (B), he or she may place on the City Commission agenda the matter of revoking the Extended Operating Hours with Alcoholic Beverage License. Such hearing shall be publicly advertised in a newspaper of local circulation; and further, written notice of the charges against the licensee shall be sent to him at least 14 days in advance and shall also contain the date, time and place of such hearing. After consideration of the matter and allowing the licensee to be heard, the City Commission may revoke, modify or condition the Extended Operating Hours with Alcoholic Beverage License. The criteria to be used by the City Commission in such matters shall be the criteria specified in subsections (B) and (C) above. Should the license or privilege be revoked, conditioned or modified, the licensee may seek review of such action before the City Commission after six

months. The City Commission may then modify or refuse to modify its action. Only one such review shall be given within a 12-month period.

83.06 (F) ***Conspicuously displayed.*** The license shall be conspicuously displayed within ten feet of the main entrance to the establishment.

83.06 (G) ***License transfer.*** A license may be transferred to a new Owner when there is a bona fide sale of the business, upon payment of a transfer fee as set forth by resolution of the City Commission. The transferred license shall be subject to the conditions of the original approval.

§ 83.07 COUNTRY CLUB, RESTAURANT AND HOTEL BARS.

The sale of beers, wines, and Liquors shall be prohibited except during the time that the country club, Restaurant or Hotel is actually engaged in and open to the public for operation. No Sign denoting that Alcoholic Beverages are obtainable within the country club, Restaurant or Hotel shall be exhibited on the exterior of the Premises.

CHAPTER 84. OUTDOOR SEATING OR BAR AREAS.

§ 84.01 OUTDOOR SEATING OR BAR AREAS.

84.01 (A) ***Intent.*** It is the intent of this Section to require any business with Outdoor seating or Bar Areas to obtain a separate license in order to maintain the privilege of such Outdoor seating or Bar Areas and to establish minimum criteria for any Outdoor seating or Bar Areas within the City.

84.01 (B) ***Generally.*** No Outdoor seating or Bar Areas shall be allowed in the City except in compliance with this Section.

84.01 (C) ***License requirement.***

84.01 (C)(1) Any business having an Outdoor seating or Bar Areas must receive and prominently post an Outdoor seating/Bar license to be issued by the City.

84.01 (C)(2) The license issued hereunder shall designate the number and type(s) of tables and seats permitted and the total square footage in the Outdoor seating or Bar Areas.

84.01 (C)(3) The license may be granted with conditions or restrictions found necessary to ensure compatibility with surrounding properties, and to protect the health, safety and welfare of the public, including without limitation a restriction as to the time of day of any use of the Outdoor seating or Bar Area.

84.01 (C)(4) Once issued, the license shall be valid until September 30. Thereafter, the license must be renewed annually.

84.01 (C)(5) Nothing contained in this Section shall be construed to create any right to the issuance or renewal of an Outdoor seating/Bar license. The City may rescind the license if the requirements of this Section are violated.

84.01 (C)(6) The fees for Outdoor seating or Bar applications and licenses shall be established and amended by resolution of the City Commission.

84.01 (C)(7) The license shall be conspicuously displayed in the window area nearest to the Outdoor seating area.

84.01 (D) ***Site plan applicability.*** Any Outdoor seating or Bar Area that is not shown on a previously approved site plan, or is relocated or modified in any way, requires an amendment to the site plan. Modifications requiring new site plan approval include, but are not limited to, any increase in the number of tables, seats or area occupied in an Outdoor seating or Bar Area. The Applicant for the amendment to the site plan shall be the Owner of the property.

84.01 (E) ***Standards.*** All Outdoor seating or Bar Areas shall be subject to the following requirements:

84.01 (E)(1) Outdoor seating or Bar Areas shall be located on Private Property; and

84.01 (E)(2) Outdoor seating or Bar Areas shall be for the service of food and beverages only; and

84.01 (E)(3) Outdoor seating or Bar Areas shall not impede pedestrian or vehicle movement, nor impede pedestrian ingress and egress from any adjacent structure; and

84.01 (E)(4) Outdoor seating or Bar Areas must be supported by adequate parking and shall be used and constructed in compliance with all other applicable regulations within this Code of Ordinances; and

84.01 (E)(5) Outdoor Bar Area without seating shall not exceed an occupancy of 1 patron per 7 square feet of area not occupied by tables and chairs. Outdoor Bars with seats shall have no more than one seat per 24 lineal inches of Bar, excluding any service area; and

84.01 (E)(6) The maximum occupancy of Outdoor seating areas shall not exceed:

84.01 (E) (6)(a) Bistro Tables: 1 patron per 9 square feet of area occupied by tables and chairs, and 1 table per 36 square feet of area occupied by tables and chairs.

84.01 (E)(6)(b) Dining Tables: 1 patron per 12.5 square feet of area occupied by tables and chairs, and 1 table per 50 square feet of area occupied by tables and chairs.

84.01 (F) ***Previously approved Outdoor seating or Bar Areas.*** Any business that has a site plan showing an Outdoor seating or Bar Area, approved prior to June 1, 2001, shall be entitled to a license for the Outdoor area shown on the approved site plan. The number of chairs and tables allowed shall be as follows:

84.01 (F)(1) Bistro Tables: 1 chair per 9 square feet of area occupied by tables and chairs, and 1 table per 36 square feet of area occupied by tables and chairs.

84.01 (F)(2) Dining Tables: 1 chair per 12.5 square feet of area occupied by tables and chairs, and 1 table per 50 square feet of area occupied by tables and chairs.

84.01 (G) ***Fee.*** No application fee shall be required for such licenses.

84.01 (H) ***Transferability.*** A license may be transferred to a new Owner when there is a bona fide sale of the business, upon payment of a transfer fee as set forth by resolution of the City Commission. The transferred license shall be subject to the conditions of the original approval.

CHAPTER 85. CONVENIENCE BUSINESSES.

§ 85.01 CONVENIENCE BUSINESSES.

85.01 (A) Every Convenience Business shall be equipped with the following security devices and standards:

85.01 (A)(1) A security camera system capable of recording and retrieving an image to assist in offender identification and apprehension.

85.01 (A)(2) A drop safe or cash management device for restricted access to cash receipts.

85.01 (A)(3) A lighted parking lot illuminated at an intensity of at least two foot-candles per square foot at 18 inches above the surface.

85.01 (A)(4) A conspicuous notice at the entrance which states that the cash register contains $50 or less.

85.01 (A)(5) Window Signage that allows a clear and unobstructed view from outside the Building and in a normal line of sight of the cash register and sales transaction area.

85.01 (A)(6) Height markers at the entrance of the Convenience Business which display height measures.

85.01 (A)(7) A cash management policy to limit the cash on hand at all times after 11:00 p.m.

85.01 (B) A Convenience Business shall not have window tinting that reduces exterior or interior view in a normal line of sight.

85.01 (C) Every Convenience Business shall be equipped with a silent alarm to law enforcement or a private security agency, unless application for an exemption is made to and granted by the Attorney General. An application for exemption must be in writing and must be accompanied by an administrative fee of $25 for each store for which an exemption would apply.

85.01 (D) If a murder, robbery, sexual battery, aggravated assault, aggravated battery, or kidnapping or false imprisonment, as those crimes are identified and defined by Florida Statutes, occurs or has occurred at a Convenience Business since July 1, 1989, and arises out of the operation of the Convenience Business, that Convenience Business shall implement at least one of the following security measures:

85.01 (D)(1) Provide at least two employees on the Premises at all times after 11:00 p.m. and before 5:00 a.m.

85.01 (D)(2) Install for use by employees at all times after 11:00 p.m. and before 5:00 a.m. a secured safety enclosure of transparent polycarbonate or other material that meets at least one of the following minimum standards:

85.01 (D)(2)(a)American Society for Testing and Materials Standard D3 93 5 (classification PC 110 B 3 0800700) and that has a thickness of at least 0.375 inches and has an impact strength of at least 200 foot pounds; or

85.01 (D)(2)(b) Underwriters Laboratory Standard UL 752 for medium power small arms (level one), Bullet Resisting Equipment.

85.01 (D)(3) Provide a security guard on the Premises at all times after 11:00 p.m. and before 5:00 a.m.

85.01 (D)(4) Lock the business Premises throughout the hours of 11:00 p.m. to 5:00 a.m. and only transact business through an indirect pass-through trough, trap door, or window.

85.01 (D)(5) Close the business at all times after 11:00 p.m. and before 5:00 a.m.

85.01 (E) For purposes of this Section, any Convenience Business that by Law implemented any of the security measures set forth in subsection (D) and has maintained said measures as required by the Department of Legal Affairs without any occurrence or incidence of the crimes identified by subsection (D) for a period of no less than 24 months immediately preceding the filing of a notice of exemption, may file with the Department a notice of exemption from these enhanced security measures. In no event shall this exemption be interpreted to preclude full compliance with the security measures set forth in subsection (D) should any occurrence or incidence of the crimes identified by subsection (D) cause subsection (D) to be applicable.

85.01 (F) All materials and methods of construction used shall conform to the requirements of the Building Code and be reviewed by the Building Department prior to issuance of the Building Permit.

CHAPTER 86. ADULT BUSINESSES.

PART 1: GENERAL PROVISIONS

§ 86.01 LOCATION OF ADULT BUSINESSES.

86.01 (A) ***Adult Entertainment Establishments; findings and purpose.*** In the development, enforcement, and amendment of this Section, it is recognized that there are uses and Accessory Uses which because of their very nature are recognized as having serious objectionable characteristics particularly when several of them are concentrated in any given location, thereby having a deleterious effect upon the adjacent business and Residential Areas. Further, it is recognized that the location of even one such use near a Residential Area or other incompatible use causes such deleterious effects on the neighborhood and on the businesses that serve the neighborhood. Special regulation of these uses is necessary to ensure that these adverse effects will not contribute to the blighting and downgrading of the surrounding neighborhood.

86.01 (B) ***Distance limitations between Adult Entertainment Establishments.***

86.01 (B)(1) None of the Adult Entertainment Establishments set forth in this Section, or added from time to time to this Section by amendment, shall be located or operated nearer to the same or any other Adult Entertainment Establishment nor nearer to any such church or public, private, or parochial kindergarten, nursery, elementary, middle, or high school, day care center, hospital, Building owned and/or partly or wholly occupied by a government agency, library, or post office than 1,000 feet. Measurement of the 1,000 feet shall be made in accordance with subsection (3) below. Where an Adult Entertainment Establishment is located in conformity with the provisions of this Chapter, the subsequent locating of one of the Uses provide above within 1,000 feet of an existing Adult Entertainment Establishment shall not cause a violation of this Section.

86.01 (B)(2) None of the Adult Entertainment Establishments set forth in this Section, or added from time to time to this Section by amendment, shall be located or operated nearer than 500 feet to a residentially zoned district. Measurement of the 500 feet shall be made in accordance with subsection (3) below. Where an Adult Entertainment Establishment is located in conformity with the provisions of this Chapter, the subsequent locating of a residentially zoned district within 500 feet of an existing Adult Entertainment Establishment shall not cause a violation of this Section.

86.01 (B)(3) For the purposes of this Section, all measurements of distances shall be along a straight airline route from the nearest point on the property line of any property or Use that is an Adult Entertainment Establishment under this Chapter. If the property is one of multiple, separate but attached bays designed for separate businesses, the property line of the parcel that contains the multiple-bay structure shall be considered the property line for purposes of this measurement. Therefore, no more than one Adult Entertainment Establishment may be located in any one Structure, even if that Structure contains multiple, separate but attached bays designed for separate businesses. To determine the distances regulated by this Section, the Person seeking to establish or operate an Adult Entertainment Establishment shall furnish to the City a survey sealed by a Professional Surveyor and Mapper who is licensed by the State of Florida. The survey shall indicate the distance between the proposed Adult Entertainment Establishment and any other Adult Entertainment Establishment, church, school, hospital, Building owned and/or partly or wholly

occupied by government agency, library, or post office as described in subsections (1) and (2) above.

86.01 (B)(4) Variances to the location standards of this Section shall not be permitted.

86.01 (C) ***Adult Entertainment Establishment Uses.*** The following uses are declared to be "Adult Entertainment Establishments:"

86.01 (C)(1) Adult Bookstore/Adult Novelty Store/Adult Video Store;

86.01 (C)(2) Adult Dancing Establishment;

86.01 (C)(3) Adult Domination/Submission Parlor;

86.01 (C)(4) Adult Motel;

86.01 (C)(5) Adult Motion Picture Theater;

86.01 (C)(6) Encounter Studio/modeling studio;

86.01 (C)(7) Massage establishment; and

86.01 (C)(8) Any bookstore, video store, motion picture theater, Motel/Hotel, dancing establishment, massage establishment, or photo or modeling studio: (a) that includes the word "adult" in its name; or (b) where an Employee, Operator, or Owner exposes his or her Specified Anatomical Area for viewing by patrons; or (c) which exposes material to minors that may not be exposed to minors under Chapter 847, Florida Statutes, shall be considered an Adult Entertainment Establishment.

§ 86.10 FINDINGS.

Based on the evidence and testimony presented before the City Commission and on the findings incorporated in the "Secondary Effects of Sexually-Oriented Business on Market Values", Texas City Attorneys Association (June 2008); "Crime-Related Secondary Effects: Secondary Effects of 'Off-Site Sexually-Oriented Businesses'" Texas City Attorneys Association (June 2008) "A Report on the Secondary Impacts of Adult Use Businesses in the City of Denver," by the Zoning Administration, Office of Planning and Development, Department of Public Safety, Department of Excise and Licenses, Assessor's Office, and in consultation with the City's Attorney's Office, Denver, Colorado (January 1998); "Sexually Oriented Business Ordinance Revision Committee Legislative Report," Houston, Texas (January 7, 1997); "Crime Related Secondary Effects of "Adult Use Study," by the Newport News Department of Planning and Development, Newport News, Virginia (March 1996); "Report to American Center for Law and Justice on the Secondary Impacts of Sex Oriented Businesses," by Peter R. Hecht, Ph.D. of the Environmental Research Group (March 31, 1996); The "Adams County Nude Entertainment Study" by the Adam's County Sheriff's Department (1991) (Colorado); "Effects of Adult Entertainment Businesses on Residential Neighborhoods," by the Department of Planning, Research, and Development, City of El Paso, TX (Sept. 26, 1986); "Adult Entertainment Business Study for Manatee County, Florida," by Manatee

County Planning and Development Department (June 1987); Adult Entertainment Businesses in Oklahoma City: A Survey of Real Estate Appraisers," by the Community Development Department of the City of Oklahoma City, OK (March 3, 1986); and Transcript of Workshop Meeting of City Council, City of Tampa, Florida, regarding "Draft Proposal of Establishing a Locational Criteria for Adult Bookstores, Adult Theatres and Special Cabarets" (July 1, 1982), the City Commission hereby finds as follows:

86.10 (A) Establishments exist or may exist within the City where books, magazines, motion pictures, videos, prints, photographs, periodicals, records, novelties, and devices that depict, illustrate, describe, or relate to Specified Sexual Activities are possessed, displayed, exhibited, distributed, and/or sold.

86.10 (B) Establishments exist or may exist within the City where:

86.10 (B)(1) The superficial tissues of one Person are manipulated, rubbed, stroked, kneaded, or tapped by a second Person, accompanied by the display or exposure of Specified Anatomical Areas;

86.10 (B)(2) Dancers, entertainers, performers, or other individuals, who, for forms of Commercial Gain, perform or are presented while displaying or exposing Specified Anatomical Areas; or

86.10 (B)(3) Lap Dancing occurs.

86.10 (C) The activities described in (A) and (B) occur at Establishments for the purpose of making a profit, and, as such, are subject to regulation by the City in the interest of the health, safety, and general welfare of its residents.

86.10 (D) The competitive commercial exploitation of such nudity and semi-nudity is adverse to the public's interest, quality of life, tone of commerce, and total community Environment.

86.10 (E) The commercial exploitation of nudity and semi-nudity consists of the use of nude and semi-nude entertainment in connection with or for the promotion of the sale of goods or services, and the receipt of money by the Person engaging in nude or semi-nude entertainment in exchange for or as consideration for nude or semi-nude performance by such individuals.

86.10 (F) The commercial exploitation of nude and semi-nude acts, exhibitions, and nude entertainment occurs frequently at Commercial Establishments either selling or allowing consumption of Alcoholic Beverages on the Premises.

86.10 (G) There is a direct relationship between the consumption of Alcoholic Beverages and the nude and semi-nude activities mentioned above, and an increase in criminal activities, disturbances of the peace and good order of the community. The occurrence of these activities is hazardous to the health and the safety of those Persons in attendance and tends to depreciate the value of adjoining property and harm the economic welfare of the community as a whole.

86.10 (H) The combination of the sale and consumption of Alcoholic Beverages with the performance of nude and semi-nude acts, exhibitions and entertainment is adverse to the public's interest and the quality of life, tone of commerce, and total community Environment in the City.

86.10 (I) To promote and preserve the public peace and good order and to safeguard the health, safety, and welfare of the community and the citizens thereof, it is necessary and advisable for the City to prohibit certain forms of nude and semi-nude acts, exhibitions, entertainment, and Commercial Establishments at which Alcoholic Beverages are, or are available to be, sold or consumed.

86.10 (J) To preserve the public peace and good order, and to safeguard the health, safety, and welfare of the community and residents thereof, it is necessary and advisable to regulate and restrict the conduct of Owners, Operators, agents, Employees, entertainers, performers, patrons, spectators, and Persons on the Premises of the Commercial Establishment subject hereto.

86.10 (K) There is a direct relationship between the display or depiction of Specified Anatomical Areas as defined herein and an increase in criminal activities, and disturbances of the peace and good order of the community, and the occurrence of these activities is hazardous to the health and safety of those Persons in attendance and tends to depreciate the value of adjoining property and harm the economic welfare of the community as a whole. These secondary effects are adverse to the public's interest and quality of life, tone of commerce, and total community Environment in the City.

86.10 (L) When the activities described in (A) and (B) take place in Establishments within the City, other activities that are illegal or unhealthy tend to accompany them, concentrate around them, and be aggravated by them. Such other activities include but are not limited to prostitution, solicitation for prostitution, lewd and lascivious behavior, possession, distribution and transportation of obscene materials, sale or possession of controlled substances, and violent crimes against Persons and property.

86.10 (M) When the activities described in (A) and (B) are present in Establishments within the City, they tend to blight neighborhoods, adversely affect neighboring Businesses, lower property values, foster an atmosphere that promotes crime, and ultimately lead residents and businesses to move to other locations.

86.10 (N) Physical contact within Establishments at which the activities described in (A) and (B) occur between Employees exhibiting Specified Anatomical Areas unless and Customers poses a threat to the health of both and may lead to the spread of communicable, infectious, and social diseases.

86.10 (O) To preserve and safeguard the health, safety, and general welfare of the people of the City, it is necessary and advisable for the City to regulate the conduct of Owners, managers, Operators, agents, Employees, entertainers, performers, and customers at Establishments where the activities described in (A) and (B) occur.

86.10 (P) The potential dangers to the health, safety, and general welfare of the residents of the City from the activities described in (A) and (B) occurring at Establishments without

first obtaining a license under this subchapter are so great as to require the licensure of such Establishments before they are permitted to operate.

86.10 (Q) "Lap Dancing" does not contain an element of communication, and is therefore conduct rather than expression.

86.10 (R) "Lap Dancing" in Establishments poses a threat to the health of the participants and promotes the spread of communicable, infectious, and social diseases.

86.10 (S) Sexually oriented businesses are frequently used for unlawful and unhealthy sexual activities, including prostitution and sexual liaison of a casual nature.

86.10 (T) The concern over sexually transmitted diseases is a legitimate health concern of the City that demands reasonable regulation of sexually oriented businesses in order to protect the health and well-being of the citizens.

86.10 (U) The prevention of sexual contact between patrons and Employees at Adult Dancing Establishments is unrelated to the suppression of free expression but serves to address the concerns raised in the findings contained herein. Although the dancer's erotic message may be slightly less effective from four feet away, the ability to engage in the protected expression is not significantly impaired.

86.10 (V) Separating dancers from patrons and prohibiting dancers and patrons from engaging in sexual fondling and caressing in Adult Dancing Establishments would reduce the opportunity for prostitution transactions and thus should deter prostitution.

86.10 (W) To preserve and safeguard the health, safety, and general welfare of the people of the City, it is necessary and advisable for the City to obtain sufficient information regarding the Owners of Establishments where the activities described in (A) and (B) occur in order to preclude the involvement of organized crime.

86.10 (X) Requiring sufficient lighting in Adult Theaters advances the substantial governmental interest in curbing the illegal and unsanitary sexual activity occurring at Adult Theaters.

86.10 (Y) Requiring that the facilities of Adult Theaters be constructed of materials that are easily cleanable, that the facilities be cleaned on a regular basis, and that the Employees cleaning the facilities take reasonable precautions to avoid contact with possible disease transmitting media is reasonably related to the protection of both Employees and patrons from sexually transmitted diseases.

86.10 (Z) Licensing is a legitimate, reasonable means of accountability to ensure that Operators of sexually oriented businesses comply with the reasonable regulations within this subchapter and the location requirements of the zoning code, and to ensure that Operators do not knowingly allow their Establishments to be used as places of illegal sexual activity or solicitation.

§ 86.11 PURPOSE.

It is the intent of the City Commission in enacting this subchapter to establish reasonable and uniform regulations that will reduce the adverse secondary effects Adult Entertainment Establishments have upon the residents of the City and to protect the health, safety, and general welfare of the people. A mother's breast feeding of her baby does not under any circumstances violate any provision of this subchapter.

§ 86.12 MASSAGE ESTABLISHMENTS.

It is not the intent of the commission to legislate, limit, or conflict with respect to matters of massage establishments that are regulated by State agency, the Department of Professional Regulation, Board of Massage, and by general Law, Florida Statutes Chapter 480.

PART 2: LICENSING

§ 86.30 ZONING APPROVAL REQUIRED.

No application for a license as provided in this part shall be approved until the appropriate provisions of the Zoning Chapter have been complied with, the required zoning approval obtained, and the respective zoning official notifies the City of compliance.

§ 86.31 LICENSE GENERALLY.

86.31 (A) No Adult Entertainment Establishment shall be allowed to operate without first having been issued an Adult Entertainment license by the City pursuant to this subchapter.

86.31 (B) Adult Entertainment licenses referred to in this subchapter shall be licenses limited to the following classifications:

86.31 (B)(1) Adult Bookstore/Adult Novelty Store/Adult Video Store;

86.31 (B)(2) Adult Dancing Establishment;

86.31 (B)(3) Adult Domination/Submission Parlor;

86.31 (B)(4) Adult Motion Picture Theater/Adult Motel;

86.31 (B)(5) Encounter Studio/modeling studio;

86.31 (B)(6) Massage establishment; and

86.31 (B)(7) Any other Adult Entertainment Establishment as defined in this Chapter and not otherwise prohibited.

86.31 (C) An Adult Entertainment license for a particular Adult Entertainment Establishment shall be limited to one classification of license.

86.31 (D) An Adult Entertainment Establishment may hold more than one classification of Adult Entertainment license.

§ 86.32 LICENSE APPLICATION; FEE.

86.32 (A) ***Filing.*** A Person desiring to operate an Adult Entertainment Establishment shall file with the City a sworn license application on a standard application form supplied by the City.

86.32 (B) ***Contents.*** The application shall contain the following information and shall be accompanied by the following documents:

86.32 (B)(1) If the Applicant is:

86.32 (B)(1)(a) An individual, his or her legal name, aliases, and date of birth, driver's license number or a state or federally issued identification card number;

86.32 (B)(1)(b) A partnership, the full and complete name of the partners, dates of birth, driver's license numbers or state or federally issued identification card numbers of all partners, and all aliases used by all of the partners, whether the partnership is general or limited, and, if in existence, a copy of the partnership agreement; or

86.32 (B)(1)(c) A corporation, the exact and complete corporate name, the date of its incorporation, evidence that the corporation is in good standing, the legal names and dates of birth, driver's license numbers or state or federally issued identification card numbers of all officers, directors and Principal Stockholders, and all aliases used, the capacity of all officers, directors, and Principal Stockholders, and, if applicable, the name of the registered corporate agent, and the address of the registered office for service of process.

86.32 (B)(2) The application shall list the current local and legal domiciliary residential addresses of the Principal Stockholders of the corporation; for purposes of this subsection, Principal Stockholders are natural Persons and not corporate or other legal entities; when the Principal Stockholders is a corporate or other legal entity, the application must trace back the ownership through layers of corporate organization to the eventual Principal Stockholder who is a natural Person.

86.32 (B)(3) If the Applicant intends to conduct business under a name other than that of the Applicant, the Applicant shall state the Establishment's fictitious name and the county of registration under Florida Statutes § 865.09, all legal names, dates of birth, addresses and all aliases used by all Interested Persons.

86.32 (B)(4) Whether the Applicant, or other individuals listed pursuant to (1) above, has within the five-year period immediately preceding the date of the application, ever been

convicted of a Specified Criminal Act and, if so, the Specified Criminal Act involved, the date of conviction, and the place of conviction.

86.32 (B)(5)(a) Whether the Applicant, or other individuals listed pursuant to (1) above, has had a previous license issued under this Code suspended or revoked, or by court order, been required to cease operation, including the name and location of the Establishment for which the license was suspended or revoked, as well as the date of the suspension or revocation; and

86.32 (B)(5)(b) Whether the Applicant , or any other individuals listed pursuant to (B) above, has been a partner in a partnership or an officer, director or Principal Stockholders of a corporation whose license issued under this Code has previously been suspended or revoked, including the name and location of the Establishment for which the license was suspended or revoked, as well as the date of the suspension or revocation.

86.32 (B)(6) Whether the Applicant, or other individuals listed pursuant to paragraph (1) above, holds other licenses under this Code and, if so, the names and locations of such other licensed Establishments.

86.32 (B)(7) The single classification of license for which the Applicant is filing and the general nature of adult Use for which the Applicant is seeking a license, including a statement concerning the degree to which the anticipated activities at the Adult Entertainment Establishment meet the enumerated adult use classifications set forth within this Chapter; such a characterization shall serve as an initial basis for the permitted activities allowed under the license issued as well as a basis for the fee charged.

86.32 (B)(8) The location of the proposed Establishment, including a legal description of the property site, and a legal Street address.

86.32 (B)(9) The names of all Employees, dates of birth, and aliases used for the proposed Establishment, if known, or, if currently unknown, a statement to that effect.

86.32 (B)(10) The Applicant's mailing address, residential address and residential telephone number (if any).

86.32 (B)(11) A sealed survey drawn to appropriate scale of the proposed Establishment showing all property lines, Rights-Of-Way, and the location of Buildings, parking areas and spaces, curb cuts, driveways, and compliance with the distance and location requirements of the Code.

86.32 (B)(12) A floor plan drawn to appropriate scale of the proposed Establishment indicating, but not limited to:

86.32 (B)(12)(a) All windows, all doors, all entrances and exits.

86.32 (B)(12)(b) Proposed seating arrangement.

86.32 (B)(12)(c) All fixed structural interior features, including but not limited to doors, aisles, walls, stages, partitions, stands, counters, platforms, and similar Structures.

86.32 (B)(12)(d) All proposed improvements or enlargements to be made, which shall be indicated and calculated in terms of percentage of increase in floor size.

86.32 (B)(13) A copy of the application for the zoning certificate of use.

86.32 (B)(14) The name, address and phone number of the Person whom the Building and permitting division should contact to schedule the inspection.

86.32 (B)(15) The phone number and address of the existing or proposed Establishment.

86.32 (B)(16) The name, phone number and address of the manager.

86.32 (B)(17) A notarized, signed, and sworn statement that the information within the application is truthful, independently verifiable, and complete and that the photocopies of the attached driver's licenses or state or federally issued identification cards are true and correct copies of the originals.

86.32 (C) ***Copies.***

86.32 (C)(1) In addition to the requirement of (B) above, the Applicant shall supply a minimum of five copies of the application, or more as may be required, to the City.

86.32 (C)(2) An application shall not be considered complete until the application satisfies the requirements of (B) and (C)(1) above.

86.32 (D) ***Application fee.*** Each application shall be accompanied by a nonrefundable fee to be set by resolution of the City Commission to defray the costs of processing and investigation of the application. If the application for a license is approved and a license is granted, half of the application fee shall be applied as a credit towards the annual license fee required for the first year pursuant to § 86.35(F).

86.32 (E) ***Rejection of application.*** In the event the City determines that the Applicant has not satisfied the application requirements for a proposed Establishment, the Applicant shall be notified of such fact within the time frame specified herein with a detailed list of reasons; and the application shall be denied.

§ 86.33 LICENSE APPLICATION PROCEDURE.

Upon receipt of an application filed properly with the City and upon payment of the nonrefundable application fee, the City shall promptly conduct an investigation of the Applicant and the proposed Establishment. At the conclusion of the investigation, the City Commission shall either approve or deny the application. The City Commission shall deny an application if it finds that the proposed Establishment will be in violation of a provision of this Chapter or of any Building, fire, or zoning code, statute, ordinance, or regulation. If the application fails to satisfy this

Code or any Building, fire or zoning code, statute, ordinance, or regulation, the City Commission shall state specifically its reasons within its resolution of denial.

§ 86.34 APPLICATION REVIEW AND ISSUANCE OF LICENSE.

86.34 (A) The City Manager shall conduct and complete an investigation of the application and present the findings to the City Commission within 30 days after the City deems the application to be complete. The City Commission shall either approve or deny the application.

If the Applicant has satisfied the requirements of this Code, the City shall notify the Applicant and issue the license to the Applicant upon payment of the appropriate annual license fee provided in § 86.35 (F), with credit as provided in § 86.32 (D).

86.34 (B) The City shall deny the application if:

86.34 (B)(1) The application violates or fails to meet the provisions of this Code, any Building, fire or zoning code, statute, ordinance, or regulation;

86.34 (B)(2) The application contains material false information, or information material to the decision was omitted; failure to list an individual required to be listed, and whose listing would result in a denial, is presumed to be material false information for purposes of denial of the application; the certification that the licensee owns, possesses, operates and exercises control over the proposed or existing Adult Use Establishment is a material representation for purposes of this Section;

86.34 (B)(3) The Applicant, or other individuals listed pursuant to § 86.37, has a license under this Code, or has had a license under this Code which has been suspended or revoked;

86.34 (B)(4) The granting of the application would violate a statute or ordinance, or an order from a court of law that prohibits effectively the Applicant from obtaining an Adult Entertainment license; or

86.34 (B)(5) An Applicant, or any other individual required to be listed, has been convicted of a Specified Criminal Act:

86.34 (B)(5)(a) For which:

86.34 (B)(5)(a)1. Less than two Years has elapsed since the date of conviction or the date of release from confinement imposed for the conviction, whichever is the later date, if the conviction is of a misdemeanor offense; or

86.34 (B)(5)(a)2. Less than five Years has elapsed since the date of conviction or the date of release from confinement imposed for the conviction, whichever is the later date, if the conviction is of a felony offense; or

86.34 (B)(5)(a)3. Less than five Years has elapsed since the date of conviction or the date of release from confinement imposed for the conviction, whichever is the later date, if the convictions are of two or more misdemeanor offenses or a combination of misdemeanor offenses occurring within any 24-month period.

86.34 (B)(5)(b) The fact that a conviction is being appealed shall have no effect on the disqualification of the Applicant.

86.34 (B)(5)(c) An Applicant who has been convicted of a Specified Criminal Act may qualify for an Adult Entertainment Establishment license only when the time period set forth above has elapsed or if his or her civil rights have been restored.

86.34 (C) If a Person applies for a license at a particular location within a period of one Year from the date of denial of a previous application for a license at the location, and there has not been an intervening change in the circumstances material to the decision regarding the former reason(s) for denial, the application shall not be accepted for consideration.

§ 86.35 LICENSE FORM, TERM, AND RENEWAL.

86.35 (A) ***Contents.*** An Adult Entertainment license shall state on its face the name of the licensee, the business name, local residential and legal domiciliary residential address of the licensee, the name of the Establishment, the Street address of the Establishment, the classification of the license, a 24-hour working phone number, the date of issuance, and the date of expiration.

86.35 (B) ***Term.*** All licenses issued under this subchapter shall be annual licenses that shall commence running on October 1, on which date they shall have been paid for, and shall expire on September 30 of the following year. If a license is issued after October 1, but prior to March 31 of the following year, the Applicant shall pay the prorated license fee. If a license is issued after March 31, but prior to October 1 of the same year, the Applicant shall pay one-half the appropriate license fee.

86.35 (C) ***Renewal.*** Licenses shall be entitled to renewal annually subject to the provisions of this subchapter. Before the October 1 expiration date, the annual license may be renewed by presenting the license for the previous year, by paying the appropriate license fee, and by updating the information supplied with the latest application or certifying that the information supplied previously remains unchanged.

86.35 (D) ***Expiration.*** A license shall expire for failure to obtain a renewal pursuant to this subchapter by September 30. An expired license may be renewed no later than November 30 of the same year upon:

86.35 (D)(1) The submission of an affidavit stating that the Establishment has not been operated as an Adult Entertainment Establishment from the date of expiration of the license;

86.35 (D)(2) The payment of the appropriate license fee; and

86.35 (D)(3) Payment of a penalty of 10% of the appropriate license fee for the month of October and if renewed after October 31, an additional penalty of 5% of the appropriate license fee for the month of November.

86.35 (E) ***Cancellation.*** All licenses not renewed by November 30 shall be deemed expired and unavailable for renewal by the City unless such license is involved in litigation. The Applicant may reapply for an Adult Entertainment license. Upon the payment of the application fee, satisfaction of the application requirements, and payment of the license fee, operation of the Adult Entertainment Establishment may continue.

86.35 (F) ***Annual license fees.*** The annual license fees under this subchapter for an Adult Entertainment Establishment shall be set by resolution of the Commission.

86.35 (G) ***Collection of fees.*** The City shall be responsible for the collection of the application and annual license fees pursuant to this subchapter.

§ 86.36 LICENSE TRANSFERABILITY.

86.36 (A) A licensee shall not transfer his or her license to another Person, or thereby surrender possession, control, or operation of the licensed Establishment to such other Person.

86.36 (B) A licensee shall not transfer his or her license to another location.

86.36 (C) An attempted transfer of a license either directly or indirectly in violation of this Section is hereby declared void, and in that event the license shall be deemed abandoned, and the license shall be forfeited.

§ 86.37 LICENSE SUSPENSION AND REVOCATION.

86.37 (A) ***Suspension.***

86.37 (A)(1) ***Violation of regulations.*** In the event a licensed Adult Entertainment Establishment is operating in violation of a Building, fire, or zoning code, statute, ordinance, or regulation, whether federal, State, or local, or the respective requirements of § 86.50 *et seq.*, the City shall notify the licensee of the violation. The licensee shall have ten business days in which to correct the violation. If the licensee fails to correct the violation within ten business days, the City shall schedule a hearing before the Special Magistrate. If the Special Magistrate determines that a licensed Establishment is in violation of a Building, fire, or zoning statute, code, ordinance, or regulation, whether federal, State, or local, or the respective general requirements of § 86.50, the City shall suspend the license and shall notify the licensee of the suspension. The suspension shall remain in effect until the Code violation in question has been corrected. Nothing in this Section shall take away other enforcement powers of the Special Magistrate or any other agency provided by the Code or statute.

86.37 (A)(2) ***Illegal transfer.*** If a license is transferred contrary to § 86.36, the City shall suspend the license and notify the licensee of the suspension. The suspension shall remain

in effect until all of the requirements of this Section have been satisfied and a new license has been issued by the City.

86.37 (A)(3) ***Violations of § 86.50 et seq. and § 86.60 et seq.***

86.37 (A)(3)(a) In the event two or more convictions for violations of the rules and regulations within § 86.50 *et seq*. and § 86.60 *et seq*. or of any health code, statute, or regulation occur within a two Year period, the City shall, upon notification of the date of the second conviction, suspend the license and notify the licensee of the suspension. The suspension shall remain in effect for a period of 60 days.

86.37 (A)(3)(b) In the event one or more convictions for violations of the rules and regulations of § 86.50 *et seq*. and § 86.60 *et seq*. or of any health code, statute, or regulation occur within a period of two Years from the date of the violation from which the conviction resulted for which the license was suspended for 60 days under subsection (a) above, the City shall, upon notification of the date of the first conviction, suspend the license again and notify the licensee of the suspension. The time during which the license was suspended for 60 days shall not be included within the two Year period. The suspension shall remain in effect for a period of 90 days.

86.37 (A)(3)(c) In the event one or more convictions for violations of a rule or regulation of § 86.50 *et seq*. and § 86.60 *et seq*. or of any health code, statute, or regulation occur within a period of two Years from the date of the violation from which the conviction resulted for which the license was suspended for 90 days under (b), the City shall, upon notification of the date of the first conviction, suspend the license again and notify the licensee of the suspension. The time during which the license was suspended for 90 days shall not be included within the two Year period. The suspension shall remain in effect for a period of 180 days.

86.37 (A)(3)(d) The renewal of, or new application for, a license pursuant to this subchapter shall not defeat the terms of this Section.

86.37 (A)(4) ***Effect of suspension.*** If a license is suspended, all operations within the Adult Entertainment Establishment shall cease for the period of the suspension, and the license shall be suspended for the suspension period. The division of Alcoholic Beverages and tobacco shall be notified of the suspension, and no other Person shall be allowed to operate an Adult Entertainment Establishment at that location for a period of six months.

86.37 (A)(5) ***Effective date of suspension.*** All periods of suspension shall begin 15 days, including Saturdays, Sundays, and holidays, after the date the City mails the notice of suspension to the licensee or on the date the licensee surrenders his or her license to the City, whichever occurs first.

86.37 (B) ***Revocation.***

86.37 (B)(1) ***False information.*** In the event it is learned or found, or upon sufficient cause that a license was granted based upon false information, misrepresentation of fact, or

mistake of fact by the licensee or his or her agent, the City shall notify the licensee in writing of the City's intent to revoke the license. The licensee shall have ten days from the date of receipt of the notification to request a hearing. The hearing shall be scheduled before the Special Magistrate. If the licensee does not request a hearing, the license shall be considered revoked ten days after the receipt of the notification. If the licensee does request a hearing, the license shall remain in effect during the pendency of the action before the Special Magistrate.

86.37 (B)(2) ***Convictions for violations of § 86.50 et seq. and § 86.60 et seq.*** In the event one or more convictions for violations of § 86.50 *et seq*. and § 86.60 *et seq*. or of any health code, statute, or regulation occur within a period of two Years from the date of the violation from which the conviction resulted for which the license was suspended for a period of 180 days pursuant to (A)(4) above, the City shall forthwith revoke the license and notify the licensee of the revocation. The time during which the license was suspended for 180 days shall not be included within the two Year period.

86.37 (B)(3) ***Effect of revocation.*** If a license is revoked, the licensee shall not be allowed to obtain another Adult Entertainment license for a period of two Years, and no license shall be issued during that time period to another Person for the location and Premises upon which the Adult Entertainment Establishment was situated.

86.37 (B)(4) ***Effective date.*** The revocation shall take effect 15 days, including Saturdays, Sundays, and holidays, after the date the City mails the notice of revocation to the licensee or on the date the licensee surrenders his or her license to the City, whichever occurs first.

§ 86.38 NAME CHANGES.

No licensee may change the name of an Adult Entertainment Establishment unless and until he or she satisfies all of the following requirements:

86.38 (A) Provides City with 30 days' notice in writing of the proposed name change;

86.38 (B) Pays to the City a change-name fee to be set by resolution of the Commission; and

86.38 (C) Complies with Florida Statutes § 865.09, the Florida Fictitious Name Statute.

§ 86.39 RECORDS AND REPORTS.

86.39 (A) Each licensee shall keep such records and make such reports as may be required by the City and the agencies to implement this Code and to carry out its purpose.

86.39 (B) By holding a license under this subchapter, the licensee shall be deemed to have consented to the provisions of this subchapter and to the exercise by the applicable agencies of their respective responsibilities under this subchapter.

PART 3: REGULATIONS

§ 86.50 GENERAL REQUIREMENTS.

Each Adult Entertainment Establishment shall, regardless of whether it is licensed, observe the following general requirements:

86.50 (A) Conform to all applicable Building statutes, codes, ordinances, and regulations, whether federal, State, or local;

86.50 (B) Conform to all applicable fire statutes, codes, ordinances, and regulations, whether federal, State, or local;

86.50 (C) Confirm to all applicable health statutes, codes, ordinances, and regulations, whether federal, State, or local;

86.50 (D) Conform to all applicable zoning regulations and land Use Laws, whether State or local, including but not limited to the City Zoning Chapter (location restrictions);

86.50 (E) Keep the original of the Adult Entertainment license posted in a conspicuous place at the Establishment at all times, which license shall be available for inspection upon request at all times by the public;

86.50 (F) Opaquely cover each nonopaque area through which a Person outside the Establishment may otherwise see inside the Establishment;

86.50 (G) Maintain a continuously updated compilation of the required records.

§ 86.51 ALCOHOLIC BEVERAGES.

86.51 (A) No Person or Employee shall expose to public view his or her Specified Anatomical Areas, or simulation thereof, in an Establishment selling, serving, or allowing the consumption of Alcoholic Beverages.

86.51 (B) No Person maintaining, owning or operating an Establishment selling, serving, or allowing the consumption of Alcoholic Beverages shall allow a Person or Employee to expose to public view his or her Specified Anatomical Areas, or simulation thereof, within the Establishment.

86.51 (C) No Person maintaining, owning, or operating an Establishment selling, serving, or allowing the consumption of Alcoholic Beverages shall allow the exposure to public view of Specified Anatomical Areas, or the simulation thereof, within the Establishment .

86.51 (D) No Person shall cause and no Person maintaining, owning, or operating an Establishment selling, serving, or allowing the consumption of Alcoholic Beverages shall allow the exposition of graphic representation, including pictures or projection of film, which depicts Specified Anatomical Areas engaged in Specified Sexual Activities, or other sexual acts prohibited by Law, or simulation thereof, within the Establishment.

§ 86.52 SUPPLEMENTARY REQUIREMENTS.

86.52 (A) ***Adult Theaters.*** In addition to the general requirements for an Adult Entertainment Establishment contained in § 86.50 and § 86.51 (A), an Adult Theater shall, regardless of whether it is licensed, observe the following special requirements:

86.52 (A)(1) ***Halls or auditoriums.*** If the Adult Theater contains a hall or auditorium area, the area shall comply with each of the following provisions:

86.52 (A)(1)(a) It shall have individual or separate seats, not couches, benches, beds, or the like, to accommodate the maximum number of Persons who may occupy the area.

86.52 (A)(1)(b) It shall have a continuous main aisle alongside of the seating areas in order that each Person seated in the areas shall be visible from the aisle at all times.

86.52 (A)(1)(c) It shall have a Sign posted in a conspicuous place at or near each entrance way to the hall or auditorium area listing the maximum number of Persons who may occupy the hall or auditorium area, which number shall not exceed the number of seats within the auditorium area.

86.52 (A)(1)(d) Premises shall be equipped with overhead lighting fixtures of sufficient intensity to illuminate every place to which patrons are permitted access at an illumination of not less than one foot-candle as measured at floor level.

86.52 (A)(1)(e) It shall be the duty of the licensee, the Owners, and Operator and it shall also be the duty of any agents and Employees present on the Premises to ensure that the illumination described above is maintained at all times that any patron is present on the Premises.

86.52 (A)(1)(f) It shall have posted an AIDS crisis Sign visible to all patrons on the side of the door that opens and allows patrons to enter the theater.

86.52 (A)(2) ***Refurbishing of Adult Theaters.***

86.52 (A)(2)(a) Each Adult Theater subject to this subchapter shall cover the floor of areas accessible to patrons with smooth and nonpermeable flooring material which can withstand frequent effective cleaning in accordance with paragraph (3)(c) of this subsection (A). Carpeting of any type is prohibited.

86.52 (A)(2)(b) Each Adult Theater subject to this subchapter shall use smooth and non-permeable upholstery material which can withstand frequent cleaning in accordance with (3)(c) below to cover furniture permitted by this subchapter for use of patrons.

86.52 (A)(2)(c) Each Adult Theater subject to this subchapter shall have, in areas accessible to patrons, interior wall surfaces which can withstand frequent cleaning in accordance with paragraph (3) (c) below.

86.52 (A)(2)(d) Each Adult Theater subject to this subchapter shall use only those shades, blinds, and vertical blinds which can withstand frequent cleaning in accordance with (3)(c) below. Draperies are prohibited.

86.52 (A)(3) ***Sanitation.***

86.52 (A)(3)(a) All areas of each Adult Theater subject to this subchapter which are accessible to patrons shall be maintained in a clean and sanitary condition. The surfaces of all floors, furniture, counter tops, shades, blinds, vertical blinds, doors and walls of areas accessible to patrons shall be cleaned in accordance with (c) below.

86.52 (A)(3)(b) All floors, furniture, counter tops, shades, blinds, vertical blinds, doors and walls of areas accessible to patrons of Adult Theaters subject to this subchapter shall be renovated or be replaced as needed. All furniture must be kept free from holes and rips.

86.52 (A)(3)(c) Any individual cleaning or sanitizing of the areas accessible to patrons shall be accomplished a minimum of one time each 24 hours with a 1:10 bleach solution (1 part bleach to 10 parts water), mixed daily, as recommended by the U.S. Center for Disease Control as a precaution for the prevention of transmission of the HIV virus and other diseases. A copy of the approved procedure shall be kept on file at the Adult Theater and a copy shall be provided to each Person cleaning or sanitizing the areas accessible to the patrons. Each such individual shall certify that he or she has read and understood the procedure. The signed copy shall be kept as a part of the records of the Adult Theater, and open for inspection by the applicable agencies.

86.52 (B) ***Adult Dancing Establishment.*** In addition to the general requirements for an Adult Entertainment Establishment contained in § 86.50 and in (A) above, an Adult Dancing Establishment shall, regardless of whether it is licensed, observe the following special requirements:

86.52 (B)(1) It shall have a stage provided for the display or exposure of Specified Anatomical Areas by an Employee to a Person other than another Employee consisting of a permanent platform (or other similar permanent structure) raised a minimum of 18 inches above the surrounding floor and encompassing an area of at least 100 square feet; and

86.52 (B)(2) The exposure by an Employee of Specified Anatomical Areas, or simulation thereof, to public view shall be restricted to the stage required in (1) above; and nonemployees or patrons shall not be allowed closer than four feet to the stage edge when an Employee exposes those anatomical areas;

86.52 (B)(3) The Adult Entertainment Establishment shall provide two security Officers consisting of sworn Law Enforcement Officers or identified security personnel if the occupant capacity is less than or equal to 150 Persons, and an additional sworn Law Enforcement Officer or identified security personnel for each additional increase of occupant capacity of one hundred 100 Persons. The security Officers or personnel shall be granted unfettered access to all parts of the Adult Entertainment Establishment in order to monitor the interior and exterior of the Adult Entertainment Establishment; and

86.52 (B)(4) The Adult Entertainment Establishment shall check identification at the door to ensure that minors do not enter; and

86.52 (B)(5) An area in which a Private Performance occurs shall:

86.52 (B)(5)(a) Have a permanently open entrance way not less than seven feet wide and not less than seven feet high, which entrance way will never be closed or partially closed by a curtain, door, or other partition which would be capable of wholly or partially obscuring a Person situated in the area; and

86.52 (B)(5)(b) Have a wall-to-wall, floor-to-ceiling partition of solid construction without holes or openings, which partition may be completely or partially transparent and which partition separates the Employee from the Person viewing the display;

86.52 (B)(5)(c) Have, except for the entrance way, walls or partitions of solid construction without holes or openings in such walls or partitions; and

86.52 (B)(5)(d) The Private Performance area shall be at least 100 square feet in size.

PART 4: ADDITIONAL PROHIBITIONS

§ 86.60 OPERATING WITHOUT A LICENSE.

It shall be unlawful for a Person to operate or participate in the operation of an Adult Entertainment Establishment when the Person knows or should know:

86.60 (A) That the Establishment does not have an Adult Entertainment license for the applicable classification;

86.60 (B) That the Establishment has a license that is under suspension;

86.60 (C) That the Establishment has a license that has been revoked or canceled; or

86.60 (D) That the Establishment has a license that has expired.

§ 86.61 OPERATING IN VIOLATION OF REQUIREMENTS.

86.61 (A) It shall be unlawful for a Person to be an Operator of an Adult Entertainment Establishment that does not satisfy all of the general requirements of § 86.50 *et seq.*

86.61 (B) It shall be unlawful for a Person to be an Operator of an Adult Theater that does not satisfy all of the special requirements of § 86.62(A).

86.61 (C) It shall be unlawful for a Person to be an Operator of an Adult Dancing Establishment that does not satisfy all of the special requirements of § 86.52(B).

§ 86.62 ALLOWING EMPLOYEE TO ENGAGE IN PROHIBITED ACTS.

It shall be unlawful for an Operator of an Adult Entertainment Establishment, regardless of whether it is licensed under this subchapter, to knowingly, or with reason to know, allow an Employee:

86.62 (A) To engage in a Lap Dance with a Person at the Establishment;

86.62 (B) To contract or otherwise agree with a Person to engage in a Lap Dance with a Person at the Establishment;

86.62 (C) To contract or otherwise agree with a Person to engage in specified sexual activity at the Establishment;

86.62 (D) To display or expose Specified Anatomical Area unless while simulating specified sexual activity with another Person at the Establishment, including with another Employee;

86.62 (E) To allow a Person, excluding another Employee, to touch a portion of the clothed or unclothed body of the Employee below the neck and above the knee, excluding that part of the Employee 's arm below the wrist, referred to as the hand;

86.62 (F) To engage in a Private Performance unless such Employee is in an area that complies with the special requirements of § 86.50 *et seq.*; or

86.62 (G) To intentionally touch the clothed or unclothed body of a Person at the Adult Entertainment Establishment, excluding another Employee, at a point below the neck and above the knee of the Person, excluding that part of the Person's arm below the wrist, referred to as the hand.

§ 86.63 ADVERTISING PROHIBITED ACTIVITY.

It shall be unlawful for an Operator of an Adult Entertainment Establishment, regardless of whether it is licensed under this Code, to advertise the presentation of an activity prohibited by an applicable State statute or local ordinance.

§ 86.64 SPECIFIED CRIMINAL OFFENSE.

It shall be a violation of this subchapter if the licensee is convicted or is adjudged guilty of a Specified Criminal Offense for activities that occurred at the Establishment, or if it has been determined that Specified Criminal Offenses have occurred at the licensed Premises.

§ 86.65 MINORS PROHIBITED.

It shall be unlawful for an Operator of an Adult Entertainment Establishment, regardless of whether it is licensed under this subchapter, to knowingly, or with reason to know, allow:

86.65 (A) Admittance to the Establishment of a Person under 18 years of age;

86.65 (B) A Person under 18 years of age to remain at the Establishment;

86.65 (C) A Person under 18 years of age to purchase goods or services at the Establishment; or

86.65 (D) A Person to work at the Establishment as an Employee who is under 18 years of age.

§ 86.66 WORKING AT UNLICENSED ESTABLISHMENT.

It shall be unlawful for a Person to work in an Adult Entertainment Establishment which he or she knows or should know is not licensed under this Code, or that has a license which is suspended, revoked, canceled, or expired.

§ 86.67 ENGAGING IN PROHIBITED ACTIVITY.

It shall be unlawful for an Employee of an Adult Entertainment Establishment, regardless of whether it is licensed under this subchapter:

86.67 (A) To engage in a Lap Dance with a Person at the Establishment;

86.67 (B) To contract or otherwise agree with a Person to engage in a Lap Dance with a Person at the Establishment;

86.67 (C) To engage in specified sexual activity at the Establishment;

86.67 (D) To display or expose at the Establishment less than completely and opaquely covered a Specified Anatomical Area unless such Employee is continuously positioned away from a Person other than another Employee, and unless such Employee is in an area as described in § 86.52 (B);

86.67 (E) To engage in the display or exposure of a Specified Anatomical Area unless while simulating a specified sexual activity with another Person at the Establishment, including with another Employee;

86.67 (F) To engage in a Private Performance unless such Employee is in an area which complies with the special requirements set forth in § 86.52 (B);

86.67 (G) To intentionally touch the clothed or unclothed body of a Person at the Adult Entertainment Establishment, excluding another Employee, at a point below the neck and above the knee of the Person, excluding that part of the Person's arm below the wrist, referred to as the hand; or

86.67 (H) To allow a Person, excluding another Employee, to touch a portion of the clothed or unclothed body of the Employee below the neck and above the knee, excluding that part of the Employee's arm below the wrist, referred to as the hand.

§ 86.68 TOUCHING OF EMPLOYEE BY NONEMPLOYEE.

It shall be unlawful for a Person in an Adult Entertainment Establishment, other than another Employee, to intentionally touch the unclothed or clothed body of an Employee at a point below the neck and above the knee of the Employee, excluding that part of the Employee 's arm below the wrist, referred to as the hand.

§ 86.69 ADULT MINI MOTION PICTURE THEATERS, ADULT BOOTHS, AND OUTDOOR ADULT THEATERS PROHIBITED.

Adult Mini Motion Picture Theaters, Adult Booths, and Outdoor Adult Theaters are hereby prohibited within the City.

§ 86.70 USE OF REST ROOMS OR DRESSING ROOMS.

86.70 (A) Notwithstanding a provision to the contrary, it shall not be unlawful for an Employee of an Adult Entertainment Establishment, regardless of whether it is licensed under this subchapter, to expose a Specified Anatomical Area unless during the Employee's bona fide Use of a rest room, or during the Employee 's bona fide Use of a dressing room, which is accessible only and restricted to Employees.

86.70 (B) The restrictions of § 86.50 *et seq*. and § 86.60 *et seq*., including but not limited to §§ 86.62, 86.67, 86.68 and 86.34, also apply to all rest rooms and dressing rooms.

86.70 (C) Notwithstanding a provision to the contrary, it shall not be deemed unlawful for a Person to expose a Specified Anatomical Area unless during that Person's bona fide Use of a rest room.

§ 86.71 HOURS OF OPERATION.

86.71 (A) It shall be unlawful for an Operator of an Adult Entertainment Establishment to allow such Establishment to remain open for business, or to allow an Employee to engage in a performance, solicit a performance, make a sale, solicit a sale, provide a service, or solicit a service, between the hours of 1:00 a.m. and 7:00 a.m. on all days.

86.71 (B) It shall be unlawful for an Employee of an Adult Entertainment Establishment to engage in a performance, solicit a performance, make a sale, solicit a sale, provide a service, or solicit a service, between the hours of 1:00 a.m. and 7:00 a.m. on all days.

§ 86.80 NOTICES.

A notice required under this subchapter shall be accomplished by sending a written notification by certified mail, return receipt requested, to the mailing address set forth on the application for the license. This mailing address shall be considered the correct mailing address unless the Business Tax Receipt Coordinator has been otherwise notified in writing by certified mail, return receipt requested, by the licensee of the new address. The licensee shall have the burden of proving the Business Tax Receipt Coordinator received the new address.

CHAPTER 87. PAY TELEPHONES.

§ 87.01 PAY TELEPHONES.

No Pay Telephones shall be placed, installed or maintained on any Public Rights-Of-Way within the City. The only Pay Telephones that may be placed, installed or maintained within the City shall be located on Private Property within two feet of a Building or Structure or inside such Building or Structure, unless a variance is obtained pursuant to §§ 124.80 *et seq*. Notwithstanding the foregoing, the City may permit Pay Telephones to be placed, installed or maintained at any locations at municipally owned facilities.

CHAPTER 88. PRIVATE DETECTIVES AND CRIMINAL INVESTIGATORS.

§ 88.01 PRIVATE DETECTIVES AND CRIMINAL INVESTIGATORS.

88.01 (A) All private detectives or criminal investigators maintaining a physical office in the City are required to obtain a Business Tax Receipt.

88.01 (B) In addition to the above requirements, the following prohibitions shall apply to any Person licensed by the Florida Secretary of State pursuant to Florida Statutes Chapter 493 to operate under a Class "B" or Class "D" license:

88.01 (B)(1) A receipt holder shall not use any designation or trade name which implies or gives an impression that such Person is associated with any Police Department, including but not limited to using the word "police" or "Weston police" or "BSO" or "Broward Sheriff's Office" or any official seal or facsimile thereof of the City, Broward County or State on badges, cap shields, patches, automobiles, decals, or advertisements within the City.

88.01 (B)(2) Receipt holders shall not utilize uniforms or badges capable of being associated or confused with or of the same color and with similar insignia to the official uniforms of any Police Department.

88.01 (C) Provisions of this Section shall not apply to any police Officer of the City when performing duties approved by his or her superiors.

88.01 (D) Any violations of this Section may be punished up to the maximum penalty provided in this Code.

CHAPTER 89. MOBILE VENDING.

§ 89.01 MOBILE VENDING PERMITTED.

Mobile vending shall only be permitted as follows:

89.01 (A) ***Construction site.*** Upon invitation from the property Owner, a Mobile Vendor may visit any duly permitted Construction site during working hours. The time of stay of said Mobile Vendor shall not exceed more than one hour per visit to the property and may not exceed two visits to the site per day.

89.01 (B) ***Commercial Establishment***. Any Commercial Establishment with a valid Business Tax Receipt may allow a Mobile Vendor to enter upon the Private Property of said establishment for the purpose of supplying the needs of the employees of said establishment with food, beverages, or other items (e.g. office supplies, tools, etc.). Each visit by the Mobile Vendor shall not exceed one hour per visit and may not exceed one visit to the property per day.

89.01 (C) ***Not-for-profit enterprises.*** Not-for-profit enterprises, such as blood banks or mobile charitable donation centers, may locate on non-residentially zoned property for a period not to exceed four hours. Such uses shall be limited to a total of six visits to said property per Year.

§ 89.02 PROHIBITIONS.

Mobile Vendors shall not:

89.02 (A) ***Schools.*** Vend within 500 feet of the grounds of any kindergarten, nursery, elementary, middle, or high school between one hour prior to the start of the school day and one hour after dismissal at the end of the school day.

89.02 (B) ***Public Parks.*** Vend within or on the Right-Of-Way immediately adjacent to a Public Park.

89.02 (C) ***Creation of hazard.*** Vend in such a way as would restrict or interfere with the ingress of the abutting property Owner or Tenant, or create or become a public nuisance, increase Traffic congestion or delay, or constitute a hazard to Traffic, life or property or an obstruction to adequate access to fire, police, or sanitation services.

89.02 (D) ***Distract motorists.*** Wave, flag, or motion to vehicles on the Street.

89.02 (E) ***Attract pedestrians or vehicles.*** Use bells, whistles, music, or other sound or other audio devices while parked or stopped in order to attract pedestrians or vehicles.

89.02 (F) ***Litter receptacle.*** Vend food or beverages for immediate consumption unless the Mobile Vendor has available for public use its own Litter receptacle that is available for the use of its patrons.

89.02 (G) ***Alcoholic Beverages, tobacco.*** Vend Alcoholic Beverages or tobacco products.

89.02 (H) ***Litter.*** Leave any location without first picking up, removing and disposing of all Trash, materials, or Refuse remaining from sales made by the Mobile Vendor or from the conduct of its operation.

89.02 (I) ***Placement of related items.*** Allow any items relating to the operation of the vending business to be placed anywhere other than in or on the Mobile Vending Vehicle.

89.02 (J) ***Displays.*** Set up, maintain or permit the use of any table, crate, carton, rack or any other device to increase the selling or display capacity of the Mobile Vending Vehicle, unless otherwise shown on an approved site plan.

89.02 (K) ***Hazardous materials.*** Allow any hazardous materials, as defined in Florida Statutes, to be Discharged from a Mobile Vending Vehicle.

89.02 (L) ***Required licenses and permits.*** Vend without holding all required licenses and permits or without having all required safety equipment on the Mobile Vending Vehicle, including the written approval from the Broward County Health Department for the operation of said business.

CHAPTER 90. NEWSPAPER RACKS.

§ 90.01 NEWSPAPER RACKS.

90.01 (A) ***Purpose and criteria.*** The purpose of the following is to promote the public health, safety, and welfare through the regulation of placement, type, appearance, servicing, and insuring of Modular Newsracks on Public and Private Rights-Of-Way so as to:

90.01 (A)(1) Provide for pedestrian and driving safety and convenience.

90.01 (A)(2) Restrict unreasonable interference with the flow of pedestrian or vehicular Traffic including ingress into or egress from any residence or place of business, or from the Street to the Sidewalk by Persons exiting or entering parked or Standing vehicles.

90.01 (A)(3) Provide for public and property safety during hurricane or severe windstorm conditions.

90.01 (A)(4) Provide reasonable access for the Use and maintenance of poles, posts, traffic signs or signals, hydrants, and mailboxes and access to locations used for public transportation purposes.

90.01 (A)(5) Maintain and protect the values of surrounding properties.

90.01 (A)(6) Reduce unnecessary exposure of the public to personal injury or property damage.

90.01 (A)(7) Treat all newspapers equally regardless of their size, content, circulation, or frequency of publication.

90.01 (A)(8) Maintain and preserve freedom of the press.

90.01 (A)(9) Cooperate to the maximum extent possible with newspaper distributors.

90.01 (A)(10) Relocate and/or replace Newsracks and/or Modular Newsracks that obstruct drivers' sight lines, create a visual blight, occupy excessive space on the Public Rights-Of-Way, or which unreasonably detract from the aesthetics of store window displays and adjacent Landscaping.

90.01 (B) ***Certificate of compliance required.*** No Person shall place, affix, erect, construct, or maintain a Modular Newsrack without first obtaining a certificate of compliance for each Modular Newsrack in accordance with the provisions of this Section.

90.01 (C) ***Application and issuance of certificate of compliance.***

90.01 (C)(1) ***Issuing authority.*** The issuing authority and coordinator shall be the City Manager. The City Manager is responsible for coordinating and administering the physical placement of Modular Newsracks herein specified.

90.01 (C)(2) ***Approving authority.*** The approving authority shall be the City Manager.

90.01 (C)(3) ***Applications.*** The Applicant shall file with the City Manager a written application for a certificate of compliance that shall contain the following information:

90.01 (C)(3)(a) The name, address, and telephone number of the Applicant who is the Owner and/or principal in charge of the Modular Newsrack.

90.01 (C)(3)(b) The name, address, and telephone number of a responsible Person whom the City may notify or contact at any time concerning the Applicant's Modular Newsracks.

90.01 (C)(3)(c) The number of Modular Newsracks and the proposed location of each shown on a drawing.

90.01 (C)(3)(d) Names of newspapers or periodicals to be contained in each Modular Newsrack.

90.01 (C)(3) (e) A certification that the Modular Newsracks shall be installed in conformance with the provisions of this Section in their entirety. More than one Modular Newsrack location may be included on a certificate of compliance.

90.01 (C)(4) ***Denial of certificate of compliance.*** If a certificate of compliance for a Modular Newsrack location is denied, the Applicant shall be notified within five working days of the City's receipt of the completed application. The City Manager will suggest alternative locations and shall advise the Applicant of the specific cause of such denial. The Applicant may reapply for a substitute alternative location but will not be assessed an additional Publisher's fee, described in subsection (D) below.

90.01 (C)(5) ***Additional certificate(s) of compliance.*** If, at any time after the initial application for an installation certificate of compliance, a publisher wishes to install additional Modular Newsracks, then paragraph (3) above is to be repeated in accordance with the provisions of this Section. Additional certificate of compliance fees shall be in accordance with subsection (D) except that the one-time Publisher's fee is waived if previously paid.

90.01 (D) ***Fees.*** The City shall charge a one-time only Publisher's fee for each Applicant making its first application to the City for an installation certificate of compliance. The City shall also charge a separate, additional one-time only certificate of compliance fee for each Modular Newsrack location selected by that Applicant. Both the Publisher's fee amount and the certificate of compliance fee amount(s) shall be set by Resolution of the City Commission. Failed inspections at the time of installation are subject to a re-inspection fee in an amount also to be set by Resolution of the City Commission.

90.01 (E) ***Placement generally.***

90.01 (E)(1) Subject to the prohibitions set forth in subsection (H), in areas where Sidewalks abut a curb, Modular Newsracks shall be placed parallel to and not less than 18

inches nor more than 24 inches from the edge of the traveled Roadway or paved parking lane.

90.01 (E)(2) Modular Newsracks placed near the wall of a Building must be placed parallel to and not more than six inches from the wall.

90.01 (E)(3) No Modular Newsrack shall be chained, bolted or otherwise attached to any fixture or Tree located in the Public Right-Of-Way.

90.01 (E)(4) Modular Newsracks may be placed next to each other, provided that no group of Modular Newsracks shall extend for a distance of more than 12 feet along a curb. A group of Modular Newsracks may consist of no more than 12 pockets or compartments.

90.01 (E)(5) Subject to the prohibitions set forth in subsection (H), in locations where the City Manager determines there is a potential for vehicular Traffic to become obstructed due to individuals Stopping their vehicles to obtain Newsrack publications, an Applicant may seek approval from the City Manager to incorporate "pull off" areas at those locations in order to be allowed to install Modular Newsracks at such locations. "Pull off" area means a Roadway improvement consisting of an additional portion of paved Roadway on the side of Roadway travel lanes where vehicles could safely pull off the adjacent travel lanes in order to Stop at the Modular Newsracks. The City will construct and maintain each pull-off area. The cost of initial Construction and subsequent maintenance for each pull-off area will be borne by the City and defrayed by an annual fee to be set by resolution of the City Commission that will apply to each such area. The fee shall be payable annually on October 1 of each Year. Such fee for each area shall be shared proportionally by all Applicants for that area, based upon the number of pockets or compartments of a Newsrack that are used by each Applicant at that pull-off area during that Year. For any pull-off constructed and completed between October 1 and April 1 of a subsequent Year, the full fee shall be imposed and collected by the City; for each pull-off constructed and completed between April 1 and September 30, one-half of the fee shall be imposed and collected by the City.

90.01 (F) ***Installation and maintenance.***

90.01 (F)(1) All Modular Newsracks shall be placed on a pedestal or platform and may not exceed 60 inches in height. The height of the handles and coin slots shall not exceed 48 inches from the base of any Modular Newsracks

90.01 (F)(2) Modular Newsracks shall carry no card holders or advertising, but may display the name, with lettering and background of any colors, of the newspaper being dispensed, in spaces in the locations and sizes set forth below:

90.01 (F)(2)(a) On the front of the Modular Newsrack, the lettering size shall not exceed 1¾ inches in height. The lettering shall be placed within a colored-band space not exceeding 2½ inches in height above the door hinge.

90.01 (F)(2)(b) On the sides and back of the Modular Newsrack, the lettering size shall not exceed 2½ inches in height. The lettering shall be placed within a colored-band space not exceeding 4½ inches in height and beginning one inch from the top of the Newsrack.

90.01 (F)(3) Modular Newsracks for free newspapers may omit the coin box and may have the pull bar welded to the door to produce an "honor rack."

90.01 (F)(4) Modular Newsracks shall be maintained in good working order at all times. They shall be maintained in a neat, clean condition and must not be rusted; their paint must not be chipped, faded, peeling or cracked. Their clear plastic or glass display windows shall be unbroken and shall be reasonably free of cracks, dents and discoloration. The color of all Modular Newsracks shall be forest green.

90.01 (F)(5) Mounts shall be bolted in place through four standard holes in the base place in accordance with standards provided in subsection (G). Modular Newsracks cabinet tops shall be installed and checked for level. A water-soluble, paintable, ten-year caulk of gloss brown color shall be applied and wiped to seal around the base plate and the mounting surface.

90.01 (G) ***Modular Newsrack mounting standards.*** The following standards shall be applicable to the mounting of Modular Newsracks in this City:

90.01 (G)(1) Foundation minimum: four-inch concrete, 2500 psi (28 day strength), Class1, unless such minimum foundation already exists where a Modular Newsrack is to be installed.

90.01 (G)(2) Six-inch minimum concrete edge distance for bolts.

90.01 (G)(3) Three-eighths-inch minimum diameter hot-dipped galvanized hex bolt mounts, three-inch minimum embedment, threads down, through four corners of the pedestal base.

90.01 (H) ***Prohibitions.*** No stand-alone Newsrack(s) shall be placed, installed or maintained on any Public or Private Rights-Of-Way in the City. The only Newsracks that may be placed, installed or maintained on any Public or Private Rights-Of-Way in the City shall be Modular Newsracks. In addition, the prohibitions common to all businesses within the City, as set forth in this Code, shall apply to Modular Newsracks. No Modular Newsracks shall be placed, installed, used, or maintained:

90.01 (H)(1) Within 30 feet of any crosswalk.

90.01 (H)(2) Within 30 feet of the intersection of public or private Streets, Roadways, driveways and entryways.

90.01 (H)(3) On the Median of a divided Street or on a similar type landscaped or paved island in the center of a Public or Private Right-Of-Way.

90.01 (H)(4) Within 30 feet of any fire hydrant, fire call box, police call box, or other emergency facility.

90.01 (H)(5) Within 15 feet of any Sign marking a designated bus stop.

90.01 (H)(6) Within 15 feet of any bus bench, plaza bench or bus shelter.

90.01 (H)(7) Where any portion of a Newsrack /Modular Newsrack is on or within 12 inches of any area improved with Lawn or Hedges, other than a Swale, or within three feet of flowers or Trees.

90.01 (H)(8) Within three feet of any display window of any Building abutting the Sidewalk or parkway or in such a manner as to impede or interfere with the reasonable Use of such window display purpose, or within five feet of a Building entrance.

90.01 (H)(9) On or within five feet of Street and traffic Signs, parking meters, Street lights, or Utility Poles.

90.01 (H)(10) At any location that does not provide clear width of continuous passage of at least 36 inches in accordance with the Americans with Disabilities Act.

90.01 (H)(11) At any location where the City Manager determines that placement of a Modular Newsrack is likely to cause drivers to Stop or Park in an unsafe, obstructive position blocking either a driver's sight line or a Roadway.

90.01 (H)(12) Within 1,000 feet of any other Modular Newsrack or group of Modular Newsracks located on a Public or Private Right-Of-Way, except as allowed under subsection (G)(5) above.

90.01 (I) ***Enforcement.***

90.01 (I)(1) ***Nonconforming Newsracks.*** Any Newsrack or Modular Newsrack in violation of any provision of this Section shall be subject to the procedures, remedies and due process under the provisions of this code pertaining to code enforcement, as well as the following rules:

90.01 (I)(1)(a) Upon determination by the code enforcement division that a Newsrack or Modular Newsrack violates this Section, a notice to correct the violation shall be issued to the responsible entity.

90.01 (I)(1)(b) The notice to correct a violation shall specifically describe the violation and may suggest actions necessary to cure the violation. The notice shall be mailed by certified mail with return receipt requested to the publishing entity or other responsible party.

90.01 (I)(1)(c) The time period within which a violation must be corrected shall be written on the notice to correct the violation, and that time period may vary based on the nature of the violation.

90.01 (I)(1)(d) Failure to correct the violation within the time period specified on the notice to correct the violation shall result in the removal of the nonconforming Newsrack or Modular Newsrack by the City. Upon removal, the City shall store the Newsrack or Modular Newsrack for 90 days and, if the fixture is not claimed during that time period and the appropriate removal, administrative and storage fees paid, the City may dispose of the Newsrack or Modular Newsrack in any manner deemed appropriate.

90.01 (I)(2) ***Abandoned Modular Newsracks.***

90.01 (I)(2)(a) If any Modular Newsrack installed pursuant to this Section does not contain the publication specified therefore within a period of 48 hours after release of the current issue, Code Enforcement may deem the Modular Newsrack abandoned and take appropriate action under this Code. In addition, a Modular Newsrack shall be deemed abandoned when no publication is in the Modular Newsrack for a period of more than seven consecutive days.

90.01 (I)(2)(b) In the event a newspaper publishing company or its distributor desires to voluntarily abandon a Modular Newsrack location, the distributor shall notify the City Manager, completely remove the Modular Newsrack and mount, and restore the Public Right-Of-Way to a safe condition, leaving no holes or projections in the mounting surface.

90.01 (J) ***Appeal of notice to correct violation.*** In the event the responsible entity chooses to appeal the notice to correct violation, it must do so within the time period specified for compliance in the notice given by the City. The appeal must be requested in writing and sent to the City Manager in order to appear before the Special Magistrate for review of the notice to correct violation. The appeal shall be heard by the Special Magistrate within 30 working days of the filing of the appeal, unless the parties mutually agree to an extension of this time period. The decision of the Special Magistrate on appeal is subject to judicial review as provided by the Florida Statutes. The removal of the Newsrack or Modular Newsrack alleged to be in violation shall be stayed pending final disposition of the appeal.

90.01 (K) ***Insurance and Indemnification.***

90.01 (K)(1) Prior to the issuance of a certificate of compliance by the City, the Applicant shall submit to the City Manager a certificate of insurance naming the City as an additional insured. The certificate of insurance must be kept current and renewed as long as the Applicant maintains a Modular Newsrack on Public Property within the City. Such insurance shall be comprehensive general liability or commercial general liability coverage on a form no more restrictive than the latest edition of the comprehensive General Liability Policy or Commercial General liability filed by the Insurance Service Office. Minimum limits of total coverage shall be $1,000,000 per occurrence and/or aggregate combined single limit, personal injury liability, bodily injury liability and property damage liability. Coverage shall include the following extensions:

90.01 (K)(1)(a) Contractual liability;

90.01 (K)(1)(b) Products and completed operations;

90.01 (K)(1)(c) Independent contractor's coverage; and

90.01 (K)(1)(d) Broad form general liability extensions or equivalent.

90.01 (K)(2) Comprehensive General Liability insurance, as described in (a) - (d) above, shall include an endorsement stating the following: "Sixty (60) days advance written notice of cancellation or non- renewal shall be sent to the City Clerk's office."

90.01 (K)(3) Reasonable evidence of equivalent self-insurance coverage may be substituted by the Applicant for the above certificate of insurance, subject to the approval of the City Manager. Insurance under this Section shall run continuously with the presence of the Applicant's Newsrack in City Rights-Of-Way and any termination of lapse of such insurance shall be a violation of this Section, subject to appropriate remedy by the City as authorized by this Code.

90.01 (K)(4) Every Applicant who places or maintains a Modular Newsrack on a Public Right-Of-Way, public Sidewalk, Street or Swale in the City, shall execute a written agreement, prepared by the City, under which it agrees to indemnify, hold harmless and defend the City, its officers, agents and employees from any loss, liability or damage, including expenses and costs, for bodily or personal injury, and for property damage sustained by any Person as a result of the installation, use and/or maintenance of a Modular Newsrack within the City (the "Indemnification Agreement"). The Indemnification Agreement shall read as follows:

(name of applicant) covenants and agrees unconditionally, absolutely and irrevocably, that it will indemnify, defend and hold harmless the City and its officials, officers, partners, employees, affiliates, successors and assigns from any and all claims, liabilities, losses, orders, judgments, decrees, damages, response costs, remediation costs, fines, penalties, fees, and expenses of every and any kind whatsoever including attorney's fees and costs (at both the trial and appellate levels) arising out of or in any way relating to the installation, use and/or maintenance of Modular Newsracks within the City.

90.01 (L) ***Sovereign Immunity.*** This Section shall not be construed to affect in any way the City's rights, privileges, and immunities as set forth in Florida Statutes § 768.28.

CHAPTER 91. LETTERING ON COMMERCIAL VEHICLES.

§ 91.01 LETTERING ON COMMERCIAL VEHICLES.

91.01 (A) ***Descriptive lettering required.***

91.01 (A)(1) Every Motor Vehicle used to transport people or materials, to provide home or business Construction, repair, maintenance, Landscaping, delivery or moving services of any kind shall have prominently displayed on each side thereof the following information:

91.01 (A)(1)(a) The trade name, symbol, or "Logo" of the corporation, partnership, proprietorship, Person or individual, or other business entity utilizing the vehicle for a commercial purpose.

91.01 (A)(1)(b) The general nature or character of the business, if the trade name or symbol does not describe the general nature of the business.

91.01 (A)(1)(c) The Street address of the business, or if there is none, then the resident Street address of the Person owning or operating the business or the telephone number of the business, or if none, the telephone number of the Person owning or operating the business.

91.01 (A)(2) The information required to be placed upon the vehicle by subsection (A) (1) above shall be in letters and numerals at least 1½ inches high, distinctly contrasting in color with the background, and shall, at all times that the vehicle is utilized for commercial purposes within the City, be affixed, attached or displayed on the vehicle in such a manner so as to be readily distinguishable from a distance of not less than ten meters (32.8 feet).

91.01 (B) ***Enforcement.*** All law Enforcement Officers and Code Enforcement Officers shall have the power and authority to enforce the provisions of this Section.

91.01 (C) ***Applicability of provisions.*** The provisions of this Section shall be cumulative to all State, Broward County, and municipal Laws or ordinances now or hereafter enacted.

CHAPTER 92. COMMERCIAL MAIL RECEIVING AGENCIES.

§ 92.01 COMMERCIAL MAIL RECEIVING AGENCIES.

92.01 (A) ***Commercial mail receiving agencies obtaining personal information on all renters of mailboxes.*** All Owners/operators/employees of Commercial Mail Receiving Agencies (CMRAs) shall obtain personal information on all Persons who rent mailboxes in their CMRA from two forms of acceptable identification (driver's license; military or other government ID; passport; national credit cards; alien registration card; and birth certificate, and at least one containing a photo of the renter), including, but not limited to: name; address; date of birth; telephone number; and driver's license number and state issued. That information shall be placed on United States Postal Service Form 1583 or other application form equivalent to Form 1583, and a copy of the form shall be retained on the CMRA Premises during normal business hours. A photocopy of the photo identification presented by the renter shall be taken and retained with the Form 1583 on the Premises.

92.01 (B) ***Commercial mail receiving agencies releasing personal information on renters to law Enforcement Officers.*** A CMRA Owner/operator/employee shall release a copy of the Form 1583 or other application form and its contents (personal information), including the photocopy of the identification used, to any law Enforcement Officer (with proper agency identification) requesting information pursuant to a criminal investigation.

92.01 (C) ***Commercial mail receiving agencies disclosure of release of information to law Enforcement Officers.*** The CMRA Owner/operator/employee shall not disclose the existence of the law enforcement request for information to the mailbox renter or any associate of the mailbox renter, as any such disclosure may obstruct and impede the criminal investigation being conducted and thereby interfere with the enforcement of the Law.

92.01 (D) ***Penalties for violation of this Section.*** Whoever violates this Section shall be punished as provided in §2.99, except that violators of §92.01 (B), failure to obtain and retain renter personal information, shall be fined not more than $500.

CHAPTER 93. SOLID WASTE COLLECTION FRANCHISE.

§ 93.01 FRANCHISE REQUIRED.

It shall be unlawful to commence or engage in the business of collecting and disposing of solid waste originating in the City without a franchise issued by the franchising authority in accordance with the provisions of this Chapter.

§ 93.02 FRANCHISE FEE.

The City has granted an exclusive solid waste franchise to Republic Service of Florida, L.P. d/b/a All Service Refuse ("All Service"), and has entered into a solid waste, bulk waste and Recycling collection services agreement with All Service (the "agreement"). All Service shall pay a franchise fee of 20% of gross revenues, as that term is defined in the agreement, derived from all residential curbside collection services and all other related services it performs within the City. The fee shall be paid to the City in monthly installments on or before the fifteenth day of each month, as required by the agreement.

TITLE IX: PROPERTY-REAL AND PERSONAL

CHAPTER 95. PROPERTY MAINTENANCE.

§ 95.01 RESIDENTIAL PROPERTY

95.01 (A) ***Single-Family residential.*** The Owner and/or operator of Single-Family residential property within the corporate limits of the City shall comply with the following minimum maintenance standards:

95.01 (A)(1) ***General maintenance.*** The exterior of all fences, garden walls, and similar enclosures, where exposed to the public view, shall be maintained in good condition and shall not show evidence of deterioration, ripping, tearing, or other holes or breaks. Painted or stained surfaces shall be free of peeling paint, mold, or mildew and maintained with uniform colors, void of any evidence of deterioration. All fences or walls in a continuous line shall be uniform in color. All surfaces, including Roofs, requiring painting or which are otherwise protected from the elements shall be kept painted or protected. All surfaces, including Roofs, shall be maintained free of mold, mildew, rust stains, loose tiles or other surfacing material, crumbling stone, brick, or stucco, or other conditions reflective of deterioration or inadequate maintenance. All Roofs shall be kept free from equipment or materials that are not permanently affixed to a Roof, unless the equipment or materials are actively being used.

95.01 (A)(2) ***Temporary Structures, Trailers, and outbuildings.*** No Structure of a temporary character, including but not limited to, Trailer, shack, garage, barn, or other outbuilding shall be permitted on any property. Notwithstanding the foregoing, tents are permitted for no more than 72 hours.

95.01 (A)(3) ***Obstructions of visibility.*** No obstruction to visibility at Street intersections or access easement intersections, or obstruction of Traffic Control Devices, either in the form of Landscaping or shrubbery or fence or other Structure, shall be permitted at any time.

95.01 (A)(4) ***Clotheslines and drying yards.*** No clotheslines or drying yards or any other piece of equipment or thing upon which clothes or other articles can be hung or draped for drying purposes shall be erected, used, or permitted to remain anywhere visible from any adjacent Street.

95.01 (A)(5) ***Landscaping.*** All Landscaping, including without limitation Trees, Shrubs, Lawns, flower beds, walkways, and ground elevations, shall be maintained in a safe, neat, orderly, and attractive manner, including necessary Irrigation, consistent with the general appearance of the developed portions of the City. Trees and Shrubs shall be regularly Pruned to prevent obstruction of required sight distance triangles, Traffic Control Devices, and pedestrian clearance, and not be allowed to become overgrown. Lawns shall be mowed on a regular basis as necessary by the conditions. Bermuda grass shall be over seeded for the winter season to prevent dormancy. No weeds, underbrush, or other unsightly growths shall be permitted to grow or remain upon any part of the property and no Refuse pile or unsightly objects shall be allowed to be placed or suffered to remain on

any property. All Landscaping shall be maintained free from disease, pests, weeds, and Litter. Maintenance shall include, but not be limited to, weeding, watering, fertilizing, Pruning, mowing, edging, mulching, or and other maintenance, as needed. Dead and/or diseased plant material shall be removed and replaced with a suitable planting in a prompt manner. No vegetation shall be permitted to extend into the vehicle, pedestrian, or bicycle travel lanes, except for Tree canopies, which canopies must maintain height clearance for vehicular, pedestrian, and bicycle Traffic. The property Owner shall regularly maintain, repair, and replace, where necessary, all Landscaping features and Irrigation systems.

95.01 (A)(6) ***Garage doors.*** All garage doors shall be closed at all times when not being used for ingress/egress or cleaning.

95.01 (A)(7) ***Swimming pools.*** It shall be the duty and responsibility of every Person owning, leasing, or having any legal or equitable interest in any property in the City with a swimming pool to maintain the swimming pool at all times in a sanitary and safe condition, including the disinfection of all pool water pursuant to applicable health standards under State Law and Broward County ordinance, the removal of dirt, scum or floating matter, and the prevention of nesting and breeding of pests and vermin. Any safety features associated with the swimming pool that were required to be installed at the time of the construction of the pool pursuant to Florida Statutes and the Florida Building Code shall remain in good working order. The bottom of the pool shall be clearly visible to a Person standing on the pool deck. Swimming pools shall be maintained in a manner that prevents adverse affects on the economic welfare of adjacent properties.

95.01 (A)(8) ***Vacant or abandoned Structures.*** It shall be the duty and responsibility of every Person owning, leasing, or having any legal or equitable interest in any vacant or abandoned Structures in the City to maintain such property in a safe and secure manner that does not endanger the public health, safety and welfare of adjoining property Owners and residents. All windows, doors, garage doors and other access points of the vacant or abandoned Structures shall be secured in a manner that prevents unauthorized access to the property.

95.01 (A)(9) **Rights-Of-Way.** For those Rights-Of-Way within the City that are 80 feet or less in width, it shall be the duty of each Owner of property abutting such Rights-Of-Way to maintain the unpaved Swale portion of the Right-Of-Way in accordance with the standards set forth in this Code. Regardless of the width of the Right-Of-Way, all property Owners must maintain any portion of their driveway that is within the Right-Of-Way.

95.01 (A)(10) **Swale Areas.** No Person shall make any alteration or addition to Swale areas that would impede in any way the Swale's drainage function.

95.01 (B) ***Multi-family residential Developments and Association Properties.***

95.01 (B)(1) ***Intent.*** The intent of this subsection (B) is to insure that existing and future multi-family residential Developments meet minimum standards for maintenance. This subsection (B) shall not be construed so as to delete or decrease existing Code requirements regulating maintenance of multi-family residential Developments. The intent of this subsection (B) is to impose additional minimum maintenance standards upon those multi-

family residential Developments which were constructed prior to the adoption by the City of other Code provisions requiring maintenance of multi-family residential Developments as well as upon those multi-family residential Developments to be constructed in the future. The provisions of this subsection (B) shall apply only to Association Property within multi-family residential Developments.

95.01 (B)(2) ***Landscaping.*** The Homeowners' Association responsible for a multi-family residential Development must maintain all Landscaping, reflected on the most recent Landscaping plan approved by the City Commission for the Association Property, in a healthy, living condition. All plant material shall be kept Pruned in a safe, neat, tidy, and attractive manner to prevent obstruction of required sight distance triangles, Traffic Control Devices, and pedestrian clearance, and all turf areas shall be regularly mowed as necessary by weather conditions. All Landscaping shall be maintained free from disease, pests, weeds, and Litter. Maintenance shall include, but not be limited to, weeding, watering, fertilizing, Pruning, mowing, edging, mulching, or and other maintenance, as needed. Dead and/or diseased plant material shall be removed and replaced with a suitable planting in a prompt manner. Bermuda grass shall be over seeded for the winter season to prevent dormancy. The Homeowner's Association shall regularly maintain, repair, and replace, where necessary, all Landscaping features and Irrigation systems.

95.01 (B)(3) ***Obstructions to visibility.*** No obstruction to visibility at Street intersections or access easement intersections, or obstruction of Traffic Control Devices, either in the form of Landscaping or shrubbery or fence or other Structure, shall be permitted at any time.

95.01 (B)(4) ***Parking areas and drives; drainage.***

95.01 (B)(4)(a) ***Paved areas.*** The Homeowners' Association must maintain all paved areas reserved for parking and driving of Motor Vehicles, including driveway aprons, in a smooth condition, free from ruts, potholes, loose aggregate, and deterioration.

95.01 (B)(4)(b) ***Curbing and wheel stops.*** All curbing must be maintained free from cracks and deterioration by the Homeowners' Association. In those multi-family residential Developments in which wheel stops are required by other provisions of the City Code, said wheel stops must be maintained by the Owner free from cracks and deterioration. All wheel stops must remain affixed in those locations where such wheel stops were to be placed in accordance with approved site plans for the Development's parking area.

95.01 (B)(4)(c) ***Striping.*** The Homeowners' Association must stripe all paved areas reserved for vehicular parking and fire zones. Such striping shall be maintained in a manner free from peeling and shall be of sufficient contrast with the surface upon which such striping is placed so as to readily delineate to a Person of normal visual ability the location of a parking space or fire zone.

95.01 (B)(5) ***Traffic Control Devices.*** All Traffic Control Devices on properties owned by Homeowners' Associations shall comply with the United States Department of Transportation's *Manual on Uniform Traffic Control Devices* (MUTCD). The Homeowners'

Association shall also be responsible for the immediate repair and/or replacement of any Traffic Control Device that is damaged.

95.01 (B)(6) ***Drainage and Swale areas.*** The Homeowners' Association must maintain all Drainage Facilities in a manner allowing for the storm flow for which said facilities were designed, free from obstructions. All catch basin grates must be maintained in their original condition and must be replaced immediately, if damaged. No Person shall make any alteration or addition to Swale areas that would impede in any way with the Swale's drainage function.

95.01 (B)(7) ***General maintenance.*** The Homeowners' Association, on all Association Property within a multi-family residential Development, shall maintain all windows, Roofs, fences, Sidewalks, and masonry walls in a clean condition free from cracks greater than 1/16 of an inch in width, graffiti, peeling paint, mold, mildew, rust stains and missing materials. All surfaces, including Roofs, requiring painting or which are otherwise protected from the elements shall be kept painted or protected. Painted or stained surfaces shall be maintained with uniform colors, void of any evidence of deterioration. All fences or walls in a continuous line shall be uniform in color. All Roofs shall be kept free from equipment or materials that are not permanently affixed to a Roof, unless the equipment or materials are actively being used.

95.01 (B)(8) ***Temporary Structures, Trailers, and outbuildings.*** No Structure of a temporary character, including but not limited to a Trailer, shack, garage, barn, or other outbuilding, shall be permitted on any property. Notwithstanding the foregoing, tents are permitted for no more than 72 hours.

95.01 (B)(9) ***Clotheslines and drying yards.*** No clotheslines or drying yards or any other piece of equipment or thing upon which clothes or other articles can be hung or draped for drying purposes shall be erected, used, or permitted to remain anywhere visible from any adjacent Street.

95.01 (B)(10) ***Registration.*** Any and every Homeowners' Association created pursuant to Law within the corporate limits of the City shall register annually, on the first workday in April of each year, with the City Clerk. The following information shall be provided:

95.01 (B)(10)(a) The name, address, and telephone number of the president of the Homeowners' Association.

95.01 (B)(10)(b) The name, address, and telephone number of the registered agent of said Homeowners' Association.

95.01 (B)(10)(c) The name, address, telephone number, and appropriate representative of the management company, if any, with which the Association has contracted to perform their maintenance responsibilities.

95.01 (B)(11) ***Swimming pools.*** It shall be the duty and responsibility of every Person owning, leasing, or having any legal or equitable interest in any property in the City with a

swimming pool to maintain the swimming pool at all times in a sanitary and safe condition, including the disinfection of all pool water pursuant to applicable health standards under State Law and Broward County ordinance, the removal of dirt, scum or floating matter, and the prevention of nesting and breeding of pests and vermin. Any safety features associated with the swimming pool that were required to be installed at the time of the construction of the pool pursuant to Florida Statutes and the Florida Building Code shall remain in good working order. The bottom of the pool shall be clearly visible to a Person standing on the pool deck. Swimming pools shall be maintained in a manner that prevents adverse affects on the economic welfare of adjacent properties.

95.01 (B)(12) ***Vacant or abandoned Structures.*** It shall be the duty and responsibility of every Person owning, leasing, or having any legal or equitable interest in any vacant or abandoned Structures in the City to maintain such property in a safe and secure manner that does not endanger the public health, safety and welfare of adjoining property Owners and residents. All windows, doors, garage doors and other access points of the vacant or abandoned Structures shall be secured in a manner that prevents unauthorized access to the property.

95.01 (B)(13) **Rights-Of-Way.** For those Rights-of-Way within the City that are 80 feet or less in width, it shall be the duty of each Owner of property abutting such Rights-of-Way to maintain the unpaved Swale portion of the Right-Of-Way in accordance with the standards set forth in this Code. Regardless of the width of the Right-Of-Way, all property Owners must maintain any portion of their driveway that is within the Right-Of-Way.

95.01 (B)(14) ***Maintenance of privately owned fire hydrants, pump houses, backflow preventers, valves and lines.***

95.01 (B)(14)(a) ***Indian Trace Development District***

95.01 (B)(14)(a)(1) ***Annual Fire Hydrant Test.*** In October of each calendar year the Owner of the property on which a fire hydrant(s) is located that is connected to private water and/or fire lines shall have each fire hydrant flushed and tested by a Florida licensed general contractor. The Annual Fire Hydrant Test shall confirm that all components of each fire hydrant are fully operational and that each fire hydrant has a minimum flow rate of 1,250 gallons per minute. The property Owner shall furnish to the City the written Annual Fire Hydrant Test report signed by both the property Owner and the inspecting general contractor not later than October 31st of each calendar year. If a fire hydrant fails the Annual Fire Hydrant Test the property owner shall immediately notify the City, make the necessary repairs within 48 hours of failing the Annual Fire Hydrant Test, and re-test the fire hydrant upon completion of the repairs.

95.01 (B)(14) (a)(2) ***Out-of-service fire hydrants.*** If at any time a fire hydrant is inoperable, the property Owner shall immediately notify the City and immediately place a sign on the fire hydrant between the steamer valve and the valve cap stating "OUT OF SERVICE" in minimum of 2 ½ inch high blue reflective lettering on a white background.

95.01 (B)(14) (a) (3) ***Maintenance.***

95.01 (B)(14) (a)(3)(i) ***Clearance.*** The property Owner shall maintain a minimum clear area of 3 feet on all sides of each fire hydrant free of landscaping (except grass) and any other obstructions.

95.01 (B)(14) (a)(3)(ii) ***Pump House.*** The property Owner is responsible for the maintenance of the pump house, lines and fire hydrant from where the isolation valve connects to the public water supply.

95.01 (B)(14) (a)(3)(iii) ***Backflow Preventers.*** The property Owner is responsible for the maintenance of the backflow preventer, lines and fire hydrant from the water meter or last valve connecting to the public water supply before the backflow preventer.

95.01 (B)(14) (a)(3)(iv) ***Paint.*** The property Owner shall be responsible that all fire hydrants are painted "chrome yellow" color with high gloss finish, and such paint shall be maintained free of fading and peeling.

95.01 (B)(14)(b) ***Bonaventure Development District.*** All fire hydrants located in the Bonaventure Development District are owned and operated by the City of Sunrise and shall be maintained as set forth in the "Water Distribution Flushing Procedure" of the Administrative Policy from the Utilities Department for the City of Sunrise.

95.01 (C) ***Additional standards for properties not subject to a Homeowners Association.***

95.01 (C)(1) Fences that abut Public Rights-Of-Way shall be shadow box style, six feet in Height, and shall be natural wood or white PVC. Fences existing on August 20, 2001, which do not comply with this provision, may remain until they are replaced.

95.01 (C)(2) The Right-Of-Way side of fences that abut arterial Rights-Of-Way shall be maintained with a ficus Hedge that is kept in a neat and orderly condition.

95.01 (C)(3) If a Structure is damaged by fire or other casualty, its Owner shall properly and promptly restore it to at least as good a condition as it was before the casualty occurred.

§ 95.02 COMMERCIAL AND INDUSTRIAL/OFFICE DEVELOPMENTS; UNDEVELOPED LAND.

95.02 (A) ***Intent.*** The intent of this Section is to insure that existing and future commercial Developments meet minimum standards for commercial maintenance. This Section shall not be construed so as to delete or decrease existing Code requirements regulating maintenance of commercial Developments. Rather, the intent of this Section is to impose minimum commercial maintenance requirements upon those commercial Developments which existed prior to the adoption of City Code provisions requiring maintenance of commercial Developments. Additionally, the intent of this Section is to impose additional minimum maintenance standards upon those commercial Developments that were constructed following the adoption by the City of other Code provisions requiring maintenance of commercial Developments as well as upon those commercial Developments to be constructed in the future.

95.02 (B) ***Landscaping.*** The Owner of a commercial Development shall maintain all Landscaping, reflected on the most recent Landscaping plan approved by the City Commission for the Owner's commercial Development, in a healthy, living condition. All plant material shall be kept Pruned in a safe, neat, tidy, and attractive manner to prevent obstruction of required sight distance triangles, Traffic Control Devices, and pedestrian clearance, and all turf areas shall be regularly mowed as necessary by weather conditions. All Landscaping shall be maintained free from disease, pests, weeds, and Litter. Maintenance shall include, but not be limited to, weeding, watering, fertilizing, Pruning, mowing, edging, mulching, or and other maintenance, as needed. Dead and/or diseased plant material shall be removed and replaced with a suitable planting in a prompt manner. Bermuda grass shall be over seeded for the winter season to prevent dormancy. The Owner shall regularly maintain, repair, and replace, where necessary, all Landscaping features and Irrigation systems.

95.02 (C) ***Obstructions to visibility.*** No obstruction to visibility at Street intersections or access easement intersections, or obstruction of Traffic Control Devices, either in the form of Landscaping or shrubbery or fence or other Structure, shall be permitted at any time.

95.02 (D) ***Signs.***

95.02 (D)(1) ***Removal upon ceasing of operations.*** The Owner of any commercial property within which a business has been operating and upon which Signs have been placed must, within 30 days of said business's ceasing of operations, remove all Signs indicating what commercial activities had been occurring at said business.

95.02 (D)(2) ***Missing letters.*** The Owner of a commercial Development and/or a Tenant shall keep all Signs in good order with no missing, crooked, misplaced, faded, or damaged letters or other symbols or materials.

95.02 (E) ***Maintenance of undeveloped parcels.*** Owners of all undeveloped, unpaved parcels of real property within existing and future residential and commercial Developments shall ensure that vehicles of any kind be prohibited from parking upon said parcel. Vegetation on cleared lots shall not exceed six inches in height. Natural Lots shall be cleared a minimum of 25 feet from abutting Roadways and adjacent developed parcels. Vacant outparcels of partially developed sites, within 60 days of having received site plan approval, shall be seeded, all Construction Debris shall be removed, and vehicles of any kind shall be prohibited from parking upon said parcel.

95.02 (F) ***Potentially toxic materials.*** In addition to, and to the extent that this Section does not conflict with, Federal, State, or Broward County regulations, Owners of a commercial Development and/or Tenants of Buildings or Structures within commercial Developments in which potentially toxic materials are stored or utilized and are unattended must keep such potentially toxic materials and the attendant facilities for dispensing same, when not in use, in a secured area so as to prohibit public access.

95.02 (G) ***Parking areas and drives.***

95.02 (G)(1) ***Paved areas.*** The Owner of a commercial and/or industrial/office Development must maintain all paved areas reserved for parking and driving of Motor Vehicles in a smooth condition, free from ruts, potholes, loose aggregate, and deterioration.

95.02 (G)(2) ***Curbing and wheel stops.*** All curbing must be maintained free from cracks and deterioration by the Owner of a commercial and/or industrial/office Development. In those commercial and/or industrial/office Developments in which wheel stops are required by other provisions of the City Code, said wheel stops must be maintained by the Owner free from cracks and deterioration. All wheel stops must remain affixed in those locations where such wheel stops were to be placed in accordance with approved site plans for the commercial and/or industrial/office Development's parking area.

95.02 (G)(3) ***Striping.*** The Owner of any commercial and/or industrial/office Development must stripe all paved areas reserved for vehicular parking and fire zones. Such striping shall be maintained in a manner free from peeling and shall be of sufficient contrast with the surface upon which such striping is placed so as to readily delineate to a person of normal visual ability the location of a parking space or fire zone.

95.02 (H) ***Traffic Control Devices.*** All Traffic Control Devices on commercial and/or industrial/office Development shall comply with the United States Department of Transportation's *Manual on Uniform Traffic Control Devices* (MUTCD). The Owner of the commercial and/or industrial/office Development shall also be responsible for the immediate repair and/or replacement of any Traffic Control Device that is damaged.

95.02 (I) ***Drainage.*** The Owner of a commercial and/or industrial/office Development must maintain all Drainage Facilities in a manner allowing for the storm flow for which said facilities were designed, free from obstructions. All catch basin grates must be maintained in their original condition and must be replaced immediately, if damaged. No Person shall make any alteration or addition to Swale areas that would impede in any way with the Swale's drainage function.

95.02 (J) ***Paint color.*** For all commercial and industrial/office Developments, a minor site plan amendment shall be required prior to painting any portion of an exterior surface any color that is not shown on an approved site plan. If the previously approved site plan shows a paint color other than the proposed paint color, the site plan shall be amended to show the new color. If the site plan does not show any paint colors, the site plan shall be amended to show the proposed new color. The fee for a minor site plan amendment for a change in paint color, and the fee for the appeal of such decision to the City Commission, shall be set by resolution of the City Commission.

95.02 (K) ***General maintenance.*** The Owner, within Common Areas of a commercial and/or industrial/office Development and within areas of a commercial and/or industrial/office Development not occupied by a Tenant, shall maintain all windows, Roofs, fences, Sidewalks, and masonry walls in a clean condition free from cracks greater than 1/16 of an inch in width, graffiti, peeling paint, mold, mildew, rust stains, and missing materials. All surfaces, including Roofs, requiring painting or which are otherwise protected from the elements shall be kept painted or protected. Painted or stained surfaces shall be maintained with uniform colors, void of any

evidence of deterioration. All fences or walls in a continuous line shall be uniform in color. Further, the Owner and/or Tenant shall maintain all windows, Roofs, fences, and masonry walls free from cracks greater than 1/16 of an inch in width, graffiti, peeling paint, mold, mildew, rust stains, and missing materials within those Buildings or Structures occupied by a particular Tenant. All Roofs shall be kept free from equipment or materials that are not permanently affixed to a Roof, unless the equipment or materials are actively being used.

95.02 (L) ***Swimming pools.*** It shall be the duty and responsibility of every Person owning, leasing, or having any legal or equitable interest in any property in the City with a swimming pool to maintain the swimming pool at all times in a sanitary and safe condition, including the disinfection of all pool water pursuant to applicable health standards under State Law and Broward County ordinance, the removal of dirt, scum or floating matter, and the prevention of nesting and breeding of pests and vermin. Any safety features associated with the swimming pool that were required to be installed at the time of the construction of the pool pursuant to Florida Statutes and the Florida Building Code shall remain in good working order. The bottom of the pool shall be clearly visible to a person standing on the pool deck. Swimming pools shall be maintained in a manner that prevents adverse affects on the economic welfare of adjacent properties.

95.02 (M) ***Vacant or abandoned Structures.*** It shall be the duty and responsibility of every Person owning, leasing, or having any legal or equitable interest in any vacant or abandoned Structures in the City to maintain such property in a safe and secure manner that does not endanger the public health, safety and welfare of adjoining property Owners and residents. All windows, doors, garage doors and other access points of the vacant or abandoned Structures shall be secured in a manner that prevents unauthorized access to the property.

95.02 (N) ***Bridges.***

95.02 (N)(1) ***Inspection required.*** It shall be the duty and responsibility of every Person owning, leasing, or having any legal or equitable interest in any property in the City with a bridge to ensure that the bridge is suitable for its actual use, has a sufficient load rating and has and maintains structural integrity. Within six months of March 15, 2010 each bridge shall be inspected in accordance with AASHTO LRFD design procedures, by a Professional Engineer with an active registration in the State of Florida (with an area of expertise in structural design and evaluation), and each bridge shall be inspected every January of each even Year thereafter.

95.02 (N)(2) ***Inspection Report.***

95.02 (N)(2)(a)The initial report shall be sealed and submitted by a Professional Engineer and shall attest to the bridge's suitability for its actual use, to whether it has a sufficient load rating and to whether it has and maintains structural integrity. The initial report shall include deficiencies, if any, and recommendations to correct the deficiencies. If the Professional Engineer deems a bridge to be deficient and unsafe, the bridge shall be immediately closed, and signage shall be erected at the bridge site indicating that it is unsafe. The bridge shall remain closed until it is properly repaired and reinspected and deemed safe by the Professional Engineer in a final report, as described below. If the Professional Engineer deems a bridge to be safe but deficient, any deficiencies must be

corrected within 90 days of submission of the initial report. At the time of receipt of an initial report, a copy of the report shall be provided to the City.

95.02 (N)(2)(b) A final report shall be sealed and submitted by a Professional Engineer in situations wherein the initial report includes deficiencies and/or deems a bridge to be unsafe. At the time of receipt of a final report, a copy of the report shall be provided to the City.

95.02 (N)(3) ***Safety Standards***. All bridges located within golf courses within the City must at a minimum have an 8″x8″ curb at exterior edges sufficiently secured to the bridge to resist the impact of Golf Carts or light maintenance vehicles without failing and be rated for a 5 ton loading. Alternative curbing or vehicle containment methods may be used if signed and sealed by a Professional Engineer and if approved by the City.

95.02 (O) ***Maintenance of privately owned fire hydrants, pump houses, backflow preventers, valves and lines.***

95.02 (O)(1) ***Indian Trace Development District***

95.02 (O)(1)(a) ***Annual Fire Hydrant Test.*** In October of each calendar year the Owner of the property on which a fire hydrant(s) is located that is connected to private water and/or fire lines shall have each fire hydrant flushed and tested by a Florida licensed general contractor. The Annual Fire Hydrant Test shall confirm that all components of each fire hydrant are fully operational and that each fire hydrant has a minimum flow rate of 1,250 gallons per minute. The property Owner shall furnish to the City the written Annual Fire Hydrant Test report signed by both the property Owner and the inspecting general contractor not later than October 31st of each calendar year. If a fire hydrant fails the Annual Fire Hydrant Test the property Owner shall immediately notify the City, make the necessary repairs within 48 hours of failing the Annual Fire Hydrant Test, and re-test the fire hydrant upon completion of the repairs.

95.02 (O)(1)(b) ***Out-of-service fire hydrants.*** If at any time a fire hydrant is inoperable, the property Owner shall immediately notify the City and immediately place a sign on the fire hydrant between the steamer valve and the valve cap stating "OUT OF SERVICE" in minimum of 2 ½ inch high blue reflective lettering on a white background.

95.02 (O)(1)(c) ***Maintenance.***

95.02 (O)(1)(c)1. ***Clearance.*** The property Owner shall maintain a minimum clear area of 3 feet on all sides of each fire hydrant free of landscaping (except grass) and any other obstructions.

95.02 (O)(1)(c)2. ***Pump House.*** The property Owner is responsible for the maintenance of the pump house, lines and fire hydrant from where the isolation valve connects to the public water supply.

95.02 (O)(1)(c)3. ***Backflow Preventers.*** The property Owner is responsible for the maintenance of the backflow preventer, lines and fire hydrant from the water meter or last valve connecting to the public water supply before the backflow preventer.

95.02 (O)(1)(c)4. ***Paint.*** The property Owner shall be responsible that all fire hydrants are painted "chrome yellow" color with high gloss finish, and such paint shall be maintained free of fading and peeling.

95.02 (O)(2) ***Bonaventure Development District.*** All fire hydrants located in the Bonaventure Development District are owned and operated by the City of Sunrise and shall be maintained as set forth in the "Water Distribution Flushing Procedure" of the Administrative Policy from the Utilities Department for the City of Sunrise.

95.02 (P) **Rights-Of-Way.** For those Rights-Of-Way within the City that are 80 feet or less in width, it shall be the duty of each Owner of property abutting such Rights-of-Way to maintain the unpaved Swale portion of the Right-Of-Way in accordance with the standards set forth in this Code. Regardless of the width of the Right-Of-Way, all property Owners must maintain any portion of their driveway that is within the Right-Of-Way.

§ 95.03 SIDEWALK REPAIR AND REPLACEMENT.

95.03 (A) ***Sidewalks within the Private Rights-Of-Way.*** For Sidewalks within Private Rights-Of-Way, the Owner of the Sidewalk(s), and the property Owner abutting the Sidewalk(s), shall maintain the Sidewalk(s) in a safe condition, and shall repair and replace the Sidewalk(s) in accordance with the requirements of this Section.

95.03 (B) ***Repair.*** Sidewalks with vertical displacement greater than ¼" but less than ½" shall be repaired, or replaced in accordance with (C) below, and the source of Sidewalk displacement shall be remedied to prevent future displacement. Repairs to existing Sidewalks shall not require an engineering Permit.

95.03 (C) ***Replacement.*** Sidewalks with vertical displacement greater than ½" shall be replaced in accordance with the City's Engineering Standards. The source of the Sidewalk displacement shall be remedied to prevent future displacement. Replacement of existing Sidewalks shall require an engineering Permit from the City.

95.03 (D) ***Root removal.*** If the City determines that roots are the cause of a vertical displacement, the roots shall be removed and a root barrier shall be installed beside the Sidewalk to prevent further intrusion.

§ 95.04 ENCLOSURES.

All fences, garden walls, and similar enclosures shall meet the maintenance and appearance standards set forth in this Chapter.

§95.05 TEMPORARY OUTDOOR STORAGE CONTAINERS.

Notwithstanding the provisions of §124.57, a temporary outdoor storage container ("container") will be permitted on Private Property so long as it meets the following standards:

95.05 (A) The container shall not be allowed for a period in excess of 96 hours, nor more often than once in any 12-month period, unless on property that has a non-residential zoning designation and there is an active Building Permit in place;

95.05 (B) Notwithstanding the limitation contained in subsection (A) above, the 12-month period shall restart with each change of beneficial ownership of the property that is recorded in the public records;

95.05 (C) The container must be kept clean and in good condition, free of graffiti;

95.05 (D) The container shall not be any larger than eight feet wide, eight feet high and sixteen feet long and may not have wheels or any other device that raises it off of the ground;

95.05 (E) The container must be placed on a driveway or other paved surface if available; provided, however, if it must be placed on top of any grass or other Landscaped area, the area must be fully restored once the container has been removed;

95.05 (F) There shall not be more than one container on any parcel at the same time;

95.05 (G) No container, or any part thereof (including its doors when open) shall block the primary means of ingress and egress of any Building nor any Sidewalk or encroach into any Right-Of-Way;

95.05 (H) The container shall be locked when not actually being loaded or unloaded;

95.05 (I) No hazardous materials may be stored in any container;

95.05 (J) Any container shall bear a sign, no larger than two square feet in area, identifying the name, address and telephone number of the Owner of the container;

95.05 (K) Other than as provided in subsection (J), no signage is permitted on any container;

95.05 (L) The date that the container was dropped off must be clearly posted, in a weather resistant manner, on the container in an area no larger than one square foot; and

95.05 (M) Containers shall be removed immediately upon the issuance of an official Hurricane Watch by the appropriate governmental entity with the authority to issue a watch.

CHAPTER 96. LOST, UNCLAIMED OR ABANDONED PERSONAL PROPERTY.

§ 96.01 SEIZURE OF LOST, UNCLAIMED OR ABANDONED PERSONAL PROPERTY.

The City shall seize and reduce to its possession any lost, captured, abandoned or stolen personal property that may be found upon any of the public Streets and highways of the City and shall restore such property as provided herein.

§ 96.02 NOTICE.

96.02 (A) ***Notice form.*** Whenever the City ascertains that any lost, captured, abandoned or stolen personal property is present on Public Property or on Private Property contrary to this Chapter, he or she may cause a notice to be placed upon such personal property in substantially the following form:

NOTICE TO THE OWNER AND ALL PERSONS INTERESTED IN THE ATTACHED PROPERTY. THIS PROPERTY, TO WIT:

(Setting forth brief description)

LOCATED AT

(Setting forth brief description)

IS

96.02 (A)(1) Unlawfully upon Public Property at (setting forth brief description of location)

OR

96.02 (A)(2) Improperly stored and is in violation the provisions of Chapter 96 of the Code of Ordinances of the City of Weston, and

MUST BE REMOVED WITHIN 5 DAYS FROM THE DATE OF THIS NOTICE; OTHERWISE IT SHALL BE PRESUMED TO BE ABANDONED AND WILL BE REMOVED AND DISPOSED OF PURSUANT TO CHAPTER 705, FLORIDA STATUTES, AND CHAPTER 96 OF THE CODE OF ORDINANCES OF THE CITY OF WESTON. THE OWNER WILL BE LIABLE FOR THE COSTS OF REMOVAL, STORAGE, DESTRUCTION AND PUBLICATION OF NOTICE.

96.02 (B) Such notice shall be not less than eight inches by ten inches and shall be sufficiently weatherproof to withstand normal exposure to the elements.

96.02 (C) If the lost or abandoned personal property is located on Private Property, the City may request in writing of the Owner of the Private Property to remove the personal property from the real property, or reduce the personal property to the possession of the City.

§ 96.03 REMOVAL BY CITY.

If, at the end of five days after the posting of notice, the Owner or any Person interested in the abandoned or lost personal property described in such notice has not removed the property from the public or Private Property, or shown reasonable cause for failure to do so, then the City may cause the abandoned property to be removed and either stored or destroyed.

§ 96.04 REDEMPTION OF PROPERTY.

If the City determines that the lost or abandoned property has sufficient value to justify its storage, the Owner of the personal property may regain possession of the property from the City upon paying to the City all costs of removal, plus storage charges of said property while in possession of the City, plus all fines imposed upon the Owner for violation of this Chapter.

§ 96.05 DESTRUCTION OF PROPERTY.

If the City determines that the abandoned property should be destroyed, the Owner will be notified by certified mail and the property may be destroyed 30 days thereafter. The value, if any, of such abandoned property that is destroyed as authorized by this Chapter shall be retained by the City to be applied against the costs associated with the removal of the property, unless the costs of removal are paid by the Owner as provided in § 96.06, in which case the value may be deposited in the City's General Fund.

§ 96.06 COSTS AND PENALTIES.

The Owner of any lost or abandoned personal property who, after being given notice as provided in this Chapter, does not remove the personal property within the specified period, shall be liable to the City for all costs associated with the removal, storage, and/or destruction of such property, less any salvage value received by the City, if any. Upon such removal, the City shall notify the Owner of the amount owed and of the penalty provisions within Chapter 31 of the Code.

§ 96.07 DISPOSITION OF PROCEEDS OF UNREDEEMED PROPERTY.

If no claim for the personal property is made within two months after receipt thereof, the City may sell said property for the best price obtainable as junk or otherwise, and the proceeds shall be available to pay the reasonable charges for the expenses incurred in the processing, storage and disposal of the property by the City, and any remaining balance shall be paid into the General Fund.

ABANDONED AND JUNK VEHICLES

§ 96.10 STORAGE OF ABANDONED VEHICLES AND VESSELS.

96.10 (A) ***Abandoned vehicles***. No Person shall store, keep, or permit to be stored or kept, an Abandoned vehicle or Vessel in plain view upon Public or Private Property.

96.10 (B) ***Storage in enclosed Building.*** The following shall be stored within a completely enclosed Building:

96.10 (B)(1) All wrecked, junked, dismantled or partially dismantled vehicles, Vessels or Trailers, including vehicles missing major parts, including but not limited to, bodies, engines, transmissions and bumpers; and

96.10 (B)(2) All vehicles, Vessels and Trailers with bodies, engines, transmissions, rear ends or other major components that are wrecked, ruined or damaged to an extent that would render the vehicle, Vessel or Trailer inoperative.

§ 96.11 REMOVAL PROCEDURE.

96.11 (A) ***Effect of provisions.*** The rights, powers, and procedures set forth in this Section shall be supplemental to and cumulative to the rights, powers, and procedures set forth elsewhere in this subchapter, the City Code, or State statute.

96.11 (B) ***Notice form.***

96.11 (B)(1) Whenever the Enforcement Officer ascertains that an Abandoned vehicle or Vessel is present on Public Property or on Private Property contrary to this Chapter, he or she may place a notice upon such Abandoned vehicle or Vessel in substantially the following form:

NOTICE TO THE OWNER AND ALL PERSONS INTERESTED IN THE ATTACHED PROPERTY. THIS PROPERTY, TO WIT:

(Setting forth brief description)

LOCATED AT

(Setting forth brief description)

IS:

(a) Unlawfully upon Public Property at (setting forth brief description of location)

OR

(b) Improperly stored and is in violation of the provisions of Chapter 705, Florida Statutes, and/or City Code Chapter 96.

MUST BE REMOVED WITHIN 5 DAYS FROM THE DATE OF THIS NOTICE; OTHERWISE IT SHALL BE PRESUMED TO BE ABANDONED AND WILL BE REMOVED AND DISPOSED OF PURSUANT TO CHAPTER 705, FLORIDA STATUTES. THE OWNER WILL BE LIABLE FOR THE COSTS OF REMOVAL, STORAGE, DESTRUCTION, AND PUBLICATION OF NOTICE.

If the property is a Motor Vehicle or Vessel, the Owner will be liable for the costs of removal and destruction and the hearing before the Special Magistrate for the City, if such a hearing is requested by the property Owner. The Person to whom this notice is directed or their duly authorized agents may file a written request for a hearing before the Special Magistrate for the City within five days after service of this notice for the purpose of showing that the violation does not exist, or why such violation should not be remedied by the City at the expense of such persons. Dated this: (setting forth the date of posting of notice). Signed: (setting forth name, title, address, and telephone number of the Enforcement Officer).

96.11 (B)(2) Such notice shall be not less than eight inches by ten inches and shall be sufficiently weatherproof to withstand normal exposure to the elements.

96.11 (C) ***Notice to vehicle or Vessel Owner.*** The Enforcement Officer shall also make a reasonable effort to ascertain the name and address of the Owner of the Abandoned vehicle or Vessel. If such address is reasonably available to the Enforcement Officer, he or she shall mail a copy of such notice to the Owner on or before the date of posting. The Enforcement Officer shall contact the Department of Highway Safety and Motor Vehicles and/or the Department of Environmental Protection in order to determine the name and address of the Owner and any Person who has filed a lien on the vehicle or Vessel in accordance with Florida Statutes. Upon receipt of this information, the law enforcement agency shall mail a copy of the notice by certified mail, return receipt requested, to the Owner and to the lienholder, if any.

96.11 (D) ***Notice to real property Owner.*** If the Abandoned property is located on Private Property, the Enforcement Officer shall mail a copy of the notice to the Owner of the real property upon which the Abandoned property is located as shown by the real estate tax rolls of Broward County on or before the date of posting such notice.

96.11 (E) ***Removal by Enforcement Officer.*** If, at the end of five days after the posting of such notice, or the pre-taking hearing before the Special Magistrate for the City, whichever occurs later, the Owner or any Person interested in the Abandoned property described in such notice has not removed the Abandoned property from public or Private Property, or shown reasonable cause for failure to do so, then the Enforcement Officer may cause the Abandoned property to be removed and either stored or destroyed.

96.11 (F) ***Redemption of property.*** If the Enforcement Officer determines that the Abandoned property has sufficient value to justify its storage, the Owner of the property may regain possession of the property from the City by making application within two months after receiving notice from the City as provided for above and upon paying to the City all costs of removal, plus storage charges of said property while in possession of the City, plus all fines imposed upon the Owner for violation of this subchapter.

96.11 (G) ***Destruction of property.*** If the Enforcement Officer determines that the Abandoned property should be destroyed, the Owner will be notified by certified mail and the property may be destroyed 30 days thereafter. The value, if any, of such Abandoned property that is destroyed as authorized by this subchapter shall be retained by the City to be applied against the costs associated with the removal of the property, unless the costs of removal are paid by the

Owner as provided in subsection (F), in which case the value may be deposited in the City's General Fund.

96.11 (H) ***Disposition of proceeds of unredeemed property.*** If no claim for the property is made within two months after receipt thereof, the City may sell said property for the best price obtainable as junk or otherwise, and the proceeds shall be available to pay the reasonable charges for the expenses incurred in the processing, storage, and disposal of the property by the City, and any remaining balance shall be paid into the General Fund.

96.11 (I) ***Abandoned vehicle - hazardous.*** If an Enforcement Officer ascertains that an Abandoned vehicle presents an immediate or imminent threat or hazard to Traffic, Persons or surrounding property, he or she may have the vehicle removed to a location to be designated for such purpose by the City.

TITLE X: PUBLIC PARKS, RECREATION AND SPECIAL EVENTS

CHAPTER 100. PUBLIC PARKS, RECREATION AND SPECIAL EVENTS.

§ 100.01 HOURS OF OPERATION.

100.01 (A) ***Hours of operation.*** The City Manager shall designate the hours of operation of each Public Park and Recreational Facility. The hours of operation shall be clearly posted at each facility. The City Manager may extend or shorten these hours for any Public Park or portion thereof. Public Parks open beyond sunset and having lighted facilities shall be open for use during the time such lights are illuminated, and upon cessation of such illumination, the facilities shall be considered closed. No Person shall enter or remain in any Public Park after Public Park closing hours without authorization by the City Manager.

100.01 (B) ***Closure of Public Park.*** Any Public Park or Recreational Facility, or portion thereof, may be closed to the public by the City Manager at any time and for any interval of time.

§ 100.02 PROHIBITED ACTIVITIES.

100.02 (A) ***Firearms and other dangerous instruments.*** No Person, other than an authorized City employee or Law Enforcement Officer, shall bring into any Public Park or Recreational Facility, any firearm, air gun, pellet gun, spring gun, ammunition, explosive, fireworks, sling shot, cross bow, bow and arrow, or any other device by means of which a projectile can be propelled or any other similar device or substance that may cause injury or property damage, or any flammable liquid, other than that used for the purpose of a barbecue or that which is contained within a fuel tank of a Motor Vehicle, except to the extent required to be permitted by State Law.

100.02 (B) ***Glass containers.*** Glass containers of any kind are not permitted within a Public Park.

100.02 (C) ***Bicycles, roller skates, skateboards.*** Bicycles, roller blades, roller skates, and skateboards are prohibited on all basketball and tennis courts.

100.02 (D) ***Golf.*** The playing, practicing, and use of golf clubs and related equipment associated with the game of golf in Public Parks is prohibited.

100.02 (E) ***Alcoholic Beverages.*** No Person shall bring into, possess, consume, or sell Alcoholic Beverages in any Public Park or Recreational Facility, unless a valid permit is issued by the City that authorizes a special event to include the distribution and consumption of Alcoholic Beverages.

100.02 (F) ***Fires.*** No Person shall start or maintain any outdoor fire except in designated areas. Fires shall be limited to cooking on picnic grills. No ground fires are permitted. No Person starting or maintaining any fire in a Public Park shall leave the area without first extinguishing the fire with water.

100.02 (G) ***Feeding of wildlife.*** The feeding of wildlife in any Public Park area or Recreational Facility is prohibited.

100.02 (H) ***Release of Animals.*** The release of any Animal is prohibited in Public Parks or Recreational Facilities.

100.02 (I) ***Sale of goods or services.*** No Person shall sell or offer for sale any goods or services within any Public Park or Recreational Facility unless authorized by the City Manager.

100.02 (J) ***Advertising.*** No advertising or publicity shall be posted or announced in or on Public Park or Recreational Facility property unless authorized by the City Manager.

100.02 (K) ***Overnight stays.*** No overnight stays are allowed in Public Parks or Recreational Facilities without an event permit.

100.02 (L) ***Dangerous objects.*** No activities shall take place in any Public Park or Recreational Facility involving the use of arrows, javelins, model airplanes, rockets, or any other dangerous equipment.

100.02 (M) ***Private instruction.*** In order to assure access to City facilities for all residents and to avoid any Person from monopolizing the available facilities, no Person may conduct any activity such as lessons, classes or training for a particular sport or activity that charges a fee at any Public Park or Recreational Facility without first entering into a written agreement with the City.

100.02 (N) ***Organized sports***. The playing of organized games in Public Parks or Recreational Facilities, including but not limited to soccer, football, roller hockey, and baseball, is prohibited, except on fields, courts, or areas so designated by the City Manager.

100.02 (O) ***Mechanical rides***. Mechanical rides are prohibited in all Public Parks or Recreational Facilities.

100.02 (P) ***Carnivals***. Carnivals are prohibited in Public Parks and Recreational Facilities.

100.02 (Q) ***Property damage.*** No Person shall damage, deface, or destroy any property located within a Public Park or Recreational Facility. In the event damage occurs, the City may repair the damaged property and collect the City's incurred costs from the Person responsible for the damage.

100.02 (R) ***Vegetation***. No Person shall willfully dig in, disturb, pick, saw, chop, cut, carve, remove, or injure any grassy areas, flowers, seeds, blooms, bark, branches, twigs, or leaves of any Tree, plant, Shrub, Vine, bush, or any other vegetation on City property without authorization by the City Manager.

100.02 (S) ***Receptacles.*** No Person shall willfully bring in or dump, deposit, or leave any bottles, broken glass, ashes, paper, boxes, cans, dirt, Rubbish, waste, Garbage, or Refuse, or other Trash; but shall place same in the proper receptacles when these are provided; when receptacles are not so provided, all such Rubbish or waste shall be carried away from City property by the Person responsible for its presence, and properly disposed of elsewhere.

100.02 (T) ***Construction.*** No Person shall construct, or cause to be constructed, any Building, Structure, or improvement of any kind, whether permanent or temporary, on City property without written authorization from the City Manager and any applicable Building Permits that may be required by the Building Code.

100.02 (U) ***Vehicles and Vessels.*** No Person shall repair, maintain, wash, or wax any vehicle or Vessel on City property without authorization by the City Manager.

100.02 (V) ***Fireworks.*** No Person shall use fireworks within a Public Park or Recreational Facility.

100.02 (W) ***Animals.*** No Person shall bring Animals into any Public Park or Recreational Facility, except for domestic Animals in areas that are clearly marked by Signs permitting domestic Animals. Any Person bringing domestic Animals in Public Park or Recreational Facility permitted areas shall keep the Animals on a leash, within six feet of the leash handle and shall remove the Animals' fecal matter from the Public Park or Recreational Facility. Animals used by law enforcement or service dogs necessary to aid individuals with physical disabilities shall be exempt from this Section.

§ 100.03 TRAFFIC AND MOTOR VEHICLES IN PUBLIC PARKS.

All applicable provisions of Laws and rules regulating the equipment and operation of Motor Vehicles on State and local roads will be strictly enforced in the Public Parks, together with such rules provided in this Chapter:

100.03 (A) No Person shall operate a vehicle in a Public Park except upon designated paved or improved Public Park roads or driveways, or else in and upon designated areas set aside for such use by vehicles, except as authorized by the City Manager.

100.03 (B) No Person shall operate a vehicle within any Public Park or at any Recreational Facility in excess of 10 miles per hour, except upon those roads or driveways where official Signs or markings designate a different speed limit.

100.03 (C) No Person shall operate any motorized device including, but not limited to, go-peds, go-carts, scooters, or motorbikes not regulated by State Law. This prohibition shall not apply to motorized devices used by disabled Persons or Public Park maintenance personnel.

100.03 (D) No Person shall Park a vehicle on Public Park property other than in areas designated for parking, except in the event of an Emergency or unless directed to do otherwise by City staff or Enforcement Officers.

100.03 (E) No vehicle shall be left parked on Public Park property after Public Park closing hours without obtaining written permission from the City Manager.

PUBLIC PROPERTY

§ 100.04 PERMITS AND FEES; USE OF PUBLIC PARKS AND RECREATION FACILITIES.

100.04 (A) ***Rules and regulations***. The City Manager may, from time to time, establish rules and regulations for the use of each Public Park and Recreational Facility and for obtaining permits pursuant to this Section. Any Person seeking a permit to use any Public Park or Recreation Facility shall comply with the City's rules and regulations.

100.04 (B) ***Activities that do not require a permit***. Except as provided in this Section, all Public Parks may be used by members of the general public, without a permit, for recreational purposes consistent with the rules and nature of the Public Park, the safety of the public and of Public Park property, the Code and the comprehensive plan.

100.04 (C) ***Activities that require a private use permit***. Private use permits may be issued for the activities described in this subsection. Such activities are generally of a private nature, involving less than 50 Persons and not open to the public. All activities or facilities covered by such permits shall be made accessible at reasonable times for inspection by the City. Private use permit holders shall be responsible for maintaining the facility consistent with the conditions outlined in the permit and shall return the facility to its original condition prior to the permit holder's departure. The permit holder shall be liable for any loss, damage or injury to any Person or property arising out of the use of the City facility by the permit holder or permit holder's guests, family members, invitees, employees, independent contractors or other agents. The permit holder shall be required to reimburse the City for maintenance, repair or cleanup costs sustained by the City in restoring the facility to its original condition. Private use permit fees shall be set forth by resolution of the City Commission.

100.04 (C)(1) ***Athletic facilities***. The use of athletic fields for games and practice must be scheduled in advance by obtaining an athletic facilities use permit from the City Manager. Athletic facilities use permits for Use at athletic facilities may allow use for numerous days and time periods.

100.04 (C)(2) ***Picnic areas and use***. Picnic areas shall be available upon a "first come, first served" basis, except that Persons who obtain a picnic area use permit from the City Manager shall be entitled to exclusive Use of such picnic area for the date and time specified on the permit.

100.04 (C)(3) ***Indoor Recreational Facilities***. Use of indoor Recreational Facilities for any organized gathering or event shall require an indoor Recreational Facilities use permit from the City Manager.

100.04 (D) ***Public Property event permits.***

100.04 (D)(1) A Public Property event permit is required for the following actions upon Public Property:

100.04 (D)(1)(a) any event, meeting, activity, gathering, or group of Persons, having a common purpose, design or goal upon any public facility, Public Right-Of-Way or Public Park that is attended by or anticipated to be attended by 50 or more Persons;

100.04 (D)(1)(b) any exhibit, music or dramatic performance, fair, concert, play, radio or television broadcast, other than a news transmission in such a manner that interferes with the use and enjoyment by another Person;

100.04 (D)(1)(c) the exhibition or display of any motion picture or television program in such a manner that interferes with the use and enjoyment by another Person, light or laser light display, or similar event;

100.04 (D)(1)(d) create or emit any amplified sound, except from a radio, recorder or other device possessed and used by an individual for his or her own enjoyment and operated in such a manner so as not to interfere with the use and enjoyment by another Person;

100.04 (D)(1)(e) station or erect any Building, tent, canopy, stand, bandstand, stage, tower, scaffold, sound stage, platform, rostrum or other Structure;

100.04 (D)(1)(f) station or use any electrical or electronic device or equipment that would require outdoor auxiliary power;

100.04 (D)(1)(g) bring, land or cause to ascend or descend or alight within any Public Park, any airplane, helicopter, flying machine, balloon, parachute or other apparatus for aviation;

100.04 (D)(1)(h) film a media broadcast (other than a news transmission), motion picture or still commercial photography for any purpose other than for a personal use that does not interfere with the use and enjoyment by another Person.

100.04 (E) ***Concessions.*** Except for concession Owners or operators that have contracted with the City to operate multiple concession stands, all concession facilities and operators must obtain a concession permit from the City Manager. Prior to applying or receiving a permit from the City Manager, the concession facilities and operators shall comply with all codes, including but not limited to building codes, health and sanitation codes, food service codes, sales and use tax laws, and insurance requirements as determined by the City and shall have all such clearances and operating licenses or permits available for inspection by the City. If the operator is not the Owner of the concession facility, both the operator and the facility must each have a permit from the City.

100.04 (F) ***Noise.*** The activities that require a private use permit or a special Public Property event permit shall be governed by the noise regulations of Chapter 52 of the Code. Additionally, the activities may be subject to specific limitations on noise in accordance with Chapter 52 of this Code and as set forth in the permit, violations of which shall constitute grounds for immediate revocation of the permit.

100.04 (G) ***Exemptions.*** This Section shall not apply to City events or to any Person that has entered into a service agreement with the City for an event.

§ 100.05 CLOSURE OF PUBLIC FACILITIES.

As a result of certain circumstances, including but not limited to inclement weather or damage to public facilities, the City Manager may close Public Property in accordance with consideration for public safety and maintenance.

PRIVATE PROPERTY

§ 100.06 PERMITS AND FEES; PRIVATE PROPERTY.

100.06 (A) ***Activities that require a Private Property event permit***. The City shall require a special event permit for any event, meeting, activity, gathering, or assembly of a group of Persons, having a common purpose, design or goal, held upon any Private Property in a non-Residential Area, where the event substantially inhibits the usual flow of pedestrian or vehicular Traffic on the surrounding Public Property, including but not limited to Streets, Sidewalks, alleys, and Public Parks, or preempts use by the general public, anticipated to attract 50 or more Persons.

100.06 (A)(1) The maximum duration of such events shall be three days. An event shall include but not be limited to festivals, Carnivals, concerts, parades, walks, races, fundraising sales and similar gatherings, grand opening promotions, City co-sponsored events and other similar events not specifically permitted by City ordinance.

100.06 (A)(2) Events held on Private Property, having no impact on Public Property or the public as described in this subsection, that include a tent or any other temporarily erected Structure, shall require the proper Building Permit.

100.06 (B) ***Limitations on special Private Property events***.

100.06 (B)(1) ***Mechanical rides***. All mechanical rides are prohibited at special Private Property events.

100.06 (B)(2) ***Carnivals***. Privately owned, profit-oriented Carnivals are prohibited at special Private Property events if they are not intended to directly benefit local educational, charitable, rehabilitative, recreational, or religious organizations consisting largely of resident citizens of the City, where any profits realized are to be channeled into local religious, charitable, educational, rehabilitative, or recreational usage of direct benefit and impact to the citizens of the City.

100.06 (B)(3) ***Recreational vehicles.*** If recreational vehicles are to be utilized in connection with an event, a parking plan for such recreational vehicles shall be required. The plan shall be subject to City approval, which shall be in the sole discretion of the City Manager. The number of recreational vehicles that may be parked shall be limited to a reasonable amount and duration. A proper plan of sanitary disposal, in compliance with Florida Statutes § 513.08, and all other applicable Law, shall be required. The parking of

recreational vehicles shall be in compliance with the City's parking regulations and they shall not obstruct Traffic.

100.06 (B)(4) ***Portable lighting.*** If a portable lighting system is to be utilized for an event, a plan for the usage of such portable lighting system shall be required. The plan shall be subject to City approval, which shall be in the sole discretion of the City Manager. The portable lighting system shall not adversely affect the neighboring properties and shall be consistent with the applicable provisions in §124.55 of this Code.

100.06 (C) ***Seasonal Sales Permits***.

100.06 (C)(1) Seasonal sales permits may be issued to an Applicant for special seasonal sales activities that are conducted for a period not to exceed 30 calendar days in length conducted on Private Property.

100.06 (C)(2) General criteria and limitations for seasonal sales permits shall be as follows:

100.06 (C)(2)(a) The activity must be compatible with the existing surrounding land Uses, the Zoning Chapter and the comprehensive plan; no seasonal sales permits shall be issued for events in areas zoned for Single-Family residential.

100.06 (C)(2)(b) No seasonal sales permit shall be approved when a merchant exists who deals in the goods offered by the temporary use and whose principal business is located within the same center or within 300 feet of the proposed location of the temporary use.

100.06 (C)(2)(c) If Off-Site parking is to be utilized, permission must be in writing from the Owner of said property.

100.06 (C)(2)(d) An Applicant may not receive a seasonal sales permit more than three times within a Year, unless approved by the City Manager.

100.06 (C)(2)(e) No more than two seasonal sales permits may be issued at one period of time, unless approved by the City Manager.

100.06 (C)(2)(f) An Applicant must submit an affidavit that permission has been secured from the Owner of the land upon which the seasonal sale is to be held.

100.06 (C)(2)(g) If recreational vehicles are to be utilized in connection with a seasonal sales activity, a parking plan for such recreational vehicles shall be required. The plan shall be subject to City approval, which shall be in the sole discretion of the City Manager. The number of recreational vehicles that may be parked shall be limited to a reasonable amount and duration. A proper plan of sanitary disposal, in compliance with Florida Statues § 513.08, and all other applicable Law shall be required. The parking of recreational vehicles shall be in compliance with the City's parking regulations and they shall not obstruct Traffic.

100.06 (C)(2)(h) If a portable lighting system is to be utilized for a seasonal sales activity, a plan for the usage of such portable lighting system shall be required. The plan shall be subject to City approval, which shall be in the sole discretion of the City Manager. The portable lighting system shall not adversely affect the neighboring properties and shall be consistent with the applicable provisions of § 124.55 of this Code.

100.06 (D) ***Permit Procedures***. The permit procedures applicable to special event and seasonal sales activities on Private Property are set forth in this Chapter 100.

100.06 (E) ***Building Permits.*** All applicable Building Permits shall be obtained.

100.06 (F) ***Noise.*** The activities that require a special Private Property event permit or a seasonal sales permit shall be governed by the noise regulations in Chapter 52 of the Code. Additionally, the activities may be subject to additional specific limitations on noise as set forth in the permit, violations of which shall constitute grounds for immediate revocation of the permit by the City Manager.

100.07 EVENT PERMIT PROCEDURES.

100.07 (A) ***Application Form***. An Applicant for a private use, seasonal sales use, or special event (public and non-residential Private Property) permit shall apply to the City Manager for such permit by filing a written application, with the required documentation and fees.

100.07 (A)(1) ***Filing Deadline***. Applications shall be submitted to the City Manager no later than 30 days prior to the scheduled date of the event. For events occurring on Private Property, the Applicant shall be the property Owner. Notwithstanding the foregoing, the City Manager may, upon a showing of good cause, waive the 30 day requirement for time sensitive events, provided that:

100.07 (A)(1)(a) the Applicant waives his or her right to appeal or agrees that the scheduled event will need to be postponed due to the appeal process timeframes set forth in this Section; and

100.07 (A)(1)(b) the City can properly prepare for the event with reduced notification.

100.07 (A)(2) ***Required Information***. The application for any of the above described permits may include but is not limited to the following information:

100.07 (A)(2)(a) The names and addresses of all Persons who will in fact be promoting, holding, and/or operating the event;

100.07 (A)(2)(b) The type of event;

100.07 (A)(2)(c) Disclosure of extraordinary uses;

100.07 (A)(2)(d) Disclosure of the intent to serve Alcoholic Beverages;

100.07 (A)(2)(e) The beneficiary of the event, if a charitable event;

100.07 (A)(2)(f) The exact date(s) and times the event will be held and the times when any music or other outdoor activity, exhibition or special event, show, or performance will occur;

100.07 (A)(2)(g) The estimated number of performers and participants in the event and the estimated number of spectators who will witness the event;

100.07 (A)(2)(h) The exact location where the event will be held, including the necessity of Street closures and parking requirements;

100.07 (A)(2)(i) The number and type of sanitary facilities available for use by the performers, participants, and spectators;

100.07 (A)(2)(j) The police and fire protection facilities and equipment available;

100.07 (A)(2)(k) The plan for Traffic management in the area where the event shall be held;

100.07 (A)(2)(l) The plan for crowd management at the event;

100.07 (A)(2)(m) A projected financial statement for the event consisting of a projected balance sheet, projected income statement, and a statement of changes in the financial position certified by a certified public accountant;

100.07 (A)(2)(n) The Garbage and waste facilities and waste disposal facilities, including mandatory Recycling, for participants and spectators upon the Premises where the event will be held and the plan for waste disposal;

100.07 (A)(2)(o) Comments from the City's Police, Fire and Building Departments concerning public safety, Traffic and parking;

100.07 (A)(2)(p) A hold harmless agreement on an approved City form;

100.07 (A)(2)(q) A certificate of insurance naming the City, its officers, agents, servants, and employees as additional insured's, with minimum general liability limits of $2,000,000 for general aggregate and products; $1,000,000 personal injury per occurrence; $50,000 fire damage; $1,000,000 single limit automobile liability; and $1,000,000 excess liability. Proof of insurance for all vendors, contractors, and subcontractors shall also be required in the above amounts. The certificate shall also provide that the insurer shall give the City reasonable notice of insurer's intent to cancel the insurance coverage provided;

100.07 (A)(2)(r) A plan for limited parking of recreational vehicles that shall be utilized for the event, if applicable, specifying the proposed location, number, size, duration and method of Sewage disposal.

100.07 (A)(2)(s) Description of any portable lighting system that shall be utilized for the event, if applicable.

100.07 (A)(3) ***Application Fee.*** No application for an event permit shall be considered unless the Applicant shall have paid at the time for filing an application for permit the required non-refundable permit application fee, and cost recovery in an amount in accordance with the schedule of fees to be established by resolution. The collected permit fee shall be used to defray the costs of the investigations required.

100.07 (A)(4) ***Security Deposit.*** No permit shall be issued unless the Applicant has paid, within the time prescribed by the City Manager, the security deposit in an amount in accordance with the schedule of fees set by resolution. The amount of the security deposit set forth in the schedule of fees shall be equal to the estimated cost of policing, cleaning up, and restoring the event site upon the conclusion of the use or activity. Promptly after the conclusion of a permit activity, the City shall inspect the Premises and equipment used by the permittee.

100.07 (A)(4)(a) If it is determined that there has been no damage to City property or equipment beyond reasonable wear and tear, the security deposit shall be refunded in full within 30 days of the conclusion of the permitted event.

100.07 (A)(4)(b) If it is determined by such inspection, that the permitted event proximately caused damage to City property in excess of normal wear and tear and that requires repairs in excess of routine maintenance, or determined that fines should be assessed against the permittee pursuant to this Section, the City shall retain the security deposit or any portion thereof, necessary to pay for the cost of repair or any fines assessed against the permittee. The City Manager shall given written notice of the assessment of damages or fine and retention of the security deposit to the permittee by personal delivery or by United States mail, with proper postage prepaid to the name and address set forth in the application for permit. Any assessment of damages or fines in excess of the security deposit shall be paid to the City within 30 days after notice of such assessment of damages or fine is sent. If the permittee fails to pay the total amount due to the City within the time prescribed above, the permittee shall be assessed a late payment fee of the greater of $50.00 per day or 1% of the total amount of the bill per day for each additional day that the bill for such costs remain unpaid.

100.07 (A)(5) ***User Fees***. No permit shall be issued unless the Applicant has paid, within the time prescribed by the City Manager, a user fee and any other required fee in an amount in accordance with the schedule of fees set by resolution. No permit shall be issued unless all required fees are paid as specified in this Section.

100.07 (A)(6) ***Special Conditions.*** The City Manager may impose certain conditions relating to an event that shall be reflected on the permit. The conditions may include, but not limited to, limitations on noise, lighting intensity and hours, violations of which shall constitute grounds for immediate revocation of the permit by the City Manager. In addition to compliance with the conditions, the permit holder shall be in compliance with all applicable Laws and codes. Failure to comply with all applicable Laws and codes shall also constitute grounds for immediate revocation of the permit by the City Manager.

100.07 (A)(7) ***Contact Information.*** The permit holder, or designated representative of the permit holder, shall be present at the event at all times (including set-up, take down and clean-up), and shall provide the City Manager with a contact cellular telephone number where the permit holder or designated representative of the permit holder may be contacted at all times during the event and within 24 hours thereafter. The permit holder or designated representative shall keep the permit on the site of the event at all times. Failure to keep the permit on the site of the event shall also constitute grounds for immediate revocation of the permit by the City Manager.

100.07 (B) ***Permits not transferable***. No permit may be transferred.

100.07 (C) ***Processing of application***.

100.07 (C)(1) ***Order***. Applications for permits shall be processed in order of receipt; and the Use of a particular Public Park, or other City property or part thereof shall be allocated in order of receipt of fully executed applications accompanied by the required application fee.

100.07 (C)(2) ***Approval or denial***. The City Manager shall not consider an application for a permit unless all the required documentation and fees accompany the application. All terms and conditions for issuance of the permit must be completed at least 30 days prior to the event unless a longer time period is prescribed by the City Manager or if such time period is waived by the City Manager as described in this Section. The City Manager shall act upon the completed application for a permit within seven days after the receipt thereof, and must notify the Applicant of the approval or denial of the application within that same time period. However, the City may extend the period of review for an additional seven days by issuance of a written notice of extension. Written notice of denial or notice of extension shall be served on the Applicant by personal delivery, or by United States mail, with proper postage prepaid, to the name and address set forth on the application for permit.

100.07 (C)(3) ***Contents of notice; grounds for denial***. Notice of denial of an application for permit shall clearly set forth the grounds upon which the permit was denied. Where an application or permit has been denied because a fully executed prior application for the same time and place has been received, and a permit has been or will be granted to the prior Applicant authorizing uses or activities that do not reasonably permit multiple occupancy of the particular area, the City may propose an alternative place, if available for the same time, or an alternative time, if available for the same place. The City may deny an application for permit on any of the following grounds:

100.07 (C)(3)(a) the application for permit (including any required attachments and submissions) is not fully completed and executed;

100.07 (C)(3)(b) the Applicant has not tendered the required application fee with the application, or has not tendered the required user fee, indemnification agreement, insurance certificate, security deposit or waiver application within the times prescribed by the City Manager;

100.07 (C)(3)(c) the application for permit contains a material falsehood or misrepresentation;

100.07 (C)(3)(d) the Applicant is legally incompetent to contract or to sue and be sued;

100.07 (C)(3)(e) the application or the Person on whose behalf the application for permit was made has on prior occasions damaged City property and has not paid in full for such damage, or has other outstanding and unpaid debts to the City;

100.07 (C)(3)(f) a fully executed prior application for permit for the same time and place has been received, and a permit has been or will be granted to a prior Applicant authorizing uses or activities that do not reasonably permit multiple occupancy of the particular Public Park, or other Public Property or part hereof;

100.07 (C)(3)(g) the use or activity intended by the Applicant would conflict with planned programs organized and conducted by the City;

100.07 (C)(3)(h) the proposed use or activity is prohibited by or inconsistent with the Uses of the Public Park or other Public Property;

100.07 (C)(3)(i) the use or activity intended by the Applicant would present a threat to the health, safety or welfare of the Applicant, other users of the Public Park or other Public Property, City employees or the public;

100.07 (C)(3)(j) the Applicant has not complied or cannot comply with applicable licensure requirements, ordinances or regulations of the City concerning the sale or offering for sale of any goods or services;

100.07 (C(3)(k) the use or activity intended by the Applicant is prohibited by Law, or City ordinances or regulations; or

100.07 (C)(3)(l) the Applicant or the Person on whose behalf the application for permit was made has on prior occasions made material misrepresentations regarding the nature or scope of an event or activity previously permitted or has violated the terms of prior permits issued to or on behalf of the Applicant.

100.07 (C)(4) ***Amendment or revision of applications.*** Any amendment or revision of an application or permit shall for purposes of determining the priority of the application for permit, relate back to the original filing thereof; but the time in which the City shall grant or deny the application for permit and serve notice of such granting or denial shall be computed from the date of the amendment or revision.

100.07 (D) ***Procedures for review; waivers***.

100.07 (D)(1) ***Review by City Commission***.

100.07 (D)(1)(a) ***Appeal period.*** Any Applicant who is denied a permit or denied a request for a waiver of user fee, security deposit, or certificate of insurance, or a permittee who has all or a portion of its security deposit retained because it was assessed damages or a fine pursuant to this ordinance may, within three days of the service of notice of such determination, file a written appeal from such determination with the City Commission. If the Applicant fails to file a written appeal within such three day period, then any rights to appeal shall be deemed waived;

100.07 (D)(1)(b) ***Action by Commission.*** The City Commission shall have seven days from the date on which the appeal was received in which to serve upon the Applicant a notice that the Commission has affirmed, modified or reversed the denial of a permit, or retention of security deposit. Such notice shall be deemed served upon the Applicant or permittee when it is personally delivered or when it is sent by United States mail, with proper postage prepaid, to the name and address set forth on the application for permit. If such notice is not served upon the Applicant or permittee within seven days of the date upon which the appeal was filed, then the denial or retention of security deposit shall be deemed affirmed.

100.07 (D)(2) ***Form of appeals***. Any appeals filed pursuant to this Chapter shall state succinctly the grounds upon which it is asserted that the determination should be modified or reversed and shall be accompanied by copies of the application for permit, the written notice of the determination of the City, and any other papers material to the determination.

100.07 (D)(3) ***Waiver of requirements.*** Any requirements for a user fee, application fee, cost recovery fee, security deposits, or certificate of insurance shall be waived by the City Manager, if the activity is protected by the First Amendment of the United States Constitution and the requirement would be so financially burdensome that it would preclude the Applicant from using City property for the proposed activity. However, fees for use of City equipment and special services shall not be waived pursuant to this subsection. Application for a waiver shall be made on a form prescribed by the City Manager and submitted simultaneously with the permit application. The application for a waiver must include an affidavit by the Applicant and sufficient financial information about the Applicant to enable the City Manager to determine whether the requirement(s) would be so financially burdensome that it would preclude the Applicant from using City property for proposed activity.

100.07 (D)(3)(a) If it appears that the Applicant does not have the ability to acquire sufficient funds to satisfy the user fee requirement prior to the proposed event, but that the Applicant intends to raise sufficient funds at the event, the City Manager shall require the Applicant to pay such user fee out of the proceeds of the proposed event.

100.07 (D)(3)(b) If no written denial is issued within 14 days of the date on which the application for such waiver is fully completed, executed and filed with the City Manager, the waiver request shall be deemed denied. Denials of requests for such waivers shall be subject to the appeal procedures contained in this Section.

§ 100.08 WAIVER OF PARKING RESTRICTIONS.

The prohibition of any manner of parking as specified in this Code may be waived for a special event by the City Manager, provided that all required permits are obtained and that Traffic movement arrangements have both been reviewed and approved by the Police Department in advance.

§ 100.09 ALCOHOLIC BEVERAGES.

For those events where the Applicant wishes to serve Alcoholic Beverages, the application must demonstrate that the following additional criteria will be met:

100.09 (A) ***Events with 50 or fewer participants.*** Events where 50 or fewer participants are expected at any given time and that will be held within 50 feet of the entrance of the establishment sponsoring the event:

100.09 (A)(1) The event may not block the Sidewalk or any other means of pedestrian travel; and

100.09 (A)(2) If the Police Chief finds that there are special circumstances requiring an off duty deputy, he/she may require such off duty Officers as he/she finds are necessary to maintain order (a decision of the Police Chief to require off duty Officers may be appealed to the City Commission pursuant to the procedures of **§** 124.69.)

100.09 (B) ***Events with more than 50 participants.*** For events where more than 50 participants are expected at any given time or that will be held further than 50 feet from the entrance of the establishment sponsoring the event:

100.09 (B)(1) A specific area must be designated where the Alcoholic Beverages will be served and consumed. The Applicant must detail what steps will be taken to ensure that no open container of alcohol is removed from the designated area and that order is maintained at the event. Such steps must include, but are not limited to:

100.09 (B)(1)(a) Limiting access to the area;

100.09 (B)(1)(b) Provision of off duty police Officers to enforce order and the boundaries of the area as follows:

100.09 (B)(1)(b)1. For events where the number of anticipated participants does not exceed 100 at any given time, two Officers are required;

100.09 (B)(1)(b)2. For events where the number of anticipated participants exceeds 100 at any given time, two Officers plus one additional Officer for each additional 100, or portion thereof, anticipated participants at any given time (if, during the actual event, the City Manager finds that there are significantly more participants at the event than the Applicant has provided off duty Officers for, this may be considered in reviewing any future application from the same or a related Applicant);

100.09 (B)(1)(b)3. If the Police Chief finds that there are special circumstances requiring a greater number of off duty deputies than required by (a) and (b) above, he/she may require such additional off duty Officers as he/she finds are necessary to maintain order (a decision of the Police Chief to require additional off duty Officers may be appealed to the City Commission pursuant to the procedures of § 124.69);

100.09 (B)(2) Provision must be made for appropriate Traffic control, etc.;

100.09 (B)(3) All Alcoholic Beverages must be served in paper or plastic containers. No glass will be permitted; and

100.09 (B)(4) Non-Alcoholic Beverage alternatives must be available at all times when alcohol is being served.

100.09 (C) ***Requirements.*** General requirements for all events:

100.09 (C)(1) All Federal, State, and local Laws must be complied with, and all necessary State licensing must be in place.

100.09 (C)(2) Proper training in the identification of minors and individuals who are intoxicated must be provided to anyone who will be serving the Alcoholic Beverages.

100.09 (C)(3) No "drinking contests" will be permitted.

100.09 (C)(4) No more than one permit allowing the serving of Alcoholic Beverages will be issued to the same, or a related, entity in any six-month period.

100.09 (C)(5) In addition to the regular event permit fee, any Applicant for a permit allowing the serving of Alcoholic Beverages shall pay an Alcoholic Beverage permit processing fee in an amount to be set and amended by resolution of the City Commission.

100.09 (C)(6) No permit allowing Alcoholic Beverage consumption will be issued for "youth-oriented" events, such as Carnivals, youth sports events, etc.

100.09 (C)(7) If at any time, in the opinion of the Police Chief, or designee, proper order is not being maintained at the event, and a danger to public safety exists, he/she may immediately revoke any permit issued under this Section and the service of Alcoholic Beverages must immediately cease.

§ 100.10 EVENT SIGNAGE.

100.10 (A) All special event Signs, including identification, shall comply with Chapter 126. All special event Signs shall be permitted as part of the special event permit in accordance with the procedures established in this Chapter. No separate Sign permit shall be necessary except as otherwise required by Chapter 126. In addition, the following regulations shall apply:

100.10 (B) Each special event Sign shall not be larger than 16 square feet, and shall not be higher than six feet above grade on non-residential property or on Public Property. On

Residential Property, each special event Sign shall not exceed four square feet, and the top of the Sign shall not be higher than four feet above grade.

100.10 (C) Special event Signs may be authorized by the City for:

100.10 (C)(1) periods of up to only 30 consecutive days in advance of any special event in any 12 month period,

100.10 (C)(2) during the special event; and

100.10 (C)(3) no more than three days after the special event or activity has ended.

100.10 (D) Only one identification special event Sign shall be allowed on any parcel.

SPORTS LEAGUES IN PUBLIC PARKS

§ 100.11 BACKGROUND CHECKS.

100.11 (A) ***Background check requirement.*** All adult managers and coaches, adult assistant managers and coaches, and any other adults regardless of title or designation who have more than an occasional league-related interaction with a child at City facilities, courts or playing fields shall be required to undergo background checks. The local level governing board of the sports league shall ensure that such background checks are conducted.

100.11 (B) ***Type of background check; analysis.*** A thorough State and national background check that identifies an individual's entire criminal history shall be conducted. The analysis of the background check shall focus only on those offenses that most directly impact both children and adults, which include but are not limited to the following:

100.11 (B)(1) Any illegal activity of a sexual nature;

100.11 (B)(2) Acts of violence;

100.11 (B)(3) Acts of lewd or lascivious behavior;

100.11 (B)(4) Drug possession and/or drug distribution; and

100.11 (B)(5) Repeated public intoxication.

100.11 (C) ***Frequency of background checks.*** Every adult who is new to a City youth sports league shall be subject to an initial background check that shall be completed prior to that adult's involvement in any capacity. A background check shall be conducted at least every three Years. An adult who has more than a three Year break between background checks shall be considered as being new to the league and shall be subject to an additional background check.

100.11 (D) ***Responsibility for payment of costs.*** All background check related costs shall be the sole responsibility of the league. In the event that an adult is involved in more than

one sports league, the respective leagues should work together to share the costs in a mutually beneficial manner.

100.11 (E) ***Follow-up to discovery of criminal history.*** If any relevant offense is identified through a background check, the local level governing board of the league shall determine whether the individual shall be qualified to participate with the league. If the board determines that the individual's participation would be detrimental, the board should deem the individual unsuitable for league participation.

100.11 (F) ***Notification regarding compliance.*** Prior to the commencement of each Year's practice season, the local level governing board of the league shall submit written certification to the City that the league has complied with the City's requirements regarding background checks on all adults participating in the league. The certifying document shall be signed by the presiding officer of the local level governing board of the league. Should an adult commence participation in the league after the commencement of the practice season, the league shall, as soon as reasonably possible, submit a supplemental certifying document regarding a background check on the new adult participant. The certifying document shall read as follows:

"In accordance with and pursuant to Chapter 100 of the City of Weston Code, the (League Name) hereby certifies that it has complied with the City's requirements regarding background checks on all adults participating in the league."

100.11 (G) ***Responsibility of records maintenance, ownership, and control.*** Maintenance, ownership, and control of all background check records and information generated, received, possessed and stored shall be the sole responsibility of the league, and shall be retained for a period of not less than three Years.

100.11 (H) ***Failure to mandate a State and national criminal background check.*** Any sports league that fails to mandate and complete a State and national criminal background check in accordance with the deadlines established herein shall be prohibited from utilizing any City facility, court or playing field.

§ 100.12 DESIGNATED SUPERVISOR.

100.12 (A) ***Management, control and supervision.*** Any Person that is granted a permit to utilize City athletic facilities for purposes of athletics shall manage, control and supervise all players, coaches, managers, officials and other volunteers required for the operation of its activity.

100.12 (B) ***Designated supervisor requirement.*** Each Person utilizing City athletic facilities must have a designated supervisor (who must be at least 21 years of age) on site equipped with a cellular telephone during all official games. The designated supervisor must be clearly identified by a shirt, cap or other means acceptable to the City.

100.12 (C) ***Authorization.*** The designated supervisor shall be duly authorized by the Person to take whatever actions they deem appropriate to ensure the safety, health and welfare of the participants and spectators.

100.12 (D) ***Failure to have designated supervisor.*** Any Person that fails to have a designated supervisor may be prohibited from utilizing any City athletic facility.

§ 100.13 RECREATION INSTRUCTORS.

No Person shall conduct any lessons, classes or training for a particular sport or activity and charge a fee at any Public Park or Recreation Facility without entering into a written agreement with the City. Such agreement shall require the instructor to submit to a screening and background check, indemnify the City, and provide proof of insurance acceptable to the City.

TITLE XI: PUBLIC WORKS

CHAPTER 110. SOLID WASTE; RECYCLING.

§ 110.01 WASTE FLOW CONTROL.

110.01 (A) ***Requirement to deliver waste to Broward County.*** All Persons within the City shall use exclusively the Resource Recovery System identified in the Solid Waste Interlocal Agreement for the disposal of all Solid Waste generated within the City for the purpose of ensuring that the Resource Recovery System receives an adequate quantity of Solid Waste from Solid Waste generated within its boundaries.

All Solid Waste generated within the City's geographic boundaries shall be delivered to the Resource Recovery System transfer or disposal facility or facilities designated in the plan of operation under the Solid Waste Interlocal Agreement and further relinquishes any and all title and interest in Solid Waste collected or generated within its geographical boundaries upon delivery of such Solid Waste to the Resource Recovery System transfer or disposal facility or facilities designated in said plan of operations.

110.01 (B) ***Exclusion.*** Waste generated within the City that is shown to be destined for transportation to any destination outside of the State of Florida, based upon a sworn affidavit of a Hauler delivered to the City reciting facts that evidence the transportation and disposal of waste outside the State of Florida, is excluded from the flow control provisions set forth herein.

§ 110.02 GARBAGE STANDARDS.

110.02 (A) ***Single-Family/curbside residential.*** The following requirements shall apply to all residential Solid Waste generated by Single-Family/curbside residential consumers:

110.02 (A)(1) Household Waste shall only be placed and kept in Garbage bags inside an Automated Cart when put out for collection.

110.02 (A)(2) Automated Carts put out for collection shall be placed within two feet of the curb with the handle facing away from the curb. Automated Carts shall be placed at least three feet away from any other object, including but not limited to Trees, mailboxes, parked cars or Utility lines. All Automated Carts and Recycling Bins or Recycling Carts shall be shielded from visibility from any adjacent Street and from the view of any abutting residence by Landscaping, screening or placement within an enclosed garage or Structure at all times, except when put out for collection in conformity with this Section. Automated Carts and Recycling Bins or Recycling Carts shall not be put out prior to 6:00 p.m. on the day before collection and shall be stored by 9:00 p.m. on the day of collection.

110.02 (B) ***Multi-family residential and commercial customers.*** Waste generated by multi-family residential and commercial customers shall only be placed and kept in Garbage bags inside a roll-off Container or dumpster utilized for waste collection. Any roll-off Container or other form of dumpster in a Multi-Family Residential or Commercial District must be maintained to comply with the following standards:

110.02 (B)(1) The Container or dumpster shall be maintained in a clean and sanitary condition free of rust and graffiti;

110.02 (B)(2) If it is necessary to locate the Container on top of any grass or other Landscaped area, the area must be fully restored once the Container has been removed;

110.02 (B)(3) The Container or dumpster shall not block the primary means of ingress and egress of any Building nor any Sidewalk or encroaching into any Right-Of-Way;

110.02 (B)(4) No more than one such Container or dumpster shall be located on any parcel of property at any time; and

110.02 (B)(5) The Container or dumpster shall not overflow.

The violation of any of the above standards shall result in the City immediately having the Container removed at the property Owner's expense.

RECYCLING

§ 110.03 RECYCLING PROGRAM.

110.03 (A) ***Single-Family/curbside residential.*** The following requirements shall apply to all Recyclable Waste generated by Single-Family/curbside residential consumers:

110.03 (A)(1) ***Collection date.*** Recyclable Waste shall be collected one day per week on a day that coincides with one of the resident's Trash collection days.

110.03 (A)(2) ***Materials to be collected.*** The following materials shall be segregated from all other Solid Waste material and may be commingled in the Recycling container(s) provided: Newspapers, newspaper inserts, and all clean paper, such as magazines, phone books, catalogs, junk mail, regular paper, printer paper and receipts. Colorless, green, and brown glass containers, aluminum, steel, and bimetal containers, polycoated tabletop containers and aseptic packages, plastic containers types #1, #2, and #3, cereal boxes, shoe boxes, and cartons and drink boxes shall be placed in the Recycling container provided. Completed folded cardboard boxes that are placed beside a Recycling Bin or Recycling Cart, and newspapers placed in a Recycling Bin or Recycling Cart shall be collected by the City's Solid Waste contractor ("Contractor"). Cardboard boxes and newspapers that have been properly set out and have become wet due to local weather conditions shall be collected by the Contractor.

110.03 (A)(3) ***Requirements.*** Food and beverage containers must be rinsed clean of residue.

110.03 (A)(4) ***Method of collection.*** A minimum of two 14-gallon Recycling containers will be provided to each Single-Family home by the Contractor. Furnishing of the initial

containers shall be the responsibility of the Contractor. Replacement of broken or stolen containers shall be the responsibility of the Contractor upon notification to the Contractor by the resident. The Contractor shall retain ownership of all containers. Recyclables, contained as provided for herein, shall be placed curbside on the scheduled collection day adjacent to the Solid Waste.

110.03 (B) ***Multi-family residential and commercial customers.***

110.03 (B)(1) Multi-family residential and commercial customers shall be responsible for implementing an On-Site Recycling program for Recycling those items set forth in (A)(2) in conjunction with the City's Solid Waste contractor/franchisee.

110.03 (B)(2) The Recycling program at each multi-family residential facility shall ensure that each living unit has access to a container or containers suitable for the collection of recyclables as defined by this subchapter. The type and frequency of collection service and the type, number, and size of containers for multi-family residential and commercial customers shall be determined by the Solid Waste contractor/franchisee based on the requirements of the particular location. Frequency of collection shall be at least once a week. All recyclables may be commingled in the containers located at multi-family residential facilities.

110.03 (C) ***Hazardous materials.*** Containers containing hazardous or noxious wastes shall be excluded from the residential Recycling program.

110.03 (D) ***Commercial containers.*** All commercial containers used for accumulating Recovered Materials shall be permanently labeled "FOR RECYCLING ONLY, NO TRASH".

§ 110.04 SCAVENGING.

Recyclable Materials, Solid Waste, Disaster Debris and bulk Trash are the property of the Owner or Tenant of each individual residential unit and multi-family residential unit until such time as they are collected by the Contractor. It shall be a violation of this Section for any Person not authorized in writing by the City, through its franchisee, to collect or remove any item that has been specifically placed for collection through the City's Solid Waste, Disaster Debris, bulk Trash or Recycling program.

CONSTRUCTION DEBRIS

§ 110.10 ROLL-OFF CONTAINERS/DUMPSTERS IN SINGLE-FAMILY RESIDENTIAL DISTRICTS (SF).

110.10 (A) ***General prohibition; exceptions.*** All roll-off containers or other forms of dumpsters are prohibited in all Single-Family Residential Districts (SF) except:

110.10 (A)(1) When a valid, City-issued Building Permit is active on the property; or

110.10 (A)(2) During periods of Construction that do not require a Building Permit, so long as the roll-off container or other form of dumpster is not on the property for more than ten calendar days during any 90-day period.

110.10 (B) ***Standards.*** Any roll-off container or other form of dumpster in a Single-Family Residential District must be maintained to the following standards:

110.10 (B)(1) In a clean and sanitary condition free of rust and graffiti;

110.10 (B)(2) If it is necessary to locate the container on top of any grass or other landscaped area, the area must be fully restored once the container has been removed;

110.10 (B)(3) Not blocking the primary means of ingress and egress of any Building nor any Sidewalk or encroaching into any Right-Of-Way;

110.10 (B)(4) Not more than one such container or dumpster on any parcel of property at any time;

110.10 (B)(5) Not overflowing; and

110.10 (B)(6) Not to be used for the disposal of any food waste, Household Waste, or hazardous substance.

The violation of any of the above standards shall result in the City immediately having the container removed at the property Owner's expense.

SOLID WASTE COLLECTION SERVICES ASSESSMENT

§ 110.20 GENERAL FINDINGS.

It is ascertained, determined, and declared that:

110.20 (A) ***Powers.*** The City Commission may exercise any governmental, corporate, or proprietary power for a municipal purpose except when expressly prohibited by Law, and the City Commission may legislate on any subject matter on which the Florida Legislature may act, except those subjects described in Florida Statutes § 166.021(3)(a), (b), (c), and (d). The subject matter of Florida Statutes § 166.021(3)(a), (b), (c), and (d) are not relevant to the imposition of Assessments related to Solid Waste collection services of the City.

110.20 (B) ***Purpose.*** The purpose is to:

110.20 (B)(1) Provide procedures and standards for the imposition of Citywide Solid Waste Collection Services Assessments on Single-Family Residential Property;

110.20 (B)(2) Authorize a procedure for the funding of Solid Waste collection services providing special benefits to Single-Family Residential Property within the City; and

110.20 (B)(3) Legislatively determine the special benefit provided to Assessed Property from the provision of the City's Solid Waste collection services.

110.20 (C) ***Non-ad valorem Assessments.*** The Solid Waste Collection Services Assessments imposed using the procedures provided in this subchapter shall constitute non-ad valorem Assessments within the meaning and intent of the Uniform Assessment Collection Act.

110.20 (D) ***Imposition by the City Commission.*** The Solid Waste Collection Services Assessments to be imposed using the procedures provided in this subchapter are imposed by the City Commission, not the Broward County Board of County Commissioners, Property Appraiser or Tax Collector. The duties of the Property Appraiser and Tax Collector under the provisions of this subchapter and the Uniform Assessment Collection Act are ministerial.

§ 110.21 LEGISLATIVE DETERMINATION OF SPECIAL BENEFIT.

It is ascertained and declared that Solid Waste collection services provide a special benefit to assessed parcels because Solid Waste collection services possess a logical relationship to the Use and enjoyment of improved property by:

110.21 (A) ***Cleanliness.*** Maintaining cleanliness through the proper, safe and cost effective removal of Solid Waste and Recyclable Materials from the properties;

110.21 (B) ***Reduction of opportunities of threats.*** Reducing opportunities for threats to health safety by removal of Debris and Garbage from the Residential Properties;

110.21 (C) ***Removal of materials supporting rodents.*** Removing materials that support rodent and other nuisance pest infestation from the residential and surrounding properties; and

110.21 (D) ***Protection and enhancement of property values.*** Protecting and enhancing property values resulting from uniform delivery and availability of such residential Solid Waste collection services.

§ 110.22 ALTERNATIVE METHOD OF ACTION.

110.22 (A) ***Alternative method.*** This subchapter shall be deemed to provide an additional and alternative method and shall be regarded as supplemental and additional to powers conferred by other Laws, and shall not be regarded as a derogation of any powers now existing or that may hereafter come into existence. This subchapter, being necessary for the welfare of the inhabitants of the City, shall be liberally construed to effect the purposes hereof.

110.22 (B) ***Notice.*** Nothing herein shall preclude the City Manager from directing and authorizing any of the following:

110.22 (B)(1) Any supplemental or additional notice deemed proper, necessary, or convenient by the City;

110.22 (B)(2) Any notice required by this subchapter, or

110.22 (B)(3) Any notice required by Law, including the Uniform Assessment Collection Act.

§ 110.23 ANNUAL SOLID WASTE COLLECTION SERVICES ASSESSMENTS.

110.23 (A) ***Imposition.*** The City Commission is authorized to impose an annual Solid Waste Collection Services Assessment to fund all or any portion of the Solid Waste Collection Services Assessed Cost upon benefited property at a rate of Assessment based on the special benefit accruing to such property from the City's provision of Solid Waste collection services. All Solid Waste Collection Services Assessments shall be imposed in conformity with the procedures set forth in this subchapter.

110.23 (B) ***Apportionment methodology.*** The amount of the Solid Waste Collection Services Assessment imposed in a Fiscal Year against an Assessed Property shall be determined pursuant to an apportionment methodology designed to provide a fair and reasonable apportionment of the Solid Collection Services Assessed Cost among properties on a basis reasonably related to the special benefit provided by Solid Waste collection services funded with Assessment proceeds.

110.23 (C) ***Imposition by Resolution.*** The Solid Waste Collection Services Assessment for the last Fiscal Year may be imposed for the upcoming Fiscal Year by resolution without a public hearing before the City Commission.

110.23 (D) ***Notice and public hearing.*** The City shall give notice and hold a public hearing on the imposition of the Solid Waste Collection Services Assessment, if:

110.23 (D)(1) Any of the rates of the Solid Waste Collection Services Assessment proposed for the upcoming Fiscal Year are increased over any of the rates of the Solid Waste Collection Services Assessment for the last Fiscal Year;

110.23 (D)(2) The geographical boundaries of the City have changed;

110.23 (D)(3) There is a change in the purpose of the Solid Waste Collection Services Assessment; or

110.23 (D)(4) There is a change in the use of the revenue generated by the collection services Assessment.

110.23 (E) ***Inclusion on TRIM Notice.*** Any Solid Waste Collection Services Assessment or proposed Solid Waste Collection Services Assessment imposed pursuant to the Uniform Assessment Collection Act shall be included on the TRIM Notice.

110.23 (F) ***Government Parcel.*** Nothing contained in this subchapter shall be construed to require the imposition of a Solid Waste Collection Services Assessment against a Government Parcel.

110.23 (G) ***Exemption.*** The City may exempt from the Solid Waste Collection Services Assessment parcels used for purposes that provide total exemption from ad valorem taxation under Florida Law.

110.23 (H) ***Mixed residential and other uses.*** Notwithstanding the Land Use Chapter of the Code and corresponding designation assigned to a parcel, if any parcel contains mixed residential and other uses, the City may assess the portion of the property designated residential at the rate of Assessment and unit of measurement applicable.

§ 110.24 ASSESSMENT ROLL.

110.24 (A) ***Assessment Roll.*** The City Manager shall prepare, or cause to be prepared, the Assessment Roll, which shall contain the following:

110.24 (A)(1) A summary description of all Assessed Property conforming to the description contained on the Tax Roll;

110.24 (A)(2) The name of the Owner of the Assessed Property; and

110.24 (A)(3) The amount of the Solid Waste Collection Services Assessment to be imposed against each Assessed Property.

110.24 (B) ***Retained by City Clerk.*** The Assessment Roll shall be retained by the City Clerk and shall be open to public inspection. The foregoing shall not be construed to require that the Assessment Roll be in printed form if the amount of the Solid Waste Collection Services Assessment for each parcel can be determined by use of a computer.

§ 110.25 NOTICE BY PUBLICATION.

110.25 (A) ***Notice.*** The City Clerk shall publish in a newspaper of general circulation within the City a notice stating that at a public meeting of the City Commission on a certain date and hour, the City Commission will hear and consider the objections of all Interested Persons to the Assessment resolution that shall establish the rate of Assessment and approve the Assessment Roll. This notice shall be published at least 20 calendar days prior to the public hearing.

110.25 (B) ***Requirements.*** The published notice shall conform to the requirements set forth in the Uniform Assessment Collection Act. Such notice shall include:

110.25 (B)(1) The name of the local governing board;

110.25 (B)(2) A geographic depiction of the property subject to the Solid Waste Collection Services Assessment;

110.25 (B)(3) The proposed schedule of the Assessment;

110.25 (B)(4) A brief and general description of the Solid Waste collection services to be provided;

110.25 (B)(5) The fact that the Assessment will be collected by the Tax Collector;

110.25 (B)(6) A statement that all affected parcel Owners have the right to appear at the public hearing and the right to file written objections within 20 days of the publication of the notice; and

110.25 (B)(7) A statement that the Assessment Roll is available for inspection at the City Clerk's office or such other place as determined by the City Manager.

§ 110.26 NOTICE BY MAIL.

110.26 (A) ***Notice by mail; TRIM notice.*** In addition to the published notice required by § 110.25, the City Clerk shall provide notice of the proposed Solid Waste Collection Services Assessment by first class mail to the Owner of each parcel of property subject to the Solid Waste Collection Services Assessment. Alternatively, notice pursuant to this Section may be given through the TRIM Notice, provided that the TRIM Notice contains all information required by this Section and the Uniform Assessment Collection Act, if applicable.

110.26 (B) ***Notice contents.*** Such notice shall include:

110.26 (B)(1) The purpose of the Solid Waste Collection Services Assessment;

110.26 (B)(2) The rate of Assessment to be levied against each parcel;

110.26 (B)(3) The unit of measurement applied to determine the Solid Waste Collection Services Assessment;

110.26 (B)(4) The number of such units contained in each parcel;

110.26 (B)(5) The total revenue to be collected by the City from the Solid Waste Collection Services Assessment;

110.26 (B)(6) A statement that failure to pay the Solid Waste Collection Services Assessment will cause a tax certificate to be issued against the property or foreclosure proceedings to be instituted, either of which may result in a loss of title to the property;

110.26 (B)(7) A statement that all affected Owners have a right to appear at the hearing and to file written objections with the City Commission within 20 days of the notice; and

110.26 (B)(8) The date, time, and place of the hearing.

110.26 (C) ***Requirements for mailed notice.*** The mailed notice shall conform to the requirements set forth in the Uniform Assessment Collection Act. Notice shall be mailed to each Owner at such address as is shown on the Tax Roll. Notice shall be mailed at least 20 calendar days prior to the public hearing. Notice shall be deemed given upon delivery thereof to the possession of the United States Postal Service. Failure of the Owner to receive such notice due to mistake or inadvertence shall not affect the validity of the Assessment Roll nor release or discharge

any obligation for payment of a Solid Waste Collection Services Assessment imposed by the City Commission pursuant to this subchapter.

§ 110.27 ADOPTION OF AN ASSESSMENT RESOLUTION.

110.27 (A) ***Written objections.*** If a public hearing is required for the imposition of the Solid Waste Collection Services Assessment, the City Commission shall receive and consider written objections of Interested Persons and may then, or at any subsequent meeting of the City Commission adopt an Assessment resolution. All written objections to the Solid Waste Collection Services Assessment, the Assessment Roll or the Assessment resolution shall be filed with the City Clerk any time between the publishing or mailing of the notice of public hearing and the date of the public hearing, and shall be and become part of the record of the public hearing.

110.27 (B) ***Assessment Resolution.*** If a public hearing is not required for imposition of the Solid Waste Collection Services Assessment, the City Commission may adopt an Assessment resolution at a public meeting.

110.27 (C) ***Resolution requirements.*** The Assessment resolution shall:

110.27 (C)(1) Adopt, or amend and adopt as amended, the City Manager's report given pursuant to § 110.24;

110.27 (C)(2) Establish the rate of Assessment to be imposed in the upcoming Fiscal Year;

110.27 (C)(3) Approve the Assessment Roll, with such amendments as the City Commission deems just and equitable; and

110.27 (C)(4) Determine the method of collection.

110.27 (D) ***Certification of Assessment Roll.*** After the Assessment resolution is adopted, the Assessment Roll shall be certified by the City Clerk and delivered to the Tax Collector, as required by the Uniform Assessment Collection Act, or if the alternative method described in § 110.35 is used to collect the Solid Waste Collection Services Assessments, such other official as the City Commission shall designate by resolution.

§ 110.28 EFFECT OF ADOPTION OF ASSESSMENT RESOLUTION.

110.28 (A) ***Legislative determination.*** The adoption of the Assessment resolution by the City Commission shall constitute a legislative determination that all parcels assessed derive a special benefit from the Solid Waste collection services to be provided or construed and a legislative determination that the Solid Waste Collection Services Assessments are fairly and reasonably apportioned among the parcels that receive the special benefit.

110.28 (B) ***Final adjudication.*** The adoption of the Assessment resolution shall be the final adjudication of the issues presented as to Assessed Property (including, but not limited to, the determination of special benefit and fair apportionment to the Assessed Property, the method of apportionment and Assessment, the rate of Assessment, the validity of the Assessment Roll, the presence of errors in the Assessment Roll and the levy and lien of the Solid Waste Collection

Services Assessments), unless proper steps shall be initiated in a court of competent jurisdiction to secure relief within 20 days of the date of the public hearing on the Assessment resolution. Nothing contained herein shall be construed or interpreted to affect the finality of any Solid Waste Collection Services Assessment not challenged within the required 20-day period for those Solid Waste Collection Services Assessments previously imposed against Assessed Property by the inclusion of the Assessed Property on an Assessment Roll.

110.28 (C) ***Adjustment.*** If the Solid Waste Collection Services Assessment for any parcel shall be modified, increased, reduced, or abated by the court, an adjustment shall be made on the Assessment Roll.

§ 110.29 LIEN OF SOLID WASTE COLLECTION SERVICES ASSESSMENTS.

Upon the adoption of the Assessment Roll, all Solid Waste Collection Services Assessments shall constitute a lien against Assessed Property equal in rank and dignity with the liens of all State, county, district, or municipal taxes and Special Assessments. Except as otherwise provided by Law, such lien shall be superior in dignity to all other prior liens, mortgages, titles, and claims until paid. The lien for a Solid Waste Collection Services Assessment shall be deemed perfected upon the City Commission's adoption of the Assessment resolution. The lien for a Solid Waste Collection Services Assessment collected under the Uniform Assessment Collection Act shall attach to the property included on the Assessment Roll as of the prior January 1, the lien date for ad valorem taxes imposed under the Tax Roll. The lien for a Solid Waste Collection Services Assessment collected under the alternative method of collection provided in § 110.35 shall be deemed perfected upon the City Commission's adoption of the Assessment resolution, and shall attach to the parcel on such date of adoption.

§ 110.30 REVISIONS TO SOLID WASTE COLLECTION SERVICES ASSESSMENTS.

If any Solid Waste Collection Services Assessment made under these provisions of this subchapter is either in whole or in part annulled, vacated, or set aside by the judgment of any court of competent jurisdiction, or if the City Commission is satisfied that any such Solid Waste Collection Services Assessment is so irregular or defective that the same cannot be enforced or collected, or if the City Commission has failed to include or has omitted any property on the Assessment Roll, which property should have been so included, the City Commission may take all necessary steps to impose a new Solid Waste Collection Services Assessment against any property benefited by the Solid Collection Services Assessed Costs, following as nearly as may be practicable, these provisions. In case such second Solid Waste Collection Services Assessment is annulled, vacated, or set aside, the City Commission may obtain and impose other Solid Waste Collection Services Assessments until a valid Solid Waste Collection Services Assessment is imposed.

§ 110.31 PROCEDURAL IRREGULARITIES.

Any informality or irregularity in the proceedings in connection with the levy of any Solid Waste Collection Services Assessment under the provisions of this subchapter shall not affect the validity of the same after the approval thereof, and any Solid Waste Collection Services Assessment as finally approved shall be competent and sufficient evidence that such Solid Waste Collection Services Assessment was duly levied, that the Solid Waste Collection Services Assessment was duly

made and adopted, and that all other proceedings adequate to such Solid Waste Collection Services Assessment were duly had, taken, and performed as required by this subchapter. No variance from the directions hereunder shall be held material unless it be clearly shown that the party objecting was materially injured thereby.

§ 110.32 CORRECTION OF ERRORS AND OMISSIONS.

110.32 (A) ***No release or discharge of obligation for payment.*** No error or omission on the part of the City, Property Appraiser, Tax Collector, City Manager, City Commission, or their deputies or employees, shall operate to release or discharge any obligation for payment of a Solid Waste Collection Services Assessment imposed by the City Commission.

110.32 (B) ***Omitted or erroneous Assessments.*** When it shall appear that any Solid Waste Collection Services Assessment should have been imposed under this subchapter against a parcel specially benefited by the provision of Solid Waste collection services, but that such parcel was omitted from the Assessment Roll, or was erroneously assessed, or was not listed on the Tax Roll as an individual parcel as of the effective date of the Assessment Roll approved by the Assessment resolution for any upcoming Fiscal Year, the City Commission may, upon provision of a notice by mail provided to the Owner of the omitted or erroneously assessed parcel in the manner and form provided in § 110.27 of this subchapter, impose the applicable Solid Waste Collection Services Assessment for the Fiscal Year in which such error or omission is discovered, in addition to the applicable Solid Waste Collection Services Assessment due for the prior two Fiscal Years. Such Solid Waste Collection Services Assessment shall constitute a lien against Assessed Property equal in rank and dignity with the liens of all State, county, district, or municipal taxes and Special Assessments and superior in rank and dignity to all other prior liens, mortgages, titles, and claims in and to or against the real property involved. Such Solid Waste Collection Services Assessment shall be collected as provided in this subchapter, and shall be deemed perfected on the date of adoption of the resolution imposing the omitted or erroneous assessments.

110.32 (C) ***Reclassification.*** Prior to the delivery of the Assessment Roll to the Tax Collector in accordance with the Uniform Assessment Collection Act, the City Manager shall have the authority at any time, upon his or her own initiative or in response to a timely filed petition from the Owner of any property subject to a Solid Waste Collection Services Assessment, to reclassify a parcel based upon presentation of competent and substantial evidence, and correct any error in applying the Solid Waste Collection Services Assessment apportionment method to any particular parcel of property not otherwise requiring the provision of notice pursuant to the Uniform Assessment Collection Act. Any such correction shall be considered valid ab initio and shall in no way affect the enforcement of the Solid Waste Collection Services Assessment imposed under the provisions. All requests from affected property Owners for any such changes, modifications or corrections shall be referred to, and processed by, the City Manager and not the Property Appraiser or Tax Collector.

110.32 (D) ***Changes, modifications or corrections.*** After the Assessment Roll has been delivered to the Tax Collector in accordance with the Uniform Assessment Collection Act, any changes, modifications, or corrections thereto shall be made in accordance with the procedures applicable to correcting errors and insolvencies on the Tax Roll upon timely written request and direction of the City Manager.

§ 110.33 INTERIM ASSESSMENTS.

110.33 (A) ***Calculation.*** An interim Solid Waste Collection Services Assessment may be imposed against all parcels for which a Certificate Of Occupancy is issued after the adoption of the Assessment resolution. The amount of the interim Solid Waste Collection Services Assessment shall be calculated upon a monthly rate, which shall be one-twelfth of the annual rate for such parcel computed in accordance with the Assessment resolution for the Fiscal Year for which the interim Solid Waste Collection Services Assessment is being imposed. Such monthly rate shall be imposed for each full calendar month remaining in the Fiscal Year. In addition to the monthly rate, the interim Solid Waste Collection Services Assessment may also include an estimate of the subsequent Fiscal Year's Solid Waste Collection Services Assessment.

110.33 (B) ***Collection.*** Issuance of the Certificate Of Occupancy without the payment in full of the interim Solid Waste Collection Services Assessment shall not relieve the Owner of such parcel of the obligation of full payment. Any interim Solid Waste Collection Services Assessment not collected prior to the issuance of the Certificate Of Occupancy may be collected pursuant to the Uniform Assessment Collection Act, under the alternative method of collection provided in § 110.35, or by any other method authorized by Law.

110.33 (C) ***Lien.*** Any interim Solid Waste Collection Services Assessment shall be deemed due and payable on the date the Certificate Of Occupancy was issued and shall constitute a lien against such property as of that date. Said lien shall be equal in rank and dignity with the liens of all State, county, district or municipal taxes and Special Assessments, and superior in rank and dignity to all other liens, encumbrances, titles and claims in and to or against the real property involved and shall be deemed perfected upon the issuance of the Certificate Of Occupancy.

§ 110.34 METHOD OF COLLECTION.

110.34 (A) ***Uniform method.*** Unless otherwise directed by the City Commission, the Solid Waste Collection Services Assessments shall be collected pursuant to the uniform method provided in the Uniform Assessment Collection Act, and the City shall comply with all applicable provisions of the Uniform Assessment Collection Act. Any hearing or notice required by this subchapter may be combined with any other hearing or notice required by the Uniform Assessment Collection Act or other provision of Law.

110.34 (B) ***Delinquency.*** The amount of a Solid Waste Collection Services Assessment to be collected using the uniform method pursuant to the Uniform Assessment Collection Act for any specific parcel of benefited property may include an amount equivalent to the payment delinquency, delinquency fees and recording costs for a prior year's Assessment for a comparable service, facility, or program provided:

110.34 (B)(1) The collection method used in connection with the prior year's Assessment did not employ the use of the uniform method of collection authorized by the Uniform Assessment Collection Act;

110.34 (B)(2) Notice is provided to the Owner as required under the Uniform Assessment Collection Act; and

110.34 (B)(3) Any lien on the affected parcel for the prior year's Assessment is supplanted and transferred to such Solid Waste Collection Services Assessment upon certification of a non-ad valorem roll to the Tax Collector by the City.

§ 110.35 ALTERNATIVE METHOD OF COLLECTION.

In lieu of using the Uniform Assessment Collection Act, the City Commission may elect to collect the Solid Waste Collection Services Assessments by any other method that is authorized by Law or under the alternative collection method provided by this Section:

110.35 (A) ***Bills or accompanying explanatory material.*** The City Commission shall provide Solid Waste Collection Services Assessment bills by first class mail to the Owner of each affected parcel subject to the Solid Waste Collection Services Assessment. The bill or accompanying explanatory material shall include:

110.35 (A)(1) A brief explanation of the Solid Waste Collection Services Assessment;

110.35 (A)(2) A description of the unit of measurement used to determine the amount of the Solid Waste Collection Services Assessment ;

110.35 (A)(3) The number of units contained within the parcel;

110.35 (A)(4) The total amount of the Solid Waste Collection Services Assessment imposed against the parcel for the appropriate period;

110.35 (A)(5) The location at which payment will be accepted;

110.35 (A)(6) The date on which the Solid Waste Collection Services Assessment is due; and

110.35 (A)(7) A statement that the Solid Waste Collection Services Assessment constitutes a lien against Assessed Property equal in rank and dignity with the liens of all State, county, district or municipal taxes and other non-ad valorem Assessments.

110.35 (B) ***Recordation.*** A general notice of the lien resulting from imposition of the Solid Waste Collection Services Assessments shall be recorded in the official records of the City. Nothing herein shall be construed to require that individual liens or releases be filed in the official records.

110.35 (C) ***Foreclosure.*** The City Commission shall have the right to foreclose and collect all delinquent Solid Waste Collection Services Assessments in the manner provided by Law for the foreclosure of mortgages on real property or appoint or retain an agent to institute such foreclosure and collection proceedings. A Solid Waste Collection Services Assessment shall become delinquent if it is not paid within 30 days from the date payment was due. The City Commission or its agent shall notify any parcel Owner who is delinquent in payment of his or her Solid Waste Collection Services Assessment within 60 days from the date such Assessment was due. Such notice shall state that the City Commission or its agent will either:

110.35 (C)(1) Initiate a foreclosure action or suit in equity and cause the foreclosure of such parcel subject to a delinquent Solid Waste Collection Services Assessment in a method now or hereafter provided by Law for foreclosure of mortgages on real property; or

110.35 (C)(2) Cause an amount equivalent to the delinquent Solid Waste Collection Services Assessment, not previously subject to collection using the uniform method under the Uniform Assessment Collection Act, to be collected on the tax bill for a subsequent year.

110.35 (D) ***Costs, fees and expenses.*** All costs, fees and expenses, including reasonable attorney fees and title search expenses, related to any foreclosure action as described herein shall be included in any judgment or decree rendered therein. At the sale pursuant to decree in any such action, the City may be the purchaser to the same extent as any Person. The City Commission or its agent may join in one foreclosure action for the collection of Solid Waste Collection Services Assessments against any or all parcels assessed in accordance with the provisions hereof. All delinquent Owners whose property is foreclosed shall be liable for an apportioned amount of reasonable costs and expenses incurred by the City Commission and its agents, including reasonable attorney fees, in collection of such delinquent Solid Waste Collection Services Assessments and any other costs incurred by the City Commission as a result of such delinquent Solid Waste Collection Services Assessments and the same shall be collectible as a part of or in addition to, the costs of the action.

110.35 (E) ***Uniform Assessment Collection Act.*** In lieu of foreclosure, any delinquent Solid Waste Collection Services Assessment and the costs, fees and expenses attributable thereto, may be collected pursuant to the Uniform Assessment Collection Act; provided however, that:

110.35 (E)(1) Notice is provided to the Owner in the manner required by the Uniform Assessment Collection Act and this subchapter; and

110.35 (E)(2) Any existing lien of record on the affected parcel for the delinquent Solid Waste Collection Services Assessment is supplanted by the lien resulting from certification of the Assessment Roll, as applicable, to the Tax Collector.

110.35 (F) ***Correction of errors and omissions.*** Notwithstanding the City Commission's use of an alternative method of collection, the City Manager shall have the same power and authority to correct errors and omissions as provided to him or her or other City officials in § 110.32.

110.35 (G) ***Resolution.*** Any City Commission action required in the collection of Solid Waste Collection Services Assessments may be taken by resolution.

§ 110.36 GOVERNMENT PARCELS.

110.36 (A) ***Assessment bills or accompanying explanatory material for Government Parcels.*** In the event that Solid Waste Collection Services Assessments are imposed against Government Parcels, the City Commission shall provide Solid Waste Collection Services Assessment bills by first class mail to the Owner of each affected Government Parcel. The bill or accompanying explanatory material shall include:

110.36 (A)(1) A brief description of the Solid Waste Collection Services Assessment;

110.36 (A)(2) A description of the unit of measurement used to determine the amount of the Solid Waste Collection Services Assessment;

110.36 (A)(3) The number of units contained within the parcel;

110.36 (A)(4) The total amount of the parcel's Solid Waste Collection Services Assessment for the appropriate period;

110.36 (A)(5) The location at which payment will be accepted; and

110.36 (A)(6) The date on which the Solid Waste Collection Services Assessment is due.

110.36 (B) ***Due date.*** Solid Waste Collection Services Assessments imposed against Government Parcels shall be due on the same date as all other Solid Waste Collection Services Assessments and, if applicable, shall be subject to the same discounts for early payment.

110.36 (C) ***Delinquency.*** A Solid Waste Collection Services Assessment shall become delinquent if it is not paid within 30 days from the date payment was due, as identified in this Section. The City Commission shall notify the Owner of any Government Parcel that is delinquent in payment of its Solid Waste Collection Services Assessment within 60 days from the date of such Assessment was due. Such notice shall state that the City Commission will initiate a mandamus or other appropriate judicial action to compel payment.

110.36 (D) ***Costs, fees and expenses.*** All costs, fees and expenses, including reasonable attorney fees and title search expenses, related to any mandamus or other action as described herein shall be included in any judgment or decree rendered therein. All delinquent Owners of Government Parcels against which a mandamus or other appropriate action is filed shall be liable for an apportioned amount of reasonable costs and expenses incurred by the City, including reasonable attorney fees, in collection of such delinquent Solid Waste Collection Services Assessments and any other costs incurred by the City Commission as a result of such delinquent Solid Waste Collection Services Assessments and the same shall be collectible as a part of or in addition to, the costs of the action.

CHAPTER 111. WATER AND SEWER SERVICES.

§ 111.01 APPLICABILITY.

111.01 (A) ***ITDD***. All water distribution systems and Sewage collection systems owned by Indian Trace Development District (ITDD) within the City are subject to all of the requirements of this Chapter unless specifically noted otherwise.

111.01 (B) ***BDD***. Water distribution systems and Sewage collection systems in the Bonaventure Development District (BDD) owned by the City of Sunrise (Sunrise Utilities) shall be subject to the requirements specified in this Chapter only where specifically noted. For water distribution systems and Sewage collection systems in the Bonaventure Development District (BDD) owned by the City of Sunrise, the City of Sunrise Code of Ordinances regarding their water distribution and Sewage collections systems is incorporated herein.

111.01 (C) ***Additional local, State and Federal regulations.*** In addition to the regulations set forth in this Chapter, the water and Sewer standards set forth in the applicable local, State and Federal regulations shall apply to water and Sewer Systems within the ITDD and BDD, including, but not limited to,:

111.01 (C)(1) Chapter 27, Broward County Code;

111.01 (C)(2) Chapter 40E-21 and Rules 62-625 and 62-555, Florida Administrative Code; and

111.01 (C)(3) Title 40, Parts 261.21 and 403.5, Code of Federal Regulations.

§ 111.02 REQUIRED CONNECTIONS TO UTILITIES IN THE CITY.

111.02 (A) ***ITDD.*** Where an ITDD Utility service is available within 500 feet of an existing main of adequate Capacity to any facility within the City requiring that type of service, the Utility system shall be extended to a service connection and the Plumbing of the facility shall be connected to the Service Connection.

111.02 (B) ***BDD.*** Connections to the Sunrise Utilities system within the City shall comply with the City of Sunrise Code of Ordinances regarding service connections.

§ 111.03 EXTENSIONS OF UTILITY SYSTEMS IN THE CITY.

111.03 (A) ***ITDD Service Laterals and Service Connections.*** For extensions of the ITDD Utility system in the City:

111.03 (A)(1) If a main already exists in a Right-Of-Way abutting a property line, but there is no Service Lateral, or a replacement lateral is necessary, then the Owner/developer shall construct the Service Lateral and Service Connection, or at the Owner/developer's expense the City shall construct the Service Lateral and Service Connection.

111.03 (A)(2) If a new main is required, then both the main and the Service Lateral may be constructed at the same time as the new main. A water Service Connection may, at the sole discretion of the City, be constructed either at the same time as the lateral or subsequently. If either one is constructed by the developer, title to the completed product shall be transferred to the Utility.

111.03 (B) ***BDD Service Laterals and Service Connections.*** Extensions of the Sunrise Utility system in the BDD shall comply with City of Sunrise Code of Ordinances regarding water and Sewer Use.

111.03 (C) ***New mains not in master plan.*** Any new facilities between those depicted in a master plan and the Service Laterals for a Development shall be constructed by the Owner/developer, at his or her own expense. Drawings and specifications shall be submitted to the applicable Utility for review. The applicable Utility shall either approve them or return them for revision and resubmittal. If the applicable Utility determines that any portion of the work must be an Oversized Facility, then the Owner/developer shall be required to design and construct the Oversized Facility at Owner/developer's cost and shall be required to dedicate said facilities to the City.

§ 111.04 PROPERTY OWNER/DEVELOPER RESPONSIBILITIES.

111.04 (A) ***ITDD.*** Property Owners/developers within the ITDD shall be responsible for accomplishing the following prior to receipt of a Certificate Of Occupancy:

111.04 (A)(1) ***Permits for design and Construction of water and Sewer Plumbing.*** Property Owners/developers shall be responsible for designing and constructing all water and Sewer Plumbing on the property Owner's side of each Service Connection. Application for permits and payment of associated permit fees for Construction of this work shall be in accordance with applicable Laws, ordinances and regulations for Building Permits and Certificates Of Occupancy, as administered by the City;

111.04 (A)(2) ***Permits for work in City Rights-Of-Way or easements.*** Property Owners/developers shall be responsible for obtaining all permits required for any work to be done in City Rights-Of-Way or easements; and

111.04 (A)(3) ***Permits for mains.*** Property Owners/developers shall be responsible for obtaining all permits required by Broward County and State regulatory authorities for any mains to be constructed. Application and payment of fees shall be as required by those authorities.

111.04 (B) ***BDD.*** A property Owner utilizing the Sunrise Utility system shall comply with the City of Sunrise Code of Ordinances regarding water and Sewer Use.

§ 111.05 UTILITY PLACEMENT.

All new Utility facilities in the City shall be located either in a Public Right-Of-Way or in a recorded easement dedicated to public use and accepted by the City if a part of the ITDD system, and accepted by the City of Sunrise if part of the Sunrise Utility system. Easements shall be used only if

specifically approved by the City of Weston for ITDD utilities or by the City of Sunrise for Sunrise Utilities.

§ 111.06 CITY COMMISSION APPROVAL FOR CONNECTION TO UTILITIES IN THE CITY.

111.06 (A) ***ITDD.*** All new and existing Developments located within the ITDD shall be required to connect to the ITDD Utility systems when available. Such connections shall be made without any action by the City Commission, except as follows:

111.06 (A)(1) If a Developer's Agreement is required, then the Developer's Agreement shall be accepted by resolution of the City Commission prior to execution of the connection contract between the developer and the City.

111.06 (A)(2) A significant industrial user shall not be permitted to connect to the ITDD Sewer System unless, and until, the City has amended the Code so as to incorporate an EPA approvable "Industrial Cost Recovery System," as defined in Federal Regulation 40 CFR 35

111.06 (B) ***Outside the ITDD.*** Property located outside the ITDD shall not be allowed to connect to a City Utility system unless the connection is authorized by the City Commission.

111.06 (C) ***BDD.*** Approvals for connection to Utilities owned by the Sunrise Utility system in the City of Weston shall be subject to City of Sunrise Code of Ordinances regarding Utilities.

§ 111.07 TAMPERING AND DAMAGING UTILITY FACILITIES IN THE CITY.

111.07 (A) ***ITDD and BDD.*** For tampering or damage to any Utility facilities of any Utility system in the City the following apply:

111.07 (A)(1) ***Prevention of water meter from registering quantity of water.*** It is unlawful to willfully alter, tamper with, or damage any meter, meter seal, pipe, conduit, line or other apparatus or device belonging to a water and Sewer System in the City in order to prevent any water meter from registering the quantity of water which otherwise would pass through the same; or to alter the index or break the seal of any such meter; or in any way to hinder or interfere with the proper action or just registration of any such meter or device.

111.07 (A)(2) ***Metered or unmetered fire hydrant.*** It is unlawful for any Person, other than those individuals who are expressly authorized by the Owner of the Utility System to do so, to willfully open, tamper with, or damage a metered or unmetered fire hydrant, pipe, conduit, line, or other similar apparatus or device belonging to the Owner of a water and Sewer System in the City.

111.07 (A)(3) ***Discontinued service.*** It is unlawful to tamper with or change, or make any connection with, the water and Sewer System in the City without the written consent of the Owner of the Utility System, or to make any reconnection with the water and Sewer System or any part thereof when service has been discontinued for delinquent charges until all such delinquent charges have been paid in full.

111.07 (A)(4) ***Direct benefit.*** It is unlawful to knowingly use, or receive the direct benefit from the use of, the water and Sewer System in the City, when such direct benefit has resulted from the tampering with, altering of, or any injury to any connection, meter, pipe, conduit, line, or other apparatus or device owned, operated, or controlled by the Owner of a water and Sewer System in the City, for the purpose of avoiding payment.

111.07 (B) ***ITDD.*** In addition to subsection (A) above, for tampering or damage to Utility facilities of the ITDD Utility system the following shall also apply:

111.07 (B)(1) ***Discontinuance of service.*** The City has the right to discontinue service in cases where an illegal connection is found and to assess an average water bill for a period of up to 24 months when it has been established that the user has been receiving water service without payment for the same. This right shall not preclude the Owner of the system from seeking and obtaining other remedies and penalties as permitted by Law.

111.07 (B)(2) ***Prosecution.*** The City may prosecute any Person violating the provisions of this Section to the fullest extent permitted by Law, and will enforce the provisions of this Section, or any penal law relating to the subject matter herein, consistent with this Section and Florida Statutes § 812.14. Any Person violating the provisions of this Section shall be subject to a tampering fee, as established by a Resolution of the City.

111.07 (C) ***BDD.*** In addition to subsection (A) above, the prohibitions in the City of Sunrise Code of Ordinances regarding tampering or damage to Utility facilities of the Sunrise Utility system shall also apply.

§ 111.08 MODIFICATION OF SERVICE CONNECTIONS AND LATERALS.

111.08 (A) ***ITDD.*** If the Capacity of an existing Service Lateral or an existing Service Connection within the ITDD Utility system is inadequate to provide the quantity of service needed by a customer, the modification shall be performed by the City or its approved agent, and the property Owner shall reimburse the City, or its agent, for all costs actually incurred by the City.

111.08 (B) ***BDD.*** Any modifications to Service Connections and laterals owned by the Sunrise Utility system shall comply with the City of Sunrise Code of Ordinances regarding Utilities.

§ 111.09 FEES.

111.09 (A) ***ITDD.***

111.09 (A)(1) ***Connection and usage.*** Fees for connection and usage of the water and Sewer Systems in the City shall be established by resolution of the City Commission.

111.09 (A)(2) ***Certifications for backflow prevention devices.*** Fees for the processing of certifications for backflow prevention devices shall be established by resolution of the City Commission.

111.09 (A)(3) ***Utility deposits.*** Utility deposit amounts shall be established by resolution of the City Commission, and shall not be refundable until the Utility account is satisfied and closed.

111.09 (B) ***BDD.*** Fees for connection and usage of the Sunrise Utility system are set forth in the City of Sunrise Code of Ordinances regarding Utilities.

§ 111.10 PENALTIES FOR ILLEGAL USE OF POTABLE WATER.

111.10 (A) ***ITDD.***

111.10 (A)(1) ***Penalties.*** Penalties for illegal use of Potable Water in the City are as follows:

111.10 (A)(1)(a) First occurrence: $1,000

111.10 (A)(1)(b) Each additional occurrence: $5,000

111.10 (A)(2) ***Removal of meter.*** If a permanent water meter is moved to an unauthorized location, the meter in question shall be removed by the Owner of the Utility System and a fee, set by the ITDD, shall be charged for reinstallation of one meter.

111.10 (B) ***BDD.*** Penalties associated with illegal use of Potable Water supplied by the Sunrise Utility system are set forth in the City of Sunrise Code of Ordinances regarding Utilities.

§ 111.11 UTILITY SERVICE CUSTOMERS, RESIDENTIAL.

111.11 (A) ***ITDD.*** For residences provided service by ITDD, only the Owner of a property where Utility service is obtained for use in Dwelling Units may be a residential customer of the Utility, even if that property is occupied by residents other than the Owner. A Tenant of a Residential Property where Utility service is provided may not contract directly with the Utility for use of the Utility service.

111.11 (B) ***BDD.*** Residences provided service by the Sunrise Utility system shall comply with the City of Sunrise Code of Ordinances regarding permitted contractual relationships for Utility service.

WATER

§ 111.20 WATER SHORTAGE MANAGEMENT.

111.20 (A) ***ITDD.***

111.20 (A)(1) ***Intent; purpose.*** It is the intent and purpose of this Section to protect the Water Resources in the City from the harmful effects of over-utilization during periods of water shortage and allocate available water supplies in accordance with the South Florida Water Management District water shortage plan.

111.20 (A)(2) ***Application.*** The provisions of this Section shall apply to all Persons using the Water Resource within the geographical areas subject to a water shortage or Water Shortage Emergency, as determined by the South Florida Water Management District, whether from public or privately-owned water Utility systems, private wells or private connections with surface water bodies.

111.20 (A)(3) ***Adoption of water shortage plan.*** Chapter 40E-21, Florida Administrative Code is incorporated herein by reference as a part of this Code.

111.20 (A)(4) ***Declaration of water shortage or Water Shortage Emergency.*** The City Manager shall declare that a water shortage or Water Shortage Emergency exists within the City, upon such declaration of the South Florida Water Management District or the Florida Department of Environmental Protection. Such declaration shall invoke the provisions of this Section. Upon such declaration, all water use restrictions or other measures adopted by the South Florida Water Management District and/or the Florida Department of Environmental Protection applicable to the City, or any portion thereof, shall be subject to enforcement action pursuant to this Section. Any violation of the provisions of Chapter 40E-21, Florida Administrative Code, State statute or any order issued pursuant thereto, shall be a violation of this Section.

111.20 (A)(5) ***Enforcement.*** The City Manager shall delegate appropriate personnel, agencies and departments of the City to diligently enforce the provisions of this Section and/or any restriction imposed by the South Florida Water Management District and/or the Florida Department of Environmental Protection.

111.20 (A)(6) ***Remedies cumulative.*** The rights, powers, and procedures set forth in this Section shall be supplemental to and cumulative to the rights, powers, and procedures set forth in this Chapter, the City Code, State statute or the Florida Administrative Code.

111.20 (B) ***BDD.*** Customers of the Sunrise Utilities system shall comply with the water use restrictions set forth in the City of Sunrise Code of Ordinances.

§ 111.21 ADEQUACY OF WATER QUANTITIES AND PRESSURES.

111.21 (A) ***Extensions in ITDD.*** All extensions to the ITDD water system constructed by an Owner/developer shall be designed and constructed to provide at least that capability in every area that may be served by the extension. However, nothing in this Code shall be construed as a guarantee, expressed or implied, that either the Utility or an Owner/developer shall provide any specific quantity or pressure of water.

111.21 (B) ***Extensions in BDD.*** All extensions to the BDD water system shall comply with the City of Sunrise Code of Ordinances regarding Utilities.

111.21 (C) ***Inadequate quantity or pressure.*** It shall be the responsibility of each property Owner/developer to ascertain the quantity and pressure actually available to the property. In the event the property Owner/developer believes the quantity or pressure is not adequate for his

or her purposes, then the property Owner/developer shall construct, operate, and maintain on his or her own property such auxiliary pumping and storage facilities as he or she deems appropriate for his or her needs, subject to approval by the ITDD or the City of Sunrise, as applicable.

§ 111.22 FIRE SERVICE CONNECTIONS.

111.22 (A) ***Separate fire Service Connections.*** Any customer operating Structures that have a required Fire Flow greater than 1,000 gallons per minute may request that he or she have one or more separate fire Service Connections. If provided, the customer shall provide two separate Plumbing systems on his or her property, one for normal water uses connected to his or her standard Service Connection, and a second system connected to the fire Service Connection.

111.22 (B) ***Exclusively for fire-fighting purposes.*** A fire Service Connection and the Plumbing attached to it shall be reserved exclusively for fire fighting. The fire Service Connection shall include a backflow preventer, and there shall be no connection of any kind between the Owner's fire Plumbing and any Plumbing connected to the standard Service Connection. The fire Service Connection shall include a double weighted check valve fitted with a bypass having a detector meter. No water shall be drawn from a fire Service Connection except for fire fighting purposes and periodic tests of the fire systems. A City representative shall be present for all tests, and City representatives shall be allowed unlimited access to inspect any and all portions of the fire system.

§ 111.23 BACKFLOW PREVENTION.

111.23 (A) ***ITDD.***

111.23 (A)(1) ***Certification.*** An approved backflow prevention device, consistent with the requirements of the Code, is required on all Service Connections to the ITDD water lines. Along with the installation of a backflow device, all non-residential customers shall be required to have their potable and fire line backflow devices certified at the time of installation and tested annually. A passing certification from a certified backflow prevention testing company shall be provided to the Utility indicating compliance and shall be submitted to the Utility during the month of January each Year. Certifications must be dated during the Year prior to the submission of the certification to the Utility. Failure to comply with this Section shall result in termination of water service to the customer until the violation of this Section is cured.

111.23 (A)(2) ***Compliance.*** All devices shall adhere to the requirements of the City and Rule 62-555 Florida Administrative Code.

111.23 (B) ***BDD.*** Customers of the Sunrise Utilities system shall comply with the City of Sunrise Code of Ordinances and Rule 62-555 Florida Administrative Code regarding backflow prevention.

§ 111.24 TEMPORARY WATER METERS.

111.24 (A) ***ITDD.***

111.24 (A)(1) Temporary water meters shall only operate when there is an active Building Permit for the property at which water from the temporary water meter will be used.

111.24 (A)(2) Application for a temporary water meter shall be accompanied by a deposit and installation/removal fee in an amount set forth by Resolution of the City Commission.

111.24 (A)(3) Temporary water meters shall be installed solely by the City.

111.24 (A)(4) If an applicant requests and/or the City determines that a temporary water meter be relocated, the temporary water meter shall be relocated solely by the City.

111.24 (A)(5) If a temporary water meter is lost, stolen or damaged, an applicant forfeits the full deposit.

111.24 (A)(6) No Temporary Certificate of Occupancy, Certificate of Occupancy or Certificate of Completion for the property at which the water from the temporary water meter is used shall be issued for that property until the temporary water meter has been retrieved by the City and the Utility account for the temporary water meter is paid in full.

111.24 (B) ***BDD.*** Temporary water meters are under the jurisdiction of the City of Sunrise and are subject to the City of Sunrise Municipal Code of Ordinances, policies and procedures.

SEWER

§ 111.30 PROHIBITED DISCHARGES.

It shall be unlawful for any Person knowingly to Discharge any substance as set forth in Chapter 27 of the Broward County Code of Ordinances or set forth in the Florida Administrative Code, Chapter 62-625, into any Sewer System.

§ 111.31 PROHIBITED DISCHARGE STANDARDS.

111.31 (A) ***ITDD.*** The following discharge standards apply to the ITDD Utility system:

111.31 (A)(1) ***General prohibitions.*** No user shall introduce or cause to be introduced into the Publicly Owned Treatment Works ("POTW") any pollutant(s) or Wastewater that causes Pass Through or Interference. These general prohibitions apply to all users of the POTW whether or not they are subject to categorical Pretreatment standards or any other national, State, or local Pretreatment standards or requirements.

111.31 (A)(2) ***Specific prohibitions.*** No user shall introduce or cause to be introduced into the POTW the following pollutants, substances, or Wastewater:

111.31 (A)(2)(a) Any gasoline, benzene, naphtha, fuel oil, or other flammable pollutants which create a fire or explosive hazard in the POTW, including, but not limited to, wastestreams with a closed-cup flashpoint of less than 140°F (60°C) using the test methods specified in 40 CFR 261.21;

111.31 (A)(2)(b) Wastewater having a pH less than 5.5 or more than 9.5, or otherwise causing corrosive structural damage to the POTW or equipment;

111.31 (A)(2)(c) Solid or viscous substances in amounts that will cause obstruction of the flow in the POTW resulting in Interference, but in no case solids greater than one-half inch in any dimension;

111.31 (A)(2)(d) Pollutants, including oxygen-demanding pollutants (BOD, etc.), released in a discharge at a flow rate and/or pollutant concentration which, either singly or by interaction with other pollutants, will cause Interference with the POTW;

111.31 (A)(2)(e) Wastewater having a temperature greater than 150°F (65.5 °C), or that will inhibit biological activity in the treatment plant resulting in Interference, but in no case Wastewater that causes the temperature at the introduction into the treatment plant to exceed 104°F (40°C);

111.31 (A)(2)(f) Petroleum oil, nonbiodegradable cutting oil, or products of mineral oil origin, in amounts that will cause Interference or Pass Through;

111.31 (A)(2)(g) Pollutants which result in the presence of toxic gases, vapors, or fumes within the POTW in a quantity that may cause acute worker health and safety problems;

111.31 (A)(2)(h) Trucked or hauled pollutants, except at discharge points designated by the City Engineer;

111.31 (A)(2)(i) Noxious or malodorous liquids, gases, solids, or other Wastewater which, either singly or by interaction with other wastes, are sufficient to create a public nuisance or a hazard to life, or to prevent entry into the Sewers for maintenance or repair;

111.31 (A)(2)(j) Wastewater that imparts color that cannot be removed by the treatment process, such as, but not limited to, dye wastes and vegetable tanning solutions, which consequently imparts color to the treatment plant's effluent;

111.31 (A)(2)(k) Wastewater containing any radioactive wastes or isotopes except in compliance with applicable State or federal regulations;

111.31 (A)(2)(l) Storm Water, surface water, ground water, artesian well water, Roof runoff, subsurface drainage, swimming pool drainage, condensate, deionized water, noncontact cooling water, and unpolluted Wastewater, unless specifically authorized by the City Engineer;

111.31 (A)(2)(m) Sludges, screenings, or other residues from the Pretreatment of industrial wastes;

111.31 (A)(2)(n) Medical Wastes, except as specifically authorized by the City Manager in a Wastewater discharge permit;

111.31 (A)(2)(o) Wastewater causing, alone or in conjunction with other sources, the treatment plant's effluent to fail a toxicity test;

111.31 (A)(2)(p) Detergents, surface-active agents, or other substances that may cause excessive foaming in the POTW;

111.31 (A)(2)(q) Fats, oils, or greases of animal or vegetable origin in concentrations greater than 100 mg/l; or

111.31 (A)(2)(r) Wastewater causing two readings on an explosion hazard meter at the point of discharge into the POTW, or at any point in the POTW, of more than 5% or any single reading over 10% of the lower explosive limit of the meter.

111.31 (B) ***BDD.*** Customers of the Sunrise Utilities system shall comply with the City of Sunrise Code of Ordinances regarding Sewer discharge regulations.

111.31 (C) ***Discharge to the POTW.*** Pollutants, substances, or Wastewater prohibited by this Section shall not be processed or stored in such a manner that they could be discharged into the POTW.

§ 111.32 EMERGENCY SUSPENSIONS.

111.32 (A) ***ITDD.*** The following emergency suspension procedures apply to the ITDD Utility system:

111.32 (A)(1) ***Suspension.*** The City Manager may immediately suspend a user's discharge, after informal notice to the user, whenever such suspension is necessary to stop an actual or threatened Discharge that reasonably appears to present or cause an imminent or substantial endangerment to the health or welfare of Persons. The City Manager may also immediately suspend a user's discharge, after notice and opportunity to respond, that threatens to interfere with the operation of the POTW, or which presents, or may present, an endangerment to the Environment. The City maintains the right to recover the costs associated with any suspensions, and the City may order the suspension of any further work, suspension of issuance of a Certificate Of Occupancy, or lien the property until the costs are paid in full.

111.32 (A)(2) ***Result of suspension.*** Any user notified of a suspension of its discharge shall immediately stop or eliminate its contribution. In the event of a user's failure to immediately comply voluntarily with the suspension order, the City Manager may take such steps as deemed necessary, including immediate severance of the Sewer connection, to prevent or minimize damage to the POTW, its receiving stream, or endangerment to any individuals. The City Manager may allow the user to recommence its discharge when the

user has demonstrated to the satisfaction of the City Manager that the period of endangerment has passed.

111.32 (A)(3) ***No hearing required.*** Nothing in this Section shall be interpreted as requiring a hearing prior to any Emergency suspension under this Section.

111.32 (B) ***BDD.*** The Emergency procedures for customers in the BDD are set forth in the City of Sunrise Code of Ordinances regarding Utilities.

§ 111.33 STATE PRETREATMENT STANDARDS.

State pretreatment standards located in the Florida Administrative Code, Volume 19, Chapter 62-625, are incorporated for the ITDD and Sunrise Utility systems within the City.

§ 111.34 GREASE TRAPS.

111.34 (A) ***ITDD.*** The following Grease Trap regulations apply to the ITDD Utility system:

111.34 (A)(1) ***Requirement.*** Any facility engaged in operations producing greasy wastes, including but not limited to preparation or serving of food for consumption by more than one family, shall install and operate below-ground Grease Traps sufficient to ensure compliance with this Chapter.

111.34 (A)(2) ***Approval.*** All Grease Traps installed or replaced after October 1, 2002, shall be below-ground and of a type and Capacity approved by the City, Broward County Building Code, Florida Building Code, and the Florida Department of Health, as applicable, and shall be located so as to be readily and easily accessible for cleaning and inspection.

111.34 (A)(3) ***Maintenance.*** Grease Traps shall be maintained in proper working condition at all times, cleaned on a schedule that assures continued proper functioning, and repaired, as needed, at the Owner/operator's expense.

111.34 (B) ***BDD.*** Customers of the Sunrise Utilities system shall comply with the City of Sunrise Code of Ordinances regarding Grease Traps.

§ 111.35 INFILTRATION AND INFLOW.

111.35 (A) ***ITDD.*** No Person shall intentionally introduce groundwater infiltration or surface inflow of Storm Waters into the Sewer System. Plumbing to connect to the Sewer System shall be designed, constructed, and maintained in such a manner as to prevent such occurrences. If analysis by the City indicates that infiltration or inflow is entering the system through privately owned Plumbing, the customer shall be required to repair or modify his or her Plumbing, at his or her sole expense, to eliminate infiltration and inflow. Failure to comply shall result in a surcharge being added to the customer's monthly service charge. The surcharge shall be equal to the then-existing rate per thousand gallons times the City's estimate of thousands of gallons of infiltration/inflow entering the system through the customer's Plumbing.

111.35 (B) ***BDD.*** Customers of the Sunrise Utilities system shall comply with the City of Sunrise Code of Ordinances regarding infiltration and inflow.

§ 111.36 PORTABLE TOILET FACILITIES.

111.36 (A) ***General prohibition.*** The use of Portable Toilet Facilities shall be prohibited in all zoning districts, except during periods of approved Construction permitted by the City or during an event for which a private use permit or a special Public Property event permit has been issued by the City.

111.36 (B) ***Requirements.*** Portable Toilet Facilities shall comply with the following:

111.36 (B)(1) Portable Toilet Facilities that are utilized in connection with a Building Permit must be located within 200 feet walking distance of the work site which it serves. One unit may serve workers during active approved Construction for up to four work sites, if all work sites are within 200 feet walking distance of the unit. Location, sanitary maintenance, and use of the unit are the responsibility of the "builder of record" of the Lot on which the unit is located.

111.36 (B)(2) Portable Toilet Facilities shall be installed in a reasonably level position and be easily accessible to users.

111.36 (B)(3) Portable Toilet Facilities shall not be located upon any Street or Public Right-Of-Way in the City.

111.36 (B)(4) Portable Toilet Facilities shall be located upon natural ground and not on an impervious surface such as asphalt or concrete.

111.36 (B)(5) Portable Toilet Facilities must be cleaned and serviced by a licensed Non-Sewer Toilet System (NSTS) service at least twice per week, or more frequently as needed to maintain a sanitary use Environment.

111.36 (B)(6) Portable Toilet Facilities shall be placed at a distance of at least 100 feet from any body of water, at the furthest point possible from any abutting occupied residence and installed in such a way as to ensure that there is no possibility of a spill or run-off into any body of water.

111.36 (B)(7) Portable Toilet Facilities shall only be located upon the permitted Building or event site.

111.36 (B)(8) All Portable Toilet Facilities shall be removed or Secured within a permanent Structure in the event a Hurricane Watch is issued by the appropriate governmental entity with the authority to issue a watch.

TITLE XII: LAND USE

CHAPTER 120. REAL PROPERTY TRANSFERS, EASEMENTS AND ENCROACHMENTS.

§ 120.01 TRANSFER OF REAL PROPERTY INTEREST TO CITY.

Every deed, easement or other document conveying, transferring or dedicating an interest in real property to the City for any purpose must be in a form and substance as prescribed by applicable Law and otherwise acceptable to the City Attorney, and must be accepted by the City Commission.

§ 120.02 ENCROACHMENT UPON EASEMENTS PROHIBITED.

120.02 (A) ***Encroachment prohibited on lake maintenance and lake access easements.*** No Encroachment, whether temporary or permanent in nature, with the exception of grass, shall be permitted in lake maintenance easements and lake access easements.

120.02 (B) ***Limitations of Encroachments on Utility and drainage easements.*** No Encroachment, whether temporary or permanent in nature, shall be permitted over any Utility or drainage easement, except:

120.02 (B)(1) Grass, Ground Cover, or Shrubs,

120.02 (B)(2) Landscaping Features and fences (except for concrete fences), provided that:

120.02 (B)(2)(a) consent is obtained from the respective Utilities and the drainage district or entity to which the property is dedicated.

120.02 (B)(2)(b) The installation is placed in the easement at the property Owner's risk, and the Utilities and drainage district or entity to which the property is dedicated will have no obligation to replace or repair damage to Landscaping or fences within easements in the event such damage is caused as a result of work performed by the Utilities or drainage district within the easement.

120.02 (C) ***Removal of Encroachments.***

120.02 (C)(1) Any prohibited Encroachment on any Utility, drainage, lake access or lake maintenance easement shall be removed by the Owner of the property, at the property Owner’s expense, within 30 days after written notice by the City, except in the event of an Emergency. Upon such Owner's failure to comply with such notice within the time specified in such order, the City may remove such Encroachment, by whatever means necessary, at the property Owner's expense.

120.02 (C)(2) In the event of an Emergency as determined by the City, the property Owner shall immediately remove the Encroachment. If the property Owner fails to remove the Encroachment, the City may remove such Encroachment, by whatever means necessary, at the property Owner's expense.

§ 120.03 COMMON AREA TRANSFERS TO CITY.

120.03 (A) ***Criteria required***. In those cases where a Homeowners' or condominium Association desire to transfer a Common Area to the City, the Applicant, shall provide the City with sufficient written documentation demonstrating that the property meets each of the following criteria:

120.03 (A)(1) The property must abut an existing Public Right-Of-Way or property currently owned by the City;

120.03 (A)(2) The property and improvements must currently be in compliance with the Comprehensive Plan, all applicable City Code provisions, ordinances and City policies;

120.03 (A)(3) The property must currently be in compliance with a new or approved site plan;

120.03 (A)(4) All improvements on the property must have, at a minimum, ten Years of remaining useful life;

120.03 (A)(5) If the property is served by an existing common service (Irrigation, electric, water, Sewer, etc.) provided from Private Property, it must be connected with an existing or new service on City property or a Right-Of-Way (any such reconnection must be completed prior to transfer at the Applicant's expense);

120.03 (A)(6) If the property includes any paved Right-Of-Way, the Right-Of-Way drainage must be into a City owned system;

120.03 (A)(7) A financial and operating analysis by the City must show that accepting the property will not have a material negative impact on the City;

120.03 (A)(8) A Phase 1 environmental report must be submitted showing no contamination on the property;

120.03 (A)(9) An opinion of counsel, acceptable to the City Attorney, must be submitted showing that the Association has complied with all requirements of any homeowners' documents for the transfer of such property;

120.03 (A)(10) Any provision of the homeowners' documents notwithstanding, the transfer must be approved by at least 66 % of the Owners in the Association; and

120.03 (A)(11) The Association shall provide the City with an agreement acceptable to the City Attorney to indemnify, defend, and hold harmless the City, its officers, agents, and employees, from and against any and all claims, suits, actions, damages, liabilities, expenditures, or causes of action of any kind arising prior to the transfer to the City.

120.03 (B) ***Approval by City Commission***. Any transfer of Common Areas to the City requires the approval of the City Commission.

120.03 (C) ***Deed requirement.*** If approved by the City Commission, any such transfer shall be in a form acceptable to the City Attorney.

120.03 (D) ***Maintenance bond required for equipment transfer***. If any equipment on or under the property is transferred, the Association must provide the City with a one Year cash maintenance bond, in a form acceptable to the City Attorney, covering the equipment in an amount determined by the City.

120.03 (E) ***Cost recovery deposit.*** All applications for transfer of Common Areas to the City shall be subject to cost recovery to cover the amounts expended by the City in consideration of the application and must be accompanied by a cost recovery deposit. The amount of the cost recovery deposit shall be set and amended by resolution of the City Commission.

CHAPTER 121. EXCAVATION AND MINING.

§ 121.01 PROHIBITION ON BLASTING.

Blasting, including resource extraction, mining or other Excavations with Blasting, is prohibited within the City.

§ 121.02 EXCAVATION OR MINING WITHOUT BLASTING.

The Excavation or mining of sand, gravel, rock, and the operation of a stone pit or quarry or other operation involving the extraction or mining of natural material is prohibited, except as set forth in this Section. Excavation or other operations (without blasting) involving the extraction of sand, gravel, rock, or other natural material that is undertaken by a landowner to create canals, waterways, or lakes or that is necessary in order to develop that property in accordance with an approved Development Order is permitted, provided, however, that a landowner undertaking such Excavation shall use the material produced for backfill, grading, or such other purposes as required for the Development of the property. The landowner shall be entitled to remove surplus material from the property. The landowner shall not Excavate below those levels necessary to provide proper drainage and that quantity of material necessary to build drainage pads and roads for the property.

CHAPTER 122. TREE PRESERVATION.

ADMINISTRATION AND PERMIT PROCEDURE

§ 122.01 PURPOSE.

The purpose of this Chapter is to perpetuate the protection, preservation, and conservation of existing Trees, natural areas, and Landscaped open space as an effective means of conserving energy and to preserve Trees to improve the aesthetic quality of the City thereby promoting the health and general welfare of the citizenry. Owing to these many benefits provided by Trees, it is the intent of the City to protect this valuable resource through permitting for Tree Removal. In the evaluation of a Tree Removal permit, priority shall be given to protected Trees for the preservation or relocation, replacement, and/or payment into the Weston Tree Trust Account. In addition, it is the policy of the City Commission that every effort shall be made to preserve and maintain natural vegetation within the City as identified in the City's Comprehensive Plan.

§ 122.02 INTERPRETIVE PUBLICATIONS.

For the purpose of this Chapter, the definitions in Chapter 1 shall apply unless the context clearly indicates or requires a different meaning. In construing the provisions of this Chapter, if no definition is provided herein and when the context will permit, publications recognized as authoritative in the scientific and engineering fields shall apply. Such publications shall include:

122.02 (A) "Dig Manual" by the State of Florida,

122.02 (B) "Tree, Shrub and Other Woody Plant Maintenance - Standard Practices," by the American National Standards Institute (ANSI A300),

122.02 (C) "Z-133.1, Pruning, Repairing, Maintaining, and Removing Trees, and Cutting Brush Safety Requirements,"

122.02 (D) Florida Department of Agriculture publication, "Grades and Standards for Nursery Plants," Parts I and II, Florida Urban Forestry Council,

122.02 (E) "Selecting and Planting Trees for the South Florida Urban Forest,"2000,

122.02 (F) Richard Harris, "Arboriculture Integrated Management of Landscape Trees, Shrubs and Vines,"

122.02 (G) Gary W. Watson and E.B. Himelick, "Principles and Practices of Planting Trees and Shrubs," and

122.02 (H) Florida Power and Light's "Plant the Right Tree in the Right Place" brochure.

§ 122.03 APPLICABILITY AND EXEMPTIONS.

122.03 (A) ***Applicability.*** All Trees shall be subject to the provisions of this Chapter unless specifically exempt as set forth below.

122.03 (B) ***Exceptions.***

122.03 (B)(1) Where existing Trees need to be removed or relocated due to a conflict with Utilities or a Roadway improvement project within the Public Right-Of-Way, a Tree Removal/relocation permit shall be required, notice shall be provided to the City and property Owner not less than six weeks prior to any removal or relocation activity, but no fees or bonds shall be required. Relocated and removed Trees shall be replaced where applicable in accordance with this Chapter.

122.03 (B)(2) State of Florida licensed plant and/or Tree nurseries shall be exempt from the terms and provisions of this Chapter only in relation to those Trees planted and growing On-Site for wholesale and/or retail sale purposes in the ordinary course of said permit holder's business.

122.03 (B)(3) Trees less than 1½ inches in diameter as measured 4½ feet from grade are exempt from the provisions of this Chapter unless they are located within the Dripline of preserved Trees. All Native Trees less than 1½ inches Diameter Breast Height ("DBH") located within the Drip Line of preserved Trees shall be illustrated on Tree Protection/Dripline Encroachment Plans as a plant mass and not individual Trees.

122.03 (B)(4) Removal or relocation of any Tree on residential properties with existing detached Single-Family or Duplex Structures (other than a specimen Tree, preserved Tree, replacement Tree, or relocated Tree that requires a permit) shall be exempt from this Chapter, however, compliance with the Landscaping Chapter of the Code is still required.

122.03 (B)(5) Trees that have been determined by the City to be dead are exempt from the permit and fee requirements of this Chapter.

§ 122.04 PERMITS.

122.04 (A) ***Permit requirement.*** The removal or relocation of any Tree requires a Tree Removal/relocation permit from the City. No permit shall be issued for Tree Removal/relocation unless the City determines that there are no other means to prevent the removal/relocation of the Tree(s) (including, but not limited to, canopy trimming, root Pruning and installation of root barriers), and that one of the following exists:

122.04 (A)(1) A site plan submitted by the Applicant shows that a proposed Structure, permissible under all applicable Laws and regulations, can be situated on the subject parcel only if specific Trees are removed or relocated, and the Applicant has made every reasonable effort to incorporate and/or relocate existing Trees and to minimize the number of Trees removed.

122.04 (A)(2) The Tree is in such proximity to existing or proposed Structures that the Utility or structural integrity of such Structures is materially impaired.

122.04 (A)(3) The Tree materially interferes with the location, servicing, or functioning of public Utility lines or service.

122.04 (A)(4) The Tree obstructs safe vehicular cross-visibility or otherwise creates a substantial traffic hazard.

122.04 (A)(5) The Tree is diseased, injured, or in danger of falling.

122.04 (A)(6) Any Law or regulation requires the Tree's removal.

122.04 (A)(7) The vegetation is being maintained or planted for municipal use under the direction of the City.

122.04 (B) ***Application for permit.*** The Owner of the property on which the Tree will be removed or relocated from must make an application for a Tree Removal/relocation permit required or authorized under this Chapter. Where the Tree is relocated on property with different ownership then its original location, then the Owner of the relocated property shall obtain a permit at no cost. If any Person will be acting as agent for the property Owner, the application must clearly indicate, by affidavit of the Owner, that the Owner has given the agent full authority to bind the Owner to any condition that may be imposed upon the issuance of the permit. Applications for a Tree Removal/relocation permit shall be accompanied by the following:

122.04 (B)(1) A completed, signed, and notarized application.

122.04 (B)(2) A map showing the size and location of the site where the permitted activities are to be conducted.

122.04 (B)(3) A starting date and duration of the proposed permit activities.

122.04 (B)(4) A brief description of the work to be performed, including a drawing of the proposed work on a certified site plan as determined by the City, showing the location of all existing or proposed Buildings, Structures, and site uses.

122.04 (B)(5) A Tree Survey performed no more than six months before the application date and certified by a Landscape Architect, and a site plan of identical scale designating those Trees that are proposed to be preserved, relocated, or removed. This subsection (5) shall not apply to Single Family and Duplex properties, unless a proposed expansion or demolition negatively impacts a specimen Tree, which shall be determined in the sole discretion of the City.

122.04 (B)(6) A Dripline Encroachment plan shall be required for all Trees whose Dripline is planned to be encroached upon by any Construction, Excavation, fill, or other activities associated with the Development of the site. The Dripline Encroachment plan shall include:

122.04 (B)(6)(a) a designation of each Tree subject to any Dripline Encroachment;

122.04 (B)(6)(b) the reasons for the Encroachment;

122.04 (B)(6)(c) a detailed description of the proposed efforts to protect the Tree from damage due to the Encroachment; and

122.04 (B)(6)(d) a plan to ensure survivability per the "Tree Protection Manual for Builder's and Developers" by the Department of Agriculture.

122.04 (B)(7) The certified legal description of the site.

122.04 (C) ***Application fee.***

122.04 (C)(1) All applications for a Tree Permit shall be accompanied by the application fee in the amount set forth by a resolution of the City Commission.

122.04 (C)(2) The application fee is not refundable and may not be applied to any permit application other than the one for which it was originally paid.

122.04 (D) ***Inspections.*** An application for a Tree Removal/relocation permit constitutes consent by the property Owner and/or Applicant for the City to conduct site inspections in furtherance of this Section on the subject property, pursuant to permit requirements.

122.04 (E) ***Permit Fees***. Upon approval of the application and prior to the issuance of a permit, the Applicant shall pay a permit fee to the City in the amount(s) set forth by a resolution of the City Commission.

122.04 (F) ***Permit term.*** The permit shall be granted for a maximum of six months from the date of issuance or one Year from the approved relocation date. A one-time extension upon written request may be granted for an additional six month period, provided that there is no change from the original permit and the permit extension complies with all standards in effect at the time of the permit extension.

122.04 (G) ***Permit posting.*** The relocation/removal permit shall be posted in a protected area and in a conspicuous place on the site.

§ 122.05 TREE SURVEY.

Upon submission of a Building Permit or Tree Removal/relocation permit, the Applicant shall submit a sealed survey prepared by a Florida licensed land surveyor that shows all Trees, in addition to all boundary information, with the exact location. A Florida licensed Landscape Architect or International Society of Arboriculture (ISA) certified Arborist shall provide the information for the existing Trees On-Site which shall include: botanical and common name, height, canopy spread illustrated on the plan, and diameter of all Trees at least 1½ inches in diameter measured 4½ feet above ground level within the area affected by the Development. Groups of nuisance Trees as defined herein may be designated as "clumps," with the predominant type shown. The expense of the survey shall be borne by the Applicant. The requirements set forth herein are requirements for all sites with existing Trees, and shall be noted as the Tree Protection/Encroachment Plan.

§ 122.06 ADDITIONAL WETLANDS PERMITS REQUIRED.

Prior to any land clearing activity in a potential or existing Wetlands area, as designated on the City's "Floodplains and Wetlands Map" of the Comprehensive Plan, a property Owner shall be responsible for obtaining the necessary permits from the applicable agency having jurisdiction, in addition to the permit required by this Code.

§ 122.07 ARBORIST REGISTRATION.

122.07 (A) All Tree Service Providers and Arborists performing work within the limits of the City shall be registered to do so with the City.

122.07 (B) Tree Service Provider and Arborist registration shall be valid for a period of one Year from the date of issuance and shall be subject to the fees set by resolution of the City Commission. Registrations are not transferable or refundable.

122.07 (C) Registered Tree Service Providers and Arborists shall maintain a copy of such registration On-Site for inspection when performing work within the City.

122.07 (D) A copy of the Business Tax Receipt(s) and valid insurance certificate(s) shall be required to obtain a City registration.

122.07 (E) Evidence shall be noted on the registration that proper training has been granted from the International Society of Arboriculture (ISA) and a Class A Tree trimmer license from Broward County for those companies and individuals that are registered Arborists. A Class B Tree trimmer license from Broward County is required for registration from those companies and individuals that are not certified Arborists.

122.07 (F) The City may revoke or deny renewal of a Tree Service Provider or Arborist registration if such Tree Service Provider or Arborist fails to conform to the Tree trimming standards prescribed hereof, or if found to have committed Tree Abuse as defined in Chapter 1 of the Code. Within ten days of receipt of written notice revoking registration or denying renewal, a request may be made for a hearing before the City Manager to review the decision of the City.

122.07 (G) Tree Service Providers and Arborists performing work within the City shall have the name as shown on their City registration clearly marked on each of their vehicles/equipment, and the address and phone number shall also be clearly denoted on the doors of the vehicle.

STANDARDS FOR RELOCATION AND REPLACEMENT OF TREES

§ 122.20 RELOCATION.

122.20(A) ***Standards for relocation.***

122.20 (A)(1) Any Tree being relocated shall not be damaged during removal, transport, or replanting of that Tree.

122.20 (A)(2) If the species has a dormant period, the Tree shall be relocated during that time.

122.20 (A)(3) Adequate space for root and crown development shall be provided.

122.20 (A)(4) An inspection is required prior to root Pruning and relocation. In addition, a final inspection is required after installation and/or relocation.

122.20 (A)(5) Trees shall be root Pruned according to sound arboricultural standards prior to relocation. Root Pruning utilizing mechanical methods such as backhoes or trenchers is prohibited, and shall constitute a violation of this Chapter. Root Pruning shall extend to the Dripline of the Tree to the maximum extent possible. Root Pruned Trees shall remain in place for a minimum of eight weeks prior to relocation. Manual watering shall be required during and following the root Pruning process until re-established. The root ball must be kept moist at all times.

122.20 (A)(6) All crown Pruning shall be minimized and done in accordance with standards set by the American National Standards Institute. No Pruning shall be done without prior City approval.

122.20 (A)(7) Trees and vegetation to be relocated during Construction or other Development activities shall be stored, staked, and irrigated in a suitable area with the granting of a Tree Permit. One-time relocation is preferred.

122.20 (A)(8) During and following relocation, the root ball and trunk shall be protected. The root ball shall be kept moist at all times.

122.20 (A)(9) Relocated Trees shall be braced for at least one Year or until establishment.

122.20 (A)(10) Relocated Trees shall be watered sufficiently and fertilized until the Tree growth is reestablished. All relocated Trees shall have Terrasorb and appropriate fertilizer applied to the planting soil at the time of relocation per the manufacturer's specifications.

122.20 (A)(11) Relocated Trees must be set in a clean soil mixture of 50% sand and 50% muck. All palms must be set in a clean soil mixture of 80% sand and 20% muck.

122.20 (A)(12) A written report including, but not limited to, how the relocation is proposed is required. Additionally, experience and references may be required.

122.20 (B) ***Bond Requirements.*** A permit holder shall post a Tree Bond with the City, which shall be held by the City for one Year from the approved relocation date to ensure Tree replacement in the event that Tree relocation or Dripline Encroachment results in the death of any Tree subject to a Tree Permit or for any Tree damaged or destroyed in any pre-development or Development activities. Such bond amount shall be determined by the City and shall be equal to twice the amount of the published trade wholesale price.

122.20 (C) ***Determination of condition of relocated Trees and release of Tree Bond.***

122.20 (C)(1) A registered Landscape Architect or certified Arborist shall determine the condition of each Tree one Year after the Tree was relocated or planted. This determination shall be in writing and submitted to the City for approval within 30 days of being made. Upon approval of the City that the relocation was successful, the Tree Bond posted for Tree relocation shall be returned to the Applicant.

122.20 (C)(2) Should any Tree die or be in a state of unnatural decline within one Year of being planted or relocated, the permit holder shall be required to replace the Tree within 60 days of that determination. The one-Year monitoring and approval period shall begin anew whenever a Tree is replaced. If that replacement Tree is found not to be viable at the end of the second yearly monitoring period, the permit holder may pay the appropriate amount into the Weston Tree Trust Fund as required in §122.25 in lieu of planting a third replacement Tree. If the permit holder fails to replace the Tree or to pay the appropriate amount into the Weston Tree Trust Fund within the 60 days, then the permit holder shall be in violation of this Chapter.

§ 122.21 REPLACEMENT.

122.21 (A) ***Designation of Tree types.*** Except for Trees that are determined by the City to be in poor condition, the following are Specimen Trees and all other Trees (including Trees in poor condition) are non-specimen Trees:

SPECIMEN TREES		
Botanical Name	**Common Name**	**Size**
Bismarckia nobilis	Bismarck	10 inches DBH or over
Phoenix canariensis	Canary Island Date	12 inches DBH or over
Phoenix dactylifera	Date Palm	12 inches DBH or over
Phoenix sylvestris	Sylvester Date	10 inches DBH or over
Quercus virginiana	Live Oak	12 inches DBH or over
Roystonea elata/regia	Royal	12 inches DBH or over
Any other Tree that has a DBH of 18 inches or greater, except (a) Non-native fruit Trees that are cultivated or grown for the specific purpose of producing edible fruit, including but not limited to: mangos, avocados, or species of citrus. (b) Species of the genus *Ficus* except *F. aurea* (strangler fig), *F. laevigata, F. citrifolia* (short leaf fig), *F. rubiginosa* (rusty fig), *F. nitida* (Cuban laurel) *F. jacquinfolia,* and Paurotis palm, and the Phoenix palm, which are less than 15 feet in height, and all other multi-trunk palms.		

122.21 (B) ***Specimen Trees.*** If it is determined by the City that relocation of specimen Tree(s) is not feasible, then payment shall be made into the Weston Tree Trust Fund or Florida Grade #1 replacement Tree(s) shall be required, at the sole discretion of the City. Payment shall be based on the value of the Tree(s), determined by "The Guide for Plant Appraisal," 8th Edition, as amended, by the Council of Tree and Landscape Appraisers. However, in no case shall the diameter inches of the replacement Tree(s) be less than the diameter inches of the removed specimen Tree(s). The replacement Tree(s) must be the largest available Tree from the City replacement list and a minimum of 50% of the replacement Trees must be native. All Native Trees shall be replaced with native species.

122.21 (C) ***Non-specimen Trees*** A removed non-specimen Tree shall be replaced with its equivalent Canopy Coverage as defined in the Equivalent Canopy Coverage Replacement Table set forth below. However, under no circumstance shall any Tree be replaced with a less than 300 replacement canopy area credit. The replacement Tree or Trees shall be a type of species having shade potential and other positive values, as described below on the Tree Replacement List, and at least equal Canopy Coverage replacement to that of the Tree being removed.

122.21 (C)(1) *Dicot and Conifer Trees.* Dicot and Conifer Trees shall be installed as Florida Grade No. 1 or better and pursuant to the Equivalent Canopy Coverage Replacement Table and Tree Replacement List provided below. A minimum of 50% native replacement Trees are required. However, all Native Trees shall be replaced with Native Trees, as approved by the City.

122.21 (C)(2) *Monocot Trees.* Monocot Trees shall be installed with a minimum of seven feet of grey wood, when planted, have an overall height of 20 feet, and be a grade of Florida No. 1 or better. A minimum of 50% native replacement Trees are required. However, all Native Trees shall be replaced with native species as defined in Chapter 1 of the Code, as approved by the City.

122.21 (D) *Tree replacement for non specimen Trees.*

When the City has determined that a non-specimen Tree cannot be successfully relocated or that cash payment in lieu of replacement is not acceptable, the Applicant shall replace the non-specimen Tree with the type of Tree specified in the Tree Replacement List, and with the equivalent Canopy Coverage specified in the Equivalent Canopy Coverage Replacement Table for non-specimen Trees.

TREE REPLACEMENT LIST FOR NON-SPECIMEN TREES	
Large Shade Trees: 16-18 ft. Overall Height, 6-8 ft. Spread, 5 ft. Clear Trunk, 3-3.5 inch DBH	
Botanical Name	***Common Name***
Bulnesia arborea	Verawood
Bursera simaruba	Gumbo Limbo
Calophyllum brasiliense	Beautyleaf
Calophyllum inophyllum	Mastwood
Ilex attenuata 'East Palatka'	Holly
Ilex cassine	Dahoon Holly
Lagerstromeia indica	Crepe Myrtle
Magnolia grandiflora 'Little Gem'	Magnolia
Magnolia grandiflora 'DD Blanchard'	Magnolia
Noronhia emarginata	Madagascar Olive
Quercus virginiana	Live Oak
Tamarindus indica	Tamarind
Taxodium distichum	Cypress

Shade Trees: 12-14 ft. Overall Height, 5-6 ft. Spread, 4.5 ft. Clear Trunk, 2.5-3 inch DBH	
Botanical Name	***Common Name***
Bulnesia arborea	Verawood
Bursera simaruba	Gumbo Limbo
Calophyllum brasiliense	Beautyleaf
Calophyllum inophyllum	Mastwood
Elaeocarpus decipiens	Japanese Blueberry
Ilex attenuata 'East Palatka'	Holly
Ilex cassine	Dahoon Holly
Lagerstromeia indica	Crepe Myrtle
Magnolia grandiflora 'Little Gem'	Magnolia
Magnolia grandiflora 'DD Blanchard'	Magnolia
Noronhia emarginata	Madagascar Olive
Quercus virginiana	Live Oak
Tamarindus indica	Tamarind
Taxodium distichum	Cypress

Small Trees: 10-12 ft. Overall Height, 4-5 ft. Spread, 4 ft. Clear Trunk, 2 inch DBH	
Botanical Name	***Common Name***
Capparis cynophallophora	Jamaican Caper
Clusia guttifera	Small Leaf Pitch Apple
Cordia boissieri	White Geiger
Elaeocarpus decipiens	Japanese Blueberry
Filicium decipiens	Japanese Fern Tree
Guaiacum sanctum	Lignum-vitae
Ilex 'Nellie Stevens'	Holly
Krugiodendron ferreum	Black Ironwood
Myrcianthes fragrans	Simpson Stopper
Sideroxylon salicifolium	Willow Bustic

Small Trees: 8-10 ft. Overall Height, 4 ft. Spread, 4 ft. Clear Trunk, 1.5 inch DBH	
Botanical Name	***Common Name***
Capparis cynophallophora	Jamaican Caper
Clusia guttifera	Small Leaf Pitch Apple
Cordia boissieri	White Geiger
Elaeocarpus decipiens	Japanese Blueberry
Filicium decipiens	Japanese Fern Tree
Guaiacum sanctum	Lignum-vitae
Ilex 'Nellie Stevens'	Holly
Krugiodendron ferreum	Black Ironwood
Myrcianthes fragrans	Simpson Stopper
Sideroxylon salicifolium	Willow Bustic

Large Palms: Minimum 7 ft. of Grey Wood	
Botanical Name	***Common Name***
Bismarckia nobilis	Bismarck
Carpentaria acuminata	Carpentaria
Cocos nucifera	Coconut
Livistona chinensis	Chinese Fan
Roystonea elata	Florida Royal
Roystonea regia	Royal
Phoenix canariensis	Canary Island Date
Phoenix dactylifera	Date Palm
Phoenix reclinata	Senegal Date
Phoenix sylvestris	Sylvester
Ptychosperma macarthurii	Macarthur
Sabal palmetto	Sabal
Veitchia montgomeryana	Montgomery
Veitchia winin	Winin
Wodyetia bifurcata	Foxtail

Small Palms: Minimum of 3 to 1 with 2 ft. of Grey Wood	
Botanical Name	***Common Name***
Hyophorbe lagenicaulis	Bottle
Hyophorbe verschaffeltii	Spindle
Thrinax morrisii	Key Thatch
Thrinax radiata	Florida Thatch

EQUIVALENT CANOPY COVERAGE REPLACEMENT TABLE FOR NON-SPECIMEN TREES	
Non-Specimen Trees	***Replacement Canopy Area Credit (In Square Feet or Palm for Palm)***
Large Shade Trees: 16-18 ft. tall, 6-8 ft. spread, 3-3.5 inch Diameter at Breast Height (DBH) and 5 ft. Clear Trunk (CT).	300
Shade Trees: 12-14 ft. tall, 5-6 ft. spread, 2.5-3 inch DBH, and 4.5 ft. CT.	150
Small Trees: 10-12 ft. tall, 4-5 ft. spread, 2 inch DBH and 4 ft. CT.	100
Small Trees: 8-10 ft. tall, 4 ft. spread, 1.5 inch DBH and 4 ft. CT.	75

PALM TREE REPLACEMENT LIST FOR NON-SPECIMEN PALM TREES	
Large Palms: minimum 7 ft. of grey wood.	Palm for Palm
Small Palms: minimum 3 to 1 with 2 ft. of grey wood.	Palm for Palm

122.21 (E) ***Determination of Canopy Coverage.*** The following are methods for Canopy Coverage determination:

122.21 (E)(1) Review of aerial photography,

122.21 (E)(2) On Site inspection, and/or

122.21 (E)(3) Review of Tree Survey.

122.21 (F) ***Nuisance Tree Removal.*** Nuisance Tree species removal requires one-to-one replacement rather than equivalent Canopy Coverage replacement. Melaleuca, Brazilian pepper, and Australian pine are exempt and do not need to be replaced.

§ 122.22 CASH PAYMENT.

122.22 (A) ***Replacement or payment***. When allowed by a Tree Removal Permit, any Tree that is removed and not relocated shall be replaced or payment shall be made in accordance with the requirements of this Chapter. As a condition of being granted permission to remove any Trees, the developer, property Owner, or other Applicant shall be required to replace such Trees, or the Applicant shall pay a replacement contribution into the Weston Tree Trust Fund, as determined in the sole discretion of the City. This payment, equal to the fair market value of the required Trees, shall be assessed for replacement Trees to total the equal DBH removed. The fair market value shall be established based upon published trade wholesale price lists with the appropriate multiplier representing maintenance, installation, warranty, and other costs factored in, and shall be paid by the Applicant after approval from the City.

122.22 (B) ***Exception.*** This Section shall not apply to specimen Trees.

§ 122.23 MAINTENANCE OF RELOCATED AND REPLACEMENT TREES.

122.23 (A) ***Timing for Tree relocation, replacement and maintenance.*** Trees must be relocated or replaced as specified by this Section within six months of the approval for Tree Removal/relocation; provided, however, if the Trees are to be removed/relocated to facilitate Construction or Development activities, said relocation or replacement must be completed prior to the issuance of a Certificate of Occupancy on the Construction, Development site, or phase of Development, as applicable. The Trees to be relocated or replaced On-Site or Off-Site Private Property or Public Property must be maintained in a healthy growing condition and guaranteed for a period of at least one Year from the approved relocation date or replacement Tree installation date.

122.23 (B) ***Tree replacement conditions.***

122.23 (B)(1) All Trees that are replaced within the City shall be on the Tree Replacement List and shall be Florida Grade No. 1 or better as set forth in the Florida Department of Agriculture publication "Grades and Standards for Nursery Plants," Parts I and II. Any deviations from the Tree Replacement List shall require City approval prior to installation.

122.23 (B)(2) Trees that are replaced within the City shall not interfere with existing or proposed Utilities either above or below ground. Any Tree proposed under overhead Utility lines must be approved by the City.

122.23 (B)(3) All replacement Trees shall be guyed and/or staked pursuant to sound horticultural practices. In addition, all stakes or guys must be removed within one Year of installation or Establishment as determined by the City.

122.23 (B)(4) All replacement Trees shall be planted in a Tree pit with a minimum of two times the root ball and shall be filled with a clean organic 50% muck and 50% sand planting soil mix. Any deviations shall require City approval. The root ball shall be flush or 10% higher than grade and all growbags/burlaps/wire baskets shall be removed prior to planting.

122.23 (B)(5) All Trees shall be watered and fertilized appropriately until established.

122.23 (B)(6) No Pruning shall be done without prior City approval. All Pruning shall be done in accordance with the provisions of the Code.

122.23 (B)(7) A pre-Tree inspection is required prior to planting replacement Trees. In addition, a final inspection is required after installation.

122.23 (B)(8) Under no circumstances shall Monocot Trees be utilized for equal Canopy Coverage or one to one replacement for Dicot or Conifer Trees.

122.23 (B)(9) For Tree replacement requirements of one to five Trees, a minimum of one species shall be utilized as a replacement Tree. For six to ten replacement Trees required, a minimum of two species shall be utilized. For 11 to 20 replacement Trees required, a minimum of three species shall be utilized. For 21 to 50 replacement Trees required, a minimum of four species shall be utilized. For 51 or more replacement Trees required, a minimum of five species shall be utilized.

122.23 (B)(10) For Trees removed pursuant to new or modified Developments, an additional 50% replacement shall be required.

122.23 (B)(11) A minimum of 50% shade Trees shall be utilized for all Tree replacements. In addition, larger shade Trees and larger palms may be required to match existing palms in a design.

122.23 (C) ***Methods for relocation.*** The following guidelines shall be utilized to ensure successful relocation of Trees designated for relocation:

122.23 (C)(1) Any Tree being relocated shall not be unnecessarily damaged during removal, transport, or replanting of that Tree.

122.23 (C)(2) If the Trees have a dormant period, they should be relocated during that time. Trees should not be relocated during periods of strong, dry, winter winds or during droughts.

122.23 (C)(3) Adequate space for root and crown development shall be provided.

122.23 (C)(4) An inspection is required prior to root Pruning and relocation. In addition, a final inspection is required after installation and/or relocation.

122.23 (C)(5) Trees shall be root Pruned according to sound arboricultural standards prior to relocation. Root Pruning utilizing mechanical methods such as backhoes or trenchers is prohibited, and shall constitute a violation of this Chapter. Root Pruning shall extend to the Dripline of the Tree to the maximum extent possible. Root Pruned Trees shall remain in place for a minimum of eight weeks prior to relocation. Manual watering shall be required during and following the root Pruning process until re-established. The root ball must be kept moist at all times.

122.23 (C)(6) All crown Pruning shall be minimized and done in accordance with standards set by the American National Standards Institute. No Pruning shall be done without prior City approval.

122.23 (C)(7) Trees and vegetation to be relocated during Construction or other Development activities shall be stored, staked, and irrigated in a suitable area with the granting of a Tree Permit. One-time relocation is preferred.

122.23 (C)(8) During and following relocation, the root ball and trunk shall be protected. The root ball must be kept moist at all times.

122.23 (C)(9) Relocated Trees shall be braced for at least one Year or until establishment.

122.23 (C)(10) Relocated Trees shall be watered sufficiently and fertilized until the Tree growth is reestablished. All relocated Trees shall have Terrasorb and appropriate fertilizer applied to the planting soil at the time of relocation per the manufacturer's specifications.

122.23 (C)(11) Relocated Trees shall be set in a clean soil mixture of 50% sand and 50% muck. All palms shall be set in a clean soil mixture of 80% sand and 20% muck.

122.23 (C)(12) A written report including, but not limited to, how the relocation is proposed is required. Additionally, experience and references may be required.

122.23 (C)(13)A pre-Tree inspection is required prior to root Pruning and relocation. In addition, a final inspection is required after installation.

§ 122.24 CREDIT FOR EXISTING TREES FOR REQUIRED LANDSCAPING.

Existing Trees in a good condition, as determined by the City, may be credited as provided below toward required Landscaping (not replacement Trees) provided that they are designated for protection on the Dripline Encroachment Plan on the final site plan and approved by the City.

DBH of Tree	***Credit***
6-10 in.	15 Plant Units
11-24 in.	20 Plant Units
25 in. and above	25 Plant Units

§ 122.25 TREE TRUST FUND.

The Weston Tree Trust Fund is hereby established as a depository for Tree Removal fees, replacement payments, contributions and penalty monies. The Weston Tree Trust Fund shall be utilized solely for the purpose of funding Tree replacement or related items on Public Property within the City.

§ 122.26 STANDARDS FOR TREE PROTECTION DURING DEVELOPMENT.

The following are minimum standards necessary to protect Trees designated for preservation from damage during Development activities after the Tree Permit has been approved:

122.26 (A) ***Protection of existing Trees.***

122.26 (A)(1) Prior to any clearing of improved, vacant, or unimproved land, unless specifically exempted from this Section, (including land designated for conservation by Broward County or as a preservation area by the City), Trees to be preserved shall have barriers constructed around each Tree or groups of Trees and Understory by the permit holder or land clearing Person to prevent physical damage from Heavy Equipment and other activities incidental to Development. Required barriers shall be subject to inspection by the City as a condition of permit approval and prior to any such clearing.

122.26 (A)(2) The barriers or barricades shall be:

122.26 (A)(2)(a) Large enough to include the entire area inside the outer edge or Dripline of the Tree.

122.26 (A)(2)(b) Conspicuous enough and high enough to be seen easily by operators of trucks and other equipment.

122.26 (A)(2)(c) Constructed of sturdy, orange, plastic barricading with supports placed every five feet as approved by the City based on professional judgment that the intent of this provision shall be met.

122.26 (A)(2)(d) Constructed as a condition of the issuance of any land clearing, Building, or other Development Permit and prior to any Construction or other Development activities and required to remain in place throughout the Construction period. Barriers or barricades shall be completely removed from the site at the end of the Construction period (immediately prior to the issuance of a Certificate of Occupancy by the City), unless otherwise stipulated in the approved Tree Protection/Dripline Encroachment Plan.

122.26 (B) ***Clearing Trees and vegetation.***

122.26 (B)(1) Within the Dripline of Trees designated for preservation, only clearing by hand is permissible, unless otherwise stipulated in the approved Tree Permit. Prohibited and exotic vegetation shall be removed by hand within the Dripline of existing Trees to be preserved.

122.26 (B)(2) All Trees and vegetation cleared and stored pursuant to this Section shall be removed within two days after completion of the clearing.

122.26 (C) ***Other requirements for the protection of Trees and Understory.*** The permit holder and any On-Site Person shall protect the Trees and Understory plants designated for preservation in the approved Tree Permit from hazardous materials poisoning, mechanical removal, Excavation, and grade changes to at least the following minimum standards:

122.26 (C)(1) Utility line trenches shall be routed away from Trees to an area outside the Dripline to the maximum extent possible.

122.26 (C)(2) Within the Dripline of existing Trees to remain, retaining walls and dry wells shall be utilized where needed to protect Trees from severe grade changes. For shallow fills, the fill material shall be gently sloped down to the level of the Tree roots leaving the Tree in a depression larger than the spread of its crown. In no instance, unless approved by the City, shall a maximum of six inches of fill be added within the Dripline of any Tree.

122.26 (C)(3) No parking, vehicle maintenance, storage of Construction materials or Debris, or cleaning of equipment shall take place within areas marked for preservation, specifically including, but not limited to, within the Dripline of any individual Trees designated to remain. For all parking and storage areas, the developer or contractor shall establish regular parking and storage areas under the supervision of the City to facilitate compliance with the above standard.

122.26 (C)(4) Encroachment into any barricaded area shall be strictly forbidden with the exception of activities specifically permitted by the approved Tree Permit including the Dripline Encroachment Plan as established herein.

122.26 (D) ***Pruning of protected Trees under site plan approval or Tree Removal/relocation permit.*** Per the approved Tree Permit and/or site plan process the permit holder shall be permitted to cut or Prune branches and roots of Trees designed for protection on the protection/Dripline Encroachment Plan only under the supervision of the City Inspector, who shall be notified 48 hours prior to the anticipated Pruning. The standards for Pruning as established by the American National Standards Institute (ANSI A300) shall be utilized for the Development site.

122.26 (E) ***Root system protection.*** The root system of Trees shall be protected as follows:

122.26 (E)(1) The City may approve a Dripline Encroachment Plan, upon an Applicant's request to Excavate within the Dripline of a Tree, as part of a Tree Permit.

122.26 (E)(2) The City reserves the right to establish additional standards for root protection to adapt to field conditions. If roots are exposed, the permit holder shall provide temporary earth cover mixed with peat moss and wrapped with burlap to prevent exposed roots from drying out before permanent backfill is placed. Support of Tree or root systems are critical. The permit holder shall also water, maintain in moist condition, and otherwise temporarily support and protect the Tree or root from damage until the Tree or root is permanently covered with earth.

122.26 (E)(3) The permit holder shall protect Tree root systems from damage due to noxious materials in solutions caused by runoff, spillage during mixing and placement of Construction materials, or drainage from stored materials. The permit holder shall also protect root systems from flooding, erosion, or excessive wetting resulting from dewatering operations.

122.26 (F) ***Trees damaged during Construction.***

122.26 (F)(1) The permit holder shall have Trees damaged by Construction immediately repaired by a professional Arborist in a manner acceptable to the City.

122.26 (F)(2) The City must be notified immediately if any damage occurs to any Tree due to Construction operations.

122.26 (F)(3) Such repairs as necessary shall be made promptly after damage occurs to prevent progressive deteriorations of damaged Trees.

122.26 (F)(4) The permit holder shall remove Trees which are determined by the City to be incapable of restoration to normal growth pattern. Such Trees shall be subject to replacement under the provisions of this Code.

122.26 (F)(5) Any Person damaging a Tree designated for Tree protection, which is damaged by Development activities, is in violation of this chapter (not including bonded Trees in a Dripline Encroachment Plan) under this subsection. Any Tree that dies as a result of this damage shall be subject to double the Tree replacement requirements contained herein. Additionally, this activity may result in a delay in release of the Certificate of Occupancy and/or Landscape acceptance.

122.26 (G) ***Pruning.***

122.26 (G)(1) *Tree Pruning*. All Trees shall be Pruned in accordance with ANSI standards for Pruning as established by the American National Standards Institute (ANSI A300). No Person shall abuse a Tree located within the City unless the abuse is limited to the minimum amount necessary to alleviate a dangerous condition posing an imminent threat to the public or property.

122.26 (G)(2) *Palm Pruning*. Many plants are not covered by Pruning guidelines of the National Arborist Association. Among them are palms and palm-like plants, such as cycads (zamia, sago, etc.). Most Pruning of this plant group amounts to the removal of leaves (called fronds), the inflorescence (flower spikes), remains of inflorescence, young seed

stalks, remains of seed stalks, and/or the fruits. Fronds that have dropped close to vertical position provide little or no benefit to the plant and generally shall be removed once they are dead (brown). From the plant's perspective, fronds shall not be removed until all traces of green are gone. The fronds should be cut close to the trunk with a sharp Pruning saw or lopping shears.

VIOLATIONS AND ENFORCEMENT

§ 122.40 TREE ABUSE.

122.40 (A) The following actions shall constitute Tree Abuse and shall be prohibited within the City:

122.40 (A)(1) Hatracking a Tree.

122.40 (A)(2) Pruning that reduces the height or spread of a Tree that has not attained a height or spread of 30 feet.

122.40 (A)(3) Cutting upon a Tree that destroys its natural habit of growth.

122.40 (A)(4) Pruning that leaves stubs or results in a flush cut; or splitting of limb ends.

122.40 (A)(5) Peeling or stripping of bark; or the removal of bark to the extent that if a line is drawn at any height around the circumference of the Tree, over one-third of the length of the line falls on portions of the Tree where bark no longer remains.

122.40 (A)(6) The use of climbing spikes, nails, or hooks, except for purposes of total Tree Removal or as specifically permitted by standards set by the American National Standards Institute (ANSI A300).

122.40 (A)(7) Pruning that does not conform to standards or recommendations set by the American National Standards Institute (ANSI A300), with the exception of palm Pruning, which shall allow no pruning of fronds above the horizontal plan.

122.40 (A)(8) Using nails or other piercing devices for the purpose of attaching signage or any object to a Tree.

122.40 (A)(9) Girdling of Trees by guying, staking, support, string trimmers, or non-removal of planting materials from root balls.

122.40 (A)(10) Lawn mower or mower deck damage inflicted on any portion of a Tree or palm.

122.40 (A)(11) Vehicular damage inflicted causing bark removal, Tree leaning, and/or destruction.

122.40 (A)(12) Structures being placed or constructed within or on a Tree.

122.40 (A)(13) Utilizing any portion of a Tree as a fence post or similar structural support.

122.40 (A)(14) Overlifting a Tree.

122.40 (A)(15) Shaping a Tree.

122.40 (A)(16) Removing palm fronds (other than dead, declining, or objectionable due to contractor interference with a Building or Utility).

122.40 (B) ***Prohibitions of Tree Abuse.*** No Person shall abuse a Tree located within the City unless the abuse is necessary to alleviate a dangerous condition posing an imminent threat to the public or property. Tree Abuse shall be limited to the minimum amount necessary to alleviate the dangerous condition.

§ 122.41 VIOLATIONS, ENFORCEMENT AND REMEDIAL ACTIONS.

122.41 (A)(1) The City shall make necessary inspections in connection with the enforcement of this Chapter. The City shall be responsible for promptly stopping any work attempted to be done without or contrary to any Tree Permit required under this Chapter; and shall further be responsible for ensuring that any work not in accordance with a Tree Permit is voluntarily corrected to comply with said requirements.

122.41 (A)(2) ***Enforcement authorities.*** The City Manager shall enforce the provisions of this Section.

122.41 (A)(3) ***Individual enforcement.*** Each violation of this Chapter is deemed a separate and distinct infraction of the City Code. Each Tree to be protected may be the subject of individual enforcement.

122.41 (B) ***Required actions***. The following remedial actions are required for removal, Pruning and Tree Abuse:

122.41 (B)(1) In the event a Person abuses a Tree in violation of this Chapter, the Person/Violator shall be responsible to undertake Pruning and other remedial actions that the City determines are reasonably necessary to protect public safety and property, and to help the Tree survive the Tree Abuse damage.

122.41 (B)(2) If the City determines that a specimen or non-specimen Tree will not survive and/or will not grow in a safe manner (i.e., threatens public safety or property) after the Tree Abuse damage with the aid of remedial Pruning, or the natural habit of growth has been destroyed, the Person/Violator shall remove the abused Tree and install a replacement Tree. The diameter inches of the replacement Trees shall be equal to the diameter inches of the abused Tree. The Tree or Trees shall be the largest available Tree species' in the State of Florida from the Recommended Tree List.

122.41 (B)(3) If the City determines that the specimen or non-specimen Tree Abuse damage was equal to or greater than 50% of the Tree's canopy, the Tree shall be removed and replaced. The diameter inches of the replacement Tree shall be equal to the diameter inches of the abused Tree. The Tree or Trees shall be the largest available Tree species' in the State of Florida from the Recommended Tree List.

122.41 (B)(4) Replacement Trees shall be installed on site or on public lands if such installation is approved by the City. If no suitable public lands are located or if all replacement Trees cannot be accommodated On-Site, the Person/Violator shall pay a fee into the Weston Tree Trust Fund. Each replacement Tree shall be a species found on the City's Recommended Tree List.

122.41 (B)(5) Remedial actions, replacement, or donation required under this Section shall be completed within 60 days of notice from the City that such actions are required. The City may require the Violator to immediately undertake remedial actions in the event the abused Tree is an immediate threat to the public or property.

122.41 (C) ***After the fact Tree Permit.*** In cases where the City determines that Tree Removal and/or relocation is carried out without the necessary permit under the terms and conditions of this Section, the property Owner shall be required to submit an application for an after-the-fact Tree Permit. The application fee shall be triple the regular application fee. The City Manager may grant an after-the-fact Tree Permit and shall require that each Tree destroyed is to be replaced by Trees of equal or greater equivalent replacement value. Such replacement Trees shall be located on the subject site wherever practical, or they may be required to be located on Off-Site on Private or Public Property. Such replacement Trees shall be assured by a cash bond. If the conditions for an after-the-fact Tree Permit are not fulfilled, the case shall be referred to the City Attorney's office for appropriate action under this Section.

122.41 (D) ***Cease and desist order.*** The City Manager shall immediately issue an order to cease and desist any work being carried out in violation of this Chapter or any permit conditions promulgated under this Chapter. Upon notice of such violation, no further work shall take place until appropriate remedial action is instituted, as determined by the enforcement agency.

§ 122.42 WITHHOLDING OR REVOCATION OF PERMITS AND APPROVALS.

Failure of any party to follow the procedures required by this Chapter shall constitute grounds for withholding or revoking site plan approval, planning and zoning permits, Certificate of Occupancy permits, or any other appropriate approvals necessary to continue Development. Such extraordinary sanctions, however, shall be instituted immediately upon the direction of the City Manager.

§ 122.99 PENALTY.

Each violation of this Chapter is deemed a separate and distinct infraction of the Chapter. Each violation of this Chapter shall be punishable in a court of competent jurisdiction by a fine of no more than $500 plus the cost of replacement of the Trees removed from the site, the costs

associated with investigation and prosecution, and any equitable remedies deemed reasonable and proper by the court (cost of replacement Tree in this context may be measured utilizing up to the removed Tree's DBH to determine its value or other such measures as deemed appropriate by the City). The removal, relocation, abuse or destruction, including Dripline Encroachment, of each Tree for which a Tree Permit is required in violation of this Chapter shall constitute a separate offense under this Chapter. Each Tree to be protected may be the subject of individual enforcement. The Owner of any property where a Tree or Trees have been cut down, destroyed, removed, relocated, destructively damaged or abused shall be held strictly liable for a violation of this Chapter unless it can be proven that the damage was caused by one of the following:

122.99 (A) An act of God.

122.99 (B) An act of war.

122.99 (C) Development activities on the property pursuant to an approved Tree Permit.

122.99 (D) Damage alleged by the Owner to have been caused by vandals or trespassers and the Owner of the property has filed a police report for the incident and had taken reasonable security measures to prevent unauthorized access to the property.

CHAPTER 123. LANDSCAPING.

DESIGN STANDARDS

§ 123.01. APPLICABILITY AND EXCEPTIONS.

A Landscape plan shall be submitted by the property Owner for all Development within the City, except the following:

123.01 (A) Enlargement or repair of a Single-Family detached Dwelling Unit.

123.01 (B) Portions of the property utilized for good faith agricultural Uses, including, but not limited to, licensed plant nurseries and grazing of livestock.

123.01 (C) Parking or Vehicular Use Areas located within or atop a Building.

§ 123.10. LANDSCAPE PLAN.

123.10 (A) ***Landscape plan requirements.*** Landscape plans and drawings shall be signed and sealed by a Landscape Architect. A digital and hard copy of all Landscape plans shall be submitted to the City for review. All Landscape plans shall meet the following requirements:

123.10 (A)(1) The Landscape plan shall be of the same scale as the site plan, but no smaller than 1 inch equals 50 feet, with 1 inch equals 20 feet recommended for all planting plans.

123.10 (A)(2) Landscape calculation table, on a form provided by the City, shall be shown on planting plans.

123.10 (A)(3) Concurrent with the submission of the Landscape plan, the Applicant shall submit a Tree Survey bearing the seal of a Landscape Architect indicating the location, number, names, DBH, species, size, disposition, and condition of all existing Trees and vegetation On-Site to be preserved, relocated, or removed. In the event there are no Trees On-Site, the Applicant shall submit a letter bearing the seal of a Landscape Architect stating that there are no existing Trees On-Site.

123.10 (A)(4) Location and outline of existing Buildings and site improvements to remain.

123.10 (A)(5) Location, condition, names, sizes, DBH, and disposition of existing Trees, Hedges, and any site improvements along any abutting properties within 25 feet of the property lines.

123.10 (A)(6) Location of all proposed or existing Buildings and site improvements, including but not limited to, parking spaces, access isles, driveways, Sidewalks and other Vehicular Use Areas to remain or be removed.

123.10 (A)(7) A proposed plant list by symbol, quantity, required specifications, native or non-native, drought tolerance, and botanical and common names. The plant list shall be indicated on all planting sheets.

123.10 (A)(8) Location and labeling of existing and proposed sight lighting.

123.10 (A)(9) Location and labeling of existing and proposed fire hydrants and Fire Department check valves.

123.10 (A)(10) Location of existing and proposed easements, Rights-of-Way, drainage Structures, overhead Utility wires, underground Utilities, controllers, above ground electrical elements, and transformers.

123.10 (A)(11)Location and details including type, height, color, and additional embellishment of walls, fence, gates, and Signs.

123.10 (A)(12) All planting and staking details, including but not limited to planting/staking specifications, general notes, and Tree protection details.

123.10 (A)(13) Existing and proposed water bodies and retention areas indicating the required 4 to 1 slope(s).

123.10 (A)(14) Existing and proposed berms indicating the required slopes.

123.10 (A)(15) Such other information that may be required to give a complete understanding of the proposed plan.

123.10 (A)(16) A zone layout plan (minimum scale one inch equals 20 feet).

123.10 (A)(17) An indication of headtype, specifications, and spacing.

123.10 (A)(18) An indication of methods used to achieve compliance with xeriscape principles as required by Florida Statutes § 166.048.

123.10 (B) ***Subdivision Common Area Landscape plan requirements.*** No Building Permit shall be issued for any Lot or improvement within a subdivision until a Landscape and Irrigation plan for all Common Areas is submitted to and approved by the City.

123.10 (C) ***Landscape plan amendment following a Disaster.*** If the City determines that any Trees are missing or have become substandard as a result of a Disaster, and the property Owner is unable to replace these Trees to meet the requirements of the Landscape plan approved by the City or Broward County, the property Owner shall amend the Landscape plan to include Trees that are provided on the City's Tree Replacement List. The City shall waive the Landscape plan amendment fee, if the property Owner replaces 100% of the missing or substandard Trees with Trees that are included on the City's Tree Replacement List.

§ 123.11 FINAL LANDSCAPE AND IRRIGATION INSTALLATION INSPECTIONS.

123.11 (A) ***Conditions.*** No final Certificate of Occupancy shall be issued unless one of the following conditions have been met:

123.11 (A)(1) the Landscape and Irrigation installation conforms to the approved Landscape and Irrigation plan.

123.11 (A)(1)(a) For multi-family residential or non-residential Development, the Landscape Architect who prepared the Landscape and Irrigation plan for the project shall be required to inspect the property after the installation of Landscaping and Irrigation to determine whether the Landscaping and Irrigation installed conforms to the approved plan.

123.11 (A)(1)(b) After the inspection, the Landscape Architect shall submit a written report of compliance to the City.

123.11 (A)(1)(c) Upon receiving this report, the City shall conduct a final inspection. If the inspection reveals that the approved Landscape and Irrigation plans have been satisfied, and the City has received a Landscape and Irrigation certification letter, hardcopy of Landscape and Irrigation plans, and as-built AutoCAD (.dwg) file, all signed and sealed by a Landscape Architect, then the final Certificate of Occupancy may be issued; or

123.11 (A)(2) A bond is posted pursuant to §123.12.

123.11 (B) ***Inspection of property.***

123.11 (B)(1) *Inspection***.** The City shall inspect Landscape on property located in a nonresidential zoning district, as well as on time share or multifamily rental properties, to ensure that the Landscape has been installed, maintained, and irrigated in accordance with the Landscape plan approved by Broward County or the City and the provisions of this Chapter and Chapter 122 of the Code. The property Owner/developer shall be responsible for payment of a Landscape inspection fee in an amount as set forth by resolution of the City Commission.

123.11 (B)(2) *Time limit for replacement of missing or substandard Landscape*. The property Owner is responsible for replacing any missing or substandard Landscape to ensure that the property complies with the Landscape plan within 60 days of the City's notice of non-compliance. Notwithstanding the foregoing, if the City determines that the missing or substandard Landscape was caused by a Disaster, the property Owner shall be responsible for the replacement of the missing or substandard Landscape in accordance with the following provisions:

123.11 (B)(2)(a) If the property is less than or equal to two acres, any missing or substandard Landscape shall be replaced within 90 days after the City's notice of non-compliance with an approved Landscape plan;

123.11 (B)(2)(b) If the property is greater than two acres, but less than or equal to ten acres, any missing or substandard Landscape shall be replaced within 120 days after the City's notice of non- compliance with an approved Landscape plan; or

123.11 (B)(2)(c) If the property is greater than ten acres, any missing or substandard Landscape shall be replaced within 150 days after the City's notice of non-compliance with an approved Landscape plan.

§ 123.12 CASH BOND FOR EXTENSION PERIOD.

123.12 (A) ***Cash bonds.*** Notwithstanding the failure to complete the Landscaping and Irrigation requirements of the Landscaping and Irrigation plans, a final Certificate of Occupancy may be issued to a property Owner upon the posting of a cash bond in the form of a certified or cashier's check made payable to the City in an amount equal to no less than 200% of the estimated cost of installing the Landscaping, as calculated by the registered Landscape Architect who prepared the Landscape plans and approved by the City. An administrative fee of $500, or 5% of the cash bond, whichever is greater, shall be included in addition to this estimated Landscape cost, and shall be nonrefundable. In no case shall the amount of the cash bond be less than $1,000. In addition, the property Owner shall execute and deliver to the City a "Landscape and Irrigation Construction easement and hold harmless/indemnification agreement" in a form acceptable to the City Manager and approved as to legality by the City Attorney, protecting the City in the event that it must exercise its rights under the bond.

123.12 (B) ***Time for performance***. The property Owner shall have 60 days from the issuance of the final Certificate of Occupancy to complete the Landscape and Irrigation installation in accordance with the approved Landscape and Irrigation plan.

123.12 (C) ***Release of cash bonds.*** Prior to the expiration of the 60-day time for performance period, the Landscape Architect who prepared the Landscape plan shall inspect the Landscaping to determine whether the requirements of this Chapter have been satisfied and submit a written report, with the inspection as described in §123.11(B) above. If the City's final inspection reveals that the Landscape and proposed Irrigation requirements of this Chapter have been satisfied, and the City has received a Landscape and Irrigation certification letter, hardcopy of Landscape and Irrigation plans and an as-built AutoCAD (.dwg) file, all signed and sealed by a Landscape Architect, the cash bond shall be returned to the Owner less the administrative fee.

123.12 (D) ***Forfeiture and use of cash bond.*** Upon the conclusion of the 60 day time for performance period, the entire cash bond shall be forfeited to and become the property of the City, unless the bond has been released pursuant to (C) above. If the bond is forfeited to the City, the City shall install or cause the installation of the required Landscaping and Irrigation in accordance with the Landscape and Irrigation plan required by this Chapter. In the event that the costs to install required Landscaping exceeds the cash bond amount, the City shall assess the property Owner for any additional costs. In the event that the costs to install required Landscaping is less than the cash bond amount, the City shall retain all additional funds.

§ 123.13 PLANTING REQUIREMENTS.

123.13 (A) ***Single-Family and Duplex residential Plant Units.*** A minimum of one Plant Unit shall be provided for each 50 square feet of pervious Lot area (in accordance with the Landscape Requirement Calculation Form for Single Family/Duplex Dwellings, as provided by the City. The Landscape Requirement Calculation Form for Single Family/Duplex Dwellings shall be submitted with permit plans. Of the total Plant Units required, 50% shall be Tree Plant Units (maximum 20% palms). The remainder Plant Units shall be Shrubs. Maximum turf grass areas shall be 70% for Single-Family residential (excluding the lake maintenance easement). For Lots 35,000 square feet or greater, a Landscape plan and the applicable fee shall be submitted to the City.

123.13 (B) ***Multi-family residential and non-residential Plant Units.*** On multi-family residential and non-residential sites, a minimum of one Plant Unit shall be provided for each 100 square feet of pervious Lot area in accordance with the Landscape Requirement Calculation Form for Multi-family and Non-residential sites, as provided by the City. The Landscape Requirement Calculation Form for Multi-family and Non-residential sites shall be submitted with site plans.

§ 123.14 PERIMETER BUFFERS, PARKING ISLANDS, AND VEHICULAR USE AREAS.

123.14 (A) ***Perimeter Buffers.*** The following Landscape buffer requirements shall be provided around the perimeter of the property related to all Development projects from adjacent Rights-Of-Way and properties. The Landscape Perimeter Buffer requirements shall not apply to Single-Family Lots. Such Perimeter Buffers may not be counted toward interior Landscape requirements.

123.14 (A)(1) *Buffer width***.**

123.14 (A)(1)(a) The portion of all Developments abutting Rights-Of-Way shall have a Perimeter Buffer width in accordance with the table below:

Right-Of-Way Width (feet)	***Minimum Perimeter Buffer Width (feet)***
80 or more	40
50 to 79	25
under 50	10

123.14 (A)(1)(b) All non-residential Developments abutting property zoned or used for residential purposes shall contain a minimum Perimeter Buffer width of 25 feet on each side abutting property zoned or used for residential purposes. All residential Developments abutting property zoned or used for non-residential purposes shall contain a minimum Perimeter Buffer width of 25 feet on each side abutting property zoned or used for non-residential purposes.

123.14 (A)(1)(c) All non-residential Developments abutting property that is not zoned or used for residential purposes shall contain a minimum Perimeter Buffer width of 10 feet on each side abutting property that is not zoned or used for residential purposes.

123.14 (A)(2) *Accessways***.** Perimeter Buffers may be traversed by necessary accessways, if approved by the City.

123.14 (A)(3) *Berms*. Berms shall be provided along all Perimeter Buffers except at approved ingress/egress openings. Required berms shall be not less than four feet in height measured from the crown of the Roadway or abutting residential pad finish floor elevation (FFE), whichever is higher; have a slope of not less than 3:1; and be fully sodded and irrigated. All contour lines with heights shall be depicted on all planting plans. Berms shall consist of a minimum of 50% sand and a maximum of 50% muck, with a pH between 6.5 and 7.0, and free of Construction Debris, weeds, and rocks.

123.14 (A)(4) *Plant Units***.** Perimeter Buffers shall include a minimum of one Plant Unit for every 25 square feet of buffer area. The remainder of the Perimeter Buffer shall be covered with grass, Ground Cover, or other Landscape treatment (no sand, gravel, pavers, or pavement). In addition, a Hedge, wall, or other durable Landscape barrier shall be placed along the inside perimeter of such buffer and maintained at a height of three feet along abutting Rights-Of-Way. In cases where non-Residential Property abuts Residential Property, the City can require such additional Landscaping as is necessary to protect the aesthetics and minimize the impact on the abutting Residential Area.

123.14 (B) ***Parking islands.*** The following Landscaping requirements shall apply to the interior of parking areas containing ten or more spaces.

123.14 (B)(1) *Planting areas and Plant Units*. Planting areas shall be located in islands and optional Medians.

123.14 (B)(2) *Terminal islands*. Landscaped terminal islands of at least 11 feet in width (including curbs) and 18 feet in length shall be provided at the end of each parking row. All islands of less than 11 feet due to turning radii requirements shall have polyethylene root barriers installed against the full perimeter of the island. All limerock shall be Excavated from islands to a depth of 2½ feet and backfilled with the specified planting mix.

123.14 (B)(3) *Interior islands*. At least one Landscaped interior island shall be provided for every ten parking spaces. Interior islands shall measure at least 11 feet in width (including curbs) and 18 feet in length. All limerock shall be Excavated from islands to a depth of 2½ feet and backfilled with the specified planting mix.

Fig. 1 Interior Islands

123.14 (B)(4) *Optional divider Medians*. When provided, divider Medians shall be a minimum of eleven feet in width, including Type D curbs.

123.14 (B)(5) *Landscape treatment*. All interior planting areas not dedicated to Trees, Shrubs, or existing vegetation shall be Landscaped with sod, Ground Cover, or other appropriate Landscape treatment (no sand, rock, pavement, or base soil). In no instance shall there be less than one Tree and 25 Shrubs for each Landscaped island.

123.14 (B)(6) *Site lighting and Trees*. No light Poles shall be located within 15 feet of a canopy Tree or within 71/2 feet of a palm species or small Tree. All final light Pole locations shall be illustrated on the planting plans.

123.14 (C) ***Vehicular Use Areas.*** The following standards shall apply to areas which serve vehicular movement, access, storage, display, queuing, or stacking. (Vehicular Use Areas include bank or Restaurant Drive-Through Facilities and unenclosed automobile, boat, or RV sales and storage areas.)

123.14 (C)(1) *Planting area*. At least 60 square feet of planting area with five Plant Units shall be provided for each parking space provided. All Trees shall be planted within 55 feet from a parking space, measured from the trunk.

123.14 (C)(2) *Landscape treatment*. All required planting areas not dedicated to Trees, Shrubs, or existing vegetation shall be Landscaped with grass, Ground Cover, or other appropriate treatment (no sand, rock, pavement, or soil).

§ 123.15 RIGHTS-OF-WAY AND ACCESSWAY INTERSECTIONS.

123.15 (A) ***Sight triangle.*** Sight triangles are required and shall include the area on each Right-Of-Way or accessway corner that is bounded by the line that connects the sight or "connecting" points located on each of the Right-Of-Way or property lines of intersecting Rights-Of-Way or accessways. Sight triangles shall be depicted on all planting plans.

123.15 (B) ***Sight triangle dimensions.***

123.15 (B)(1) Sight triangle requirements for the intersections of all Rights-Of-Way and accessways shall conform with the criteria outlined in the following standards:

123.15 (B)(1)(a) AASHTO's *A Policy on Geometric Design of Highways and Streets*.

123.15 (B)(1)(b) FDOT *Roadway and Traffic Design Standards,* Index No.'s 545, 546, and 700.

123.15 (B)(1)(c) FDOT *Manual of Uniform Minimum Standards for Design, Construction, and Maintenance for Streets and Highways*.

123.15 (B)(2) If an individual private driveway intersects with any Public Right-Of-Way, no sight distance obstruction will be permitted within the 10-foot by 50-foot triangular area formed by the intersection of each side of the driveway and the Ultimate Right-Of-Way or property lines with the driveway side of the triangle being 10 feet in length, the Public

Right-Of-Way side of the triangle being 50 feet in length, and the third side of the triangle being the line connecting the ends of the two other sides.

123.15 (B)(3) These requirements may be reduced to 10-foot by 35-foot, subject to City approval, if the public Right-Of-Way is a Local Street with a posted speed limit of 25 mph or less.

123.15 (B)(4) For all On-Site intersections of private internal accessways, driveways, and/or private drive aisles, a minimum 10-foot by 25-foot sight triangle must be maintained from the intersecting edges of the travel way, with the 10-foot side of the triangle being along the minor drive aisle and the 25-foot side of the triangle being along the major drive aisle.

123.15 (C) ***Clear visibility requirements.*** No Structure or planting (at mature growth) that exceeds 2½ feet in height above Street grade shall be permitted within required sight triangles. Exceptions are permitted if the lower canopies of Trees allow a clear line of sight between 2½ feet and 8 feet above adjacent Street grade and the trunks of such Trees are sufficiently spaced or located so as to be unlikely to interrupt the line of sight.

Fig. 4 Clear Visibility Requirements

§ 123.16 SWALE TREE REQUIREMENTS.

Applicants for a Development Permit shall submit a plan to provide for Swale Trees adjacent to their property.

123.16 (A) ***Swale Tree location and purpose***. Swale Trees shall be required along improved Rights-Of-Way. The species and location of Swale Trees shall not conflict with improvements and Utilities.

123.16 (B) ***Size, spacing and planting width***. Swale Trees shall, at time of planting, have a Clear Trunk of at least 4½ feet, a height of at least 14 feet, and a DBH of 2½ inches. Swale Trees shall be spaced at average intervals of 35 feet. Existing planting areas of less than six feet in width shall have a minimum depth of 12 inches. Roads fronting Single-Family Residences shall comply with these provisions. For all other Roadways, all Trees with existing or expected trunk diameters of four inches or greater must be located outside of the Roadway clear zone as established by applicable Roadway safety criteria. Average spacing requirements for grouped Single-Family units (zero-Lot-line or Townhouse) shall be based on total Frontage of the adjacent Street and not on individual Lot widths. Required Swale Trees shall be installed prior to the final Building inspection.

123.16 (C) ***Root barriers***. Root barriers are required where Swale Trees are planted within 5 feet of a Sidewalk or Roadway. Root barriers shall be placed against the edge of the Sidewalk and the edge of the pavement, and shall extend five feet in both directions parallel to the Sidewalk and Roadway.

§ 123.17 SCREENING REQUIREMENTS.

123.17 (A) ***Above-ground elements.*** Dumpsters, transformers, air conditioning units, mechanical equipment, and all other aboveground freestanding Utility equipment or enclosure elements shall be fully screened on all nonaccessible portions with Hedge material equal to the height of such elements.

123.17 (B) ***Generators.***

123.17 (B)(1) *New Development*. Generators and above ground gas tanks shall be fully screened on all nonaccessible portions with Hedge material equal to the height of the generator and the gas tanks.

123.17 (B)(2) *Existing Development*. Except when determined by the City that screening is impracticable, generators and above ground gas tanks installed on existing developed properties shall be fully screened on all nonaccessible portions with Hedge material equal to the height of the generator and the gas tanks.

123.17 (C) ***Foundation planting.*** Adjacent to proposed Buildings, Landscape material shall be installed at one-half the Height of the Building, covering a minimum of 30% of the Building Facade on all sides. A minimum 5 foot planting area shall be provided around all Buildings with the exception of service areas. All Landscape areas along Buildings shall be Excavated to a depth of 12 inches and backfilled with a composed of a minimum of 50% sand and a maximum of 50% muck soil mix.

§ 123.18 PLANT STANDARDS.

All Landscaping required by this Section shall comply with the following:

123.18 (A) ***Plant Unit equivalencies.*** Many of the requirements of this Section are expressed in terms of "Plant Units." In all cases, a minimum of 50% of all required Plant Units shall come from Trees. The following provides a breakdown of Plant Unit equivalencies:

PLANT UNIT EQUIVALENCY TABLE	
Plant Type	***Plant Units***
Large Tree	10
Specimen palm Tree species (royal palms, Bismarckia, Canary Island date palms and medjool palm with ten feet of grey wood with 20 inch DBH)	10
Small Tree	5
Large palm species (royal palms, Bismarckia, Canary Island date, medjool and Sylvester with 7 feet of grey wood with 15 inch DBH)	5

PLANT UNIT EQUIVALENCY TABLE	
Plant Type	***Plant Units***
Other palm species	2.5
Shrub	1

Fig. 5 Plant Unit Equivalences

123.18 (B) ***Plant Unit sizes.*** Minimum size of required Trees and Shrubs (at time of planting) shall be:

Type	***DBH***	***Height/Spread***
Large Tree	2½ in.	14 ft., 5 to 6 ft. spread, with 4½ ft. Clear Trunk
Small Tree	1.75 in.	10 ft., 5 ft. spread, 4 ft. Clear Trunk
Specimen palm species	20 in.	10 ft. wood
Large palm species	15 in.	7 ft. wood
Other palm species	N/A	12 ft. to 14 ft. overall height
Shrubs	N/A	2 ft. overall height, 18 in. spread, 18 in. on center

123.18 (C) ***Plant Location.***

123.18 (C)*(1) Trees and Palms*.

123.18 (C)(1)(a) All proposed Trees and palms shall not be planted under Roof, overhangs, and balconies.

123.18 (C)(1)(b) All proposed Trees and palms within or overhanging pedestrian areas shall have a Clear Trunk high enough to allow unobstructed pedestrian movement under or around.

123.18 (C)(1)(c) All proposed tot lots or swimming pools, except for a Single-Family home, shall be required to have a minimum shade requirement to allow Persons to seek refuge from the sun.

123.18 (C)(1)(d) The use of very poisonous, thorny, spiny, deciduous, messy fruit or an aggressive root system Tree or palm shall be reviewed case by case.

123.18 (C)(1)(e) All Trees and palms shall be a minimum of 4 feet from all underground Utility lines.

123.18 (C)(1)(f) All shade Trees shall be installed a minimum of 15 feet away from light Poles. All small Trees and palms shall be installed a minimum of 7.5 feet away from light Poles.

123.18 (C)(1)(g) All Trees and palms shall be installed 7.5 feet from the front and sides of fire hydrants and 4 feet from the rear.

123.18 (C)(2*) Shrubs*.

123.18 (C)(2)(a) Shrubs shall be planted in a manner that prevents branches from touching the Building walls or walkways at time of planting.

123.18 (C)(2)(b) Shrubs shall be installed 7.5 feet from the front and sides of fire hydrants and 4 feet from the rear.

123.18 (C)(2)(c) Planting Shrubs around Trees shall be done in a manner that prevents trunk damage.

123.18 (C)(2)(d) Planting Shrubs in layers shall be done in a manner that promotes plant species diversity and the City's aesthetics with taller Shrubs in the back and shorter Shrubs in the front.

123.18 (C)(3) *Ficus species*. Ficus species shall not be permitted within ten feet of any Structure, Utility, or Street. Such species may be permitted only if they are:

123.18 (C)(3)(a) Located on a berm of at least four feet in height within a minimum 25-foot Perimeter Buffer.

123.18 (C)(3)(b) Maintained as a Hedge that is neat and orderly in appearance.

123.18 (D) ***Plant Standards.***

123.18 (D)(1) *Trees and Palms*.

123.18 (D)(1)(a) All proposed multi-trunk Trees shall have a minimum of three trunks with no more than five trunks of equal diameters originating from the base of the Tree with angles no greater than 45 degrees. (The City can require either multi-trunk or single trunk on certain Trees.)

123.18 (D)(1)(b) All proposed coconut palms shall be certified to be resistant to lethal yellowing.

123.18 (D)(1)(c) The use of wind tolerant Trees and palms are required due to the high risk of hurricanes in South Florida. Every effort shall be utilized to reduce the risk of damage and liability by utilizing more wind tolerant Landscaping.

123.18 (D)(2) *Shrubs.*

123.18 (D)(2)(a) Shrubs shall be multi-stem with a minimum of three stems originating from the base of the Shrub.

123.18 (D)(2)(b) The use of plant material that can be hazardous to Persons, pets or property shall be reviewed on a case by case basis.

123.18 (D)(3) *Vines.*

Vines used for vertical screening shall be a minimum 60 inches in supported height immediately after planting. The method of Attachment shall be indicated on the Landscape plans. The use of very poisonous, thorny, spiny, deciduous, or messy fruit Vines shall be subject to the approval of the City. Support Structures, including such as but not limited to, pergolas, trellises and arbors, require Vines.

123.18 (E) ***Plant species.***

123.18 (E)(1) ***Native and drought-tolerant species.***

123.18 (E)(1)(a) *Use of site specific material:* Plants used in the Landscape design shall be appropriate to the environmental conditions.

123.18 (E)(1)(b) Drought tolerant Landscape species and grouping of plant material by water requirements are required.

123.18 (E)(1)(c) Minimum requirements for required plant species shall be as follows:

Type	***Minimum Required Percentage*** **
Native species*	50
Drought tolerant*	50
* As defined in the South Florida Water Management District's *Xeriscape Plant Guide III*. ** Percentages are not cumulative and may be overlapping.	

123.18 (E)(2) *Tree species diversity*. The Tree species diversity shall be as follows:

Number of Trees	***Minimum Number of Species****
1-4	1
5-10	2
11-25	4
26-50	5
51+	6
* Not more than 20% of the Tree requirement shall be palm species.	

123.18 (F) ***Plant quality.*** Plant materials used in accordance with this Code shall conform to the standards for Florida Grade 1 or Florida Fancy as provided for in the latest edition of *Grades and Standards for Nursery Plants*, State of Florida Department of Agricultural and Consumer Services. For standards not addressed in the Florida *Grades and Standards for Nursery Plants,* plant materials shall conform to the American National Standards Institute ANSI Standards Z60.1.

123.18 (G) ***Existing vegetation.*** At the discretion of the City, vegetation and plant material that exists on a site prior to its Development may be used to satisfy the requirements of this Section, provided that such vegetation meets the Landscape standards in this Section. However, no credit shall be permitted for:

123.18 (G)(1) Vegetation not properly protected from damage during Construction.

123.18 (G)(2) Plant species classified as "prohibited" or "controlled."

123.18 (G)(3) Vegetation that is dead, dying, diseased, or infested with insects.

123.18 (G)(4) Existing plant material noted as prohibited shall be removed from the site.

123.18 (H) ***Replacement of Landscape material.*** All vegetation, including credited Landscaping per an approved plan, that subsequently die shall be replaced by the requisite number of Landscaping according to the standards established in this Chapter.

123.18 (I) ***Ground treatment.*** Pervious Areas within required planting areas not dedicated to Trees, Shrubs, or other vegetation shall receive appropriate Landscape treatment and present a finished appearance and complete coverage upon planting. No sand, gravel, pavement, or base soil shall be permitted. The following standards shall apply:

123.18 (I)(1) *Topsoil/planting soil*. Topsoil and/or planting soil shall have a pH between 6.5 and 7.0; be composed of a minimum of 50% sand and a maximum of 50% muck; and be free of Debris, weeds, and rocks.

123.18 (I)(2) *Ground Cover*. Ground Cover may be planted in lieu of sod. Ground Cover shall provide not less that 75% coverage upon planting and 100% coverage within three months after planting. All Ground Cover shall be planted so not to touch the Building walls or walkways at time of planting. Planting Ground Cover around Trees shall be done in a manner that prevents trunk damage.

123.18 (I)(3) *Mulch*. 3 inches of shredded, organic, arsenic free Mulch shall be installed around each Tree planting for a minimum of 18 inches beyond its trunk in all directions, including palms, and throughout all Hedge, Shrub, and Ground Cover planting; Mulch shall be pulled a minimum of 2 inches away from Trees and palms.

123.18 (I)(4) *Decorative rock Mulch*. In lieu of installing Mulch, decorative rock Mulch, ranging in size of 2″ to 4″, may be installed provided that only the following rock types are utilized: egg rock, jade rock, river jack rock, Mexican pebble, red quartzite, red lava rock, butter rock, and river rock.

123.18 (I)(4)(a) *Residential*. Decorative rock Mulch may be incorporated into designed Landscape beds up to a maximum 5% of the site Pervious Area excluding lake maintenance easements and Swales. These Landscape beds shall be contained by Landscape edging and shall not be located in the Swale areas or lake maintenance easements.

123.18 (I)(4)(b) *Commercial and Multi-Family*. Decorative rock Mulch may be designed into foundation Landscape area beds around Buildings, pools, fountains and Monument Signs if contained by a poured concrete boundary.

123.18 (I)(5) *Sod*. All sod areas, including but not limited to, Swales, lake maintenance easements, and Retention Areas, shall be solid St. Augustine Floratam, Palmetto or Bermuda laid on a smooth planting base with tight joints at 100% coverage at time of planting and cut to fit all Landscape planters and curb areas. Sod shall be green, healthy, clean, and visibly free of weeds, pests, and diseases. Sod areas shall be identified and labeled on the Landscape plans. Seeding and plugs are prohibited. No more than the following percentages of planting areas may be in sod:

Land Use Type	***Maximum Percent of Landscape Area in Sod****
Single-Family residential	70
Multi-family residential	60
Non-residential	50
* Maximum percent of planting area in grass exclusive of lake maintenance area.	

123.18 (J) ***Prohibited plant species.*** The following plant species shall not be used:

Botanical Name	***Common Name***
(1) *Acacia auriculaeformis*	earleaf acacia
(2) *Araucaria heterophylla*	Norfolk Island pine
(3) *Ardisia solanecea*	shoebutton ardisia
(4) *Bischofia javanica*	toog
(5) *Brassaria actinophylla*	schefflera
(6) *Casuarina trees*	Australian pine
(7) *Cupaniopsis anacardiodes*	carrotwood
(8) *Dalbergia sisoo*	rosewood
(9) *Grevillea robusta*	silk oak
(10) *Hibiscus tiliaceus*	mahoe
(11) *Lucaena leucocephala*	lead Tree or jumbie bean
(12) *Melaleuca quinquenervia*	punk Tree or paper bark
(13) *Metopium toxiferum*	poisonwood
(14) *Rhodomyrtus tomentosa*	downy rose myrtle
(15) *Schinus terebinthifolius*	Brazilian pepper or Florida holly
(16) *Bucida buceras*	black olive
(17) *Callistemon viminalis*	weeping bottlebrush

§123.19 INSTALLATION STANDARDS.

All Landscaping shall be installed according to sound nursery practices in a manner designed to encourage vigorous growth. All required Landscape material shall be healthy and in place prior to, and at the time of, issuance of the final Certificate of Occupancy.

123.19 (A) All Trees, palms, Shrubs, and Ground Covers shall be planted with a minimum of 12 inches or 2 times the size of the rootball of planting soil around rootball.

123.19 (B) A minimum of 3 inches of shredded, approved arsenic free, organic Mulch, or Ground Cover shall be installed around each Tree planting for a minimum of 18 inches beyond its trunk in all direction, including palms, and throughout all Hedge, Shrub, and

Ground Cover planting. The use of Mulch obtained from Melaleuca, Eucalyptus, or other invasive plant species is encouraged in order to reduce their impact on the Environment and to preserve the remaining native plant community.

123.19 (C) All Trees/palms shall be properly guyed and staked at time of planting until one Year from Landscape final or establishment. All guying and staking shall be removed within one Year of approval or establishment. The use of nails, wire, rope, or any other method which damages the Trees or palms is prohibited.

123.19 (D) All plants shall be installed so the top of the rootball is 10% above the surrounding soil grade. All synthetic string, synthetic burlap, cords, or wire baskets shall be removed prior to planting.

123.19 (E) All parking islands, Medians, and other Landscape areas shall be installed with continuous Type "D" curbing to prevent damage to the planting material and the displacement of soil and Mulch. Also, all Landscape islands, divider Medians, and planters shall be Excavated of limerock and/or compacted soil to a depth of 30 inches and backfilled with specified planting mix to the top of curb. Additionally, all areas along Buildings shall be Excavated to a depth of 12 inches and backfilled with specified planting mix.

123.19 (F) All parking Structures require irrigated planters with plant material that screens and buffer the parking Structures on all sides.

123.19 (G) All Landscaping shall be installed with slow release fertilizer that is made of trace minor elements in addition to minimum 8% Nitrogen, 2% Phosphorus, and 12% Potassium per manufacturer's recommendations. 50% of the Nitrogen must be derived from an organic source.

123.19 (H) All plant rootball sizes shall conform or exceed the minimum standards in the current edition of Florida Grades and Standards.

123.19 (I) All Landscaping, including Trees, palms, Shrubs, Vines, and Ground Covers shall be guaranteed for one Year after final Landscape approval. A written warranty shall be submitted to the City prior to final Landscape approval.

123.19 (I)(1) All invasive, exotic pest plants shall be removed prior to final inspection.

123.19 (I)(2) All Landscape substitutions shall require City approval prior to installation.

123.19 (I)(3) Inspections.

123.19 (I)(3)(a) A pre-inspection of the site with the Landscape contractor shall be required to discuss all the City's requirements, answer any questions and determine and site conditions for appropriate use and selection of Landscape material prior to installation.

123.19 (I)(3)(b) A final Landscape inspection shall be required upon completion.

§123.20 IRRIGATION STANDARDS.

Landscaped areas shall be irrigated to maintain required plant materials in good and healthy condition. Irrigation systems shall be installed underground and comply with the following:

123.20 (A) All required planting areas shall be served by a permanent Irrigation system maintained in good working order and designed to minimize water on Impervious Areas. Drip Irrigation systems, where practical, shall be encouraged.

123.20 (B) Irrigation systems shall be designed to apply water onto Shrub and Tree areas less frequently than those onto Lawn areas. Irrigation systems shall be designed to have 100% coverage with 100% overlap.

123.20 (C) Rain-sensors shall be installed on systems with automatic controllers.

123.20 (D) All Irrigation systems utilizing non-Potable Water shall include a treatment system to prevent rust stains.

CHAPTER 124. ZONING.

GENERAL PROVISIONS

§ 124.01 SCOPE OF REGULATIONS.

No Building or Structure or part thereof shall be erected, constructed, reconstructed or altered and maintained, and no existing Use, new Use, or change of Use of any Building, Structure or land of part thereof shall be made or continued, and no occupancy permit shall be issued, except in conformity with the provisions of these zoning regulations. This Section shall not apply to complete applications submitted prior to the effective date of this ordinance.

§ 124.02 REPOSITORY OF THE OFFICIAL ZONING MAP.

The official zoning map shall be on file and available to the public in the City Clerk's office.

§ 124.03 APPLICABILITY TO CITY USES.

The provisions of this Chapter and the Land Development Chapter shall not apply to the Use of any property by the City and its dependent districts in any government capacity, function, or purpose.

ZONING DISTRICTS

§ 124.10 LISTING OF ZONING DISTRICTS.

(A) The City is divided into zoning districts of such number, shape and area as may be deemed best suited to carry out the purpose of these zoning regulations. Such districts shall be represented on the official zoning map adopted by the City Commission. The table below explains the symbols used for each designation.

Single Family Districts (§ 124.14)		Specialized Use Districts	
R1	Single Family Residential Medium	AE	Agricultural Estate (§124.23)
R2	Single Family Residential Moderate	CF	Community Facility (§124.18)
R3	Single Family Residential Moderate/Low	CV	Conservation (§124.24)
R4	Single Family Residential Low		
RE	Estate Residential	GC	Golf Course (§124.19)
RZ	Single Family Residential zero Lot line	MU	Municipal Use (§124.20)
		PECD	Planned Employment Center District (§124.22)
		PDD	Planned Development District (§124.21)
Multiple Family Districts (§124.15)		*Office District*	
MF1	Villa and Townhouse	O-1	Office (§124.16(B))
MF2	Low Rise Multi Family (2 or 3 stories)		
MF3	High Rise Multi Family (4 or more stories)		
		Commercial Districts	
		C-1	Commercial (§124.16(C))
		Industrial District	
		I-1	Industrial (§124.16(A))

§ 124.11 MAXIMUM PERMITTED UNITS.

124.11 (A) The maximum number of units permitted on a site shall be equal to the maximum permitted density per acre as set forth in the comprehensive plan multiplied by the gross number of acres of the site. For Hotel and Motel units in residential zoning districts, every two sleeping rooms shall count as one Dwelling Unit.

124.11 (B) Density from one site shall not be transferred to another site.

§124.12 INTERPRETATION OF DISTRICT BOUNDARIES.

124.12 (A) In cases where a boundary line is given a position within a Street or alley, easement, canal, waterway, it shall be deemed to be in the center of the Right-Of-Way of the Street, alley, easement, canal or waterways.

124.12 (B) If a site is crossed by a zoning district boundary and thus lies in more than one district, the district boundary shall be treated as if it were a Lot line separating the two separately zoned parcels.

124.12 (C) The boundary line for properties having a Lot line adjacent to a waterway, lake or canal is the bulkhead. If a bulkhead does not exist, the property line shall be as shown on a survey that is signed and sealed by a professional surveyor and mapper in the state of Florida.

§ 124.13 PROHIBITED USES.

124.13 (A) Unless a use is specifically listed as a permitted Use, or is found to be permitted pursuant to § 124.65, it shall be prohibited.

124.13 (B) Any use that produces unmitigated hazardous effects, including but not limited to, fumes, odors, noise, dust, smoke, or glare, to the extent that it disturbs the quiet enjoyment of adjoining property.

RESIDENTIAL

§ 124.14 SINGLE FAMILY RESIDENTIAL DISTRICTS (SF).

District purpose: These districts are designed to permit the Development and maintenance of detached Single-Family residential homes and to promote and encourage a quiet and safe environment.

Permitted Uses: Residential Structures containing a Single Family Dwelling Unit.

Setback/Development standards: See § 124.47.

§ 124.15 MULTIPLE FAMILY DISTRICTS (MF).

District purpose: These districts are intended to permit the Development and maintenance of Buildings with multiple Dwelling Units and to promote and encourage a quiet and safe environment.

Permitted Uses: Residential Structures containing two or more Dwelling Units.

Special exception Uses: Timeshare units.

Setback/Development standards: See § 124.47.

INDUSTRIAL, OFFICE, COMMERCIAL (IOC)

§124.16 IOC DISTRICTS.

126.16 (A) ***Industrial district* (I-1)**.

District purpose: This district is intended to permit professional and real estate office Uses as well as the interior storage, manufacture and distribution of products that can be accomplished without the production of noise or vibration, smoke or noxious odors beyond the interior of the Structure(s).

Permitted Uses: See § 124.16(D).

Setback/Development standards: See § 124.47.

124.16 (B) ***Office district* (O-1).**

District purpose: This. District is intended to permit professional, medical and real estate office Uses.

Permitted Uses: See § 124.16(D).

Setback/Development standards: See § 124.47.

124.16 (C) ***Commercial district* (C-1).**

District purpose: This district permits the Development of land in a commercial manner with Uses that provide for the sale of goods and products that are needed throughout the entire City.

Permitted Uses: See § 124.16(D).

Setback/Development standards: See § 124.47.

124.16 (D) ***Permitted Uses*.**

(P indicates that the Use is permitted in the zoning category, SE indicates that the Use requires special exception approval in the zoning category, NP indicates that the use is prohibited in the zoning category.)

USES	I-1	O-1	C-1
Adult education facility	SE	SE	SE
Adult Entertainment Establishment*	P*	NP	NP
Amusement Center/arcade	NP	NP	SE

USES	I-1	O-1	C-1
Animal boarding	SE	NP	SE
Animal hospital	SE	NP	SE
Appliance repair	P	NP	P
Appliance sales	NP	NP	P
Appliance/furniture rental agencies	P	NP	P
Assembly (industrial)	P	NP	NP
Auditorium/assembly hall	P	NP	P
Bakery	NP	NP	P
Banks	NP	P	P
Banquet facility	SE	NP	SE
Bar/night club	NP	NP	SE
Barber/beauty salon	NP	NP	P
Book store	NP	NP	P
Bowling center	NP	NP	SE
Bulk film processing lab	SE	NP	NP
Call center/telemarketing	P	P	NP
Catering facility	SE	NP	SE
Cemeteries and crematoriums	SE	NP	NP
Chemical bulk storage	SE	NP	NP
Commercial gymnasium, athletic facility	P	P	P
Commercial pool	NP	NP	SE
Convenience Store	NP	P	P
Courier services	P	P	P
Dance hall	SE	NP	SE
Day care	NP	SE	SE
Dinner theatre	SE	NP	SE
Drive-through facilities/ freestanding	NP	P	P
Dry cleaner (on premise)	P	NP	SE
Construction Equipment renting	SE	NP	SE
Essential services & Utilities	P	P	P

USES	I-1	O-1	C-1
Florist	NP	NP	P
Food processing establishment	P	NP	NP
Food take-out or delivery	NP	NP	P
Fuel Station	NP	NP	SE
Funeral home/mortuary	SE	NP	NP
Furniture sales	NP	NP	P
Game room/billiards	NP	NP	SE
Golf course	P	NP	P
Grocery store	NP	NP	P
Gun/knife store	NP	NP	NP
Hair stylist	NP	NP	P
Hardware store	NP	NP	P
Hobby supply	NP	NP	P
Hospital	P	P	P
Hotel/Motel, Timeshare	P	P	P
House of worship	P	P	P
Jewelry sales	NP	NP	P
Library	P	P	P
Light manufacturing	P	NP	NP
Limousine/taxi service	SE	NP	NP
Martial arts academy	P	NP	P
Massage/tanning salon	NP	NP	SE
Medical Office	NP	P	P
Medical/dental laboratories, public	P	P	P
Medical/dental laboratories, research or testing	SE	SE	NP
Medical/dental office	NP	P	P
Nail salon	NP	NP	P
Night club	NP	NP	SE

USES	I-1	O-1	C-1
Nursing Home/Residential Care Facility	NP	SE	NP
Community Center	P	P	P
Outdoor storage	SE	SE	SE
Pet supply	NP	NP	P
Pharmacy	NP	NP	P
Photocopy or printshop	P	NP	P
Post office	P	P	P
Private club or lodge	P	NP	P
Professional office	P	P	P
Real estate office	P	P	P
Repair shop (household & personal)	P	NP	P
Research and testing facility (not medical or dental)	P	NP	NP
Restaurant	NP	P	P
Retail sales	NP	NP	P
School, Dance	P	P	P
School, Gymnastic	P	NP	P
School, Private & Public	SE	P	P
School, Trade	SE	NP	SE
Self service carwash	SE	NP	SE
Self storage Warehouse	SE	NP	SE
Skating rink	SE	NP	SE
Small equipment rental agencies	SE	NP	SE
Theater, movie	SE	NP	SE
Tobacco store	NP	NP	SE
Utilities	P	NP	NP
Vehicle cleaning	SE	NP	SE
Vehicle parts and accessory installation	SE	NP	SE
Vehicle rental agency	SE	NP	SE

USES	I-1	O-1	C-1
Vehicle service and repair	SE	NP	SE
Warehouse and distribution	P	NP	NP
Wireless telecommunications facility	P	P	P

*Subject to spacing requirements set forth in the Adult Business Chapter

§ 124.17 FOOD SERVICE AND ALCOHOLIC BEVERAGE ESTABLISHMENTS - COUNTER SEATING.

When a food service establishment or Bar offers seating for its patrons at a bar or counter, there shall be no more than one seat per 24 lineal inches of bar/counter, excluding any service area.

§ 124.18 COMMUNITY FACILITIES (CF) DISTRICT.

124.18 (A) ***Purpose of district.*** The CF Community Facilities District is intended to accommodate governmental, cultural, community, and health needs of a particular neighborhood or region.

124.18 (B) ***Uses permitted.*** No Building or Structure, or part thereof, shall be erected, altered, or used in whole or in part for other than one of the following Uses:

124.18 (B)(1) Museums, libraries, auditoriums, and civic centers.

124.18 (B)(2) Non-municipal police and fire protection facilities.

124.18 (B)(3) Non-municipal Governmental facilities.

124.18 (B)(4) Public works and related facilities.

124.18 (B)(5) Judicial Courts and related facilities.

124.18 (B)(6) Non-municipal recreational facilities.

124.18 (B)(7) Hospitals, convalescent homes and nursing homes.

124.18 (B)(8) Places of public assembly.

124.18 (B)(9) Non-municipal Utilities.

124.18 (B)(10) Public and Private Schools.

124.18 (B)(11) Child Care Facilities.

124.18 (C) ***Size of plot***. Every plot upon which a permitted Structure or Use, other than an Accessory Structure or Use, is erected or placed shall not be less than 43,560 square feet of area and have at least 150 feet of Street Frontage.

124.18 (D) ***Height***. No Building, Structure, or Use shall be erected, placed, or altered to exceed the maximum Height permitted within the zoning district on adjacent property. The most restrictive Height shall apply if the existing Height limits on adjacent properties vary.

124.18 (E) ***Yards***. Every plot shall have a front yard of not less than 25 feet in depth. Every plot shall have a side and rear yard of not less than 25 feet.

§ 124.19 GOLF COURSE DISTRICT (GC).

124.19 (A) ***Purpose of district.*** The purpose of the GC Golf Course District is to designate areas for golf courses and directly related Uses to preserve areas of open space by limiting the intensity of Development.

124.19 (B) ***Site Development Plan.*** The site Development Plan for a plot in a GC District shall provide, for such an arrangement and location of Uses and facilities on the plot as to give maximum possible separation from, and protection to, contiguous and nearby property. Where the nature of the activities or facilities on the plot present any potential hazard or detriment to contiguous properties from noise, glare, odors, smoke, vibration, flying objects, or Traffic, protection to such contiguous properties shall be provided in the form of open space, fences, walls, Landscaping enclosures, and/or by such other means as may be appropriate and effective to prevent or minimize such hazards.

124.19 (C) ***Uses permitted.*** No Building or Structure, or part thereof, shall be erected, altered, or used in whole or in part for other than one of the following Uses:

124.19 (C)(1) Golf courses.

124.19 (C)(2) Golf clubhouse.

124.19 (C)(3) The following Uses, if determined by the City Commission to be directly associated with the primary golf course Use:

124.19 (C)(3)(a) Tennis courts.

124.19 (C)(3)(b) Swimming pools.

124.19 (C)(3)(c) Unlit driving ranges.

124.19 (C)(3)(d) Restaurants or lounges.

124.19 (C)(3)(e) Pro shops.

124.19 (C)(3)(f) Accessory Buildings, including but not limited to; snack shops, maintenance facilities, storage facilities, and restrooms.

124.19 (D) ***Height.*** No Building, Structure, or Use shall be erected, placed, or altered to a Height exceeding 42 feet.

124.19 (E) ***Area.*** All golf courses and related permitted Uses must have a minimum area of 50 acres.

124.19 (F) ***Setbacks.***

124.19 (F)(1) All permitted Structures shall have the following Setbacks:

124.19 (F)(1)(a) Minimum Front Setback: 100 feet.

124.19 (F)(1)(b) Minimum Side Setback: 100 feet.

124.19 (F)(1)(c) Minimum Rear Setback: 100 feet.

124.19 (F)(2) No parking area shall be located within 50 feet of any residentially zoned property.

124.19 (G) ***Plot coverage.*** The combined area occupied by all main and Accessory Buildings and Structures shall not exceed 10% of the total area.

124.19 (H) ***Fences and walls.*** No fences or walls shall be located in the GC District without City Commission approval.

124.19 (I) ***Landscaping.*** All required yards and open spaces adjacent to Streets and contiguous to residential property shall be planted and maintained with suitable material in the form of grass, Shrubs, Hedges, and Trees to present an attractive appearance.

124.19 (J) ***Poles, netting, lighting, and other buffers.*** Poles, netting, lighting, and other buffers surrounding an unlit driving range shall be permitted only as a special exception.

§ 124.20 MUNICIPAL USE (MU)

Property designated as Municipal Use are limited to those properties that are owned by the City, and may be used as deemed appropriate by the City.

§ 124.21 PLANNED DEVELOPMENT DISTRICT (PDD).

124.21 (A) ***Purpose of district.***

124.21 (A)(1) The Planned Development District is intended to encourage the implementation of innovative land planning and site designs that create enhanced living and working environments by providing flexible land Use and design regulations. A PDD would allow small- to large-scale areas to be developed with a variety of residential types

and non-residential Uses that may contain both individual Building sites and common property, which are planned and developed as a unified district.

124.21 (A)(2) The Planned Development District to be designed and organized so as to be capable of satisfactory Use and operation as a separate entity without necessarily needing the participation of other Building sites or other common property in order to function as a neighborhood. This Section specifically encourages innovations so that the growing demands of residential and non-residential Uses may be met by a greater variety in type, design, and siting of Buildings and by the conservation and more efficient Use of land. This Section shall also be utilized to protect, preserve, and enhance lands designated "Agriculture" by the certified Future Land Use Element of the City Comprehensive Plan through the adoption and enforcement of creative land development regulations.

124.21 (A)(3) This Section recognizes that standard zoning and subdivision functions are appropriate for the regulation of land Use in areas of neighborhoods that are already substantially developed. Therefore, where Planned Development District concepts are appropriate, the land may be rezoned to a PDD District. In doing so, conventional Use and dimensional specifications are replaced by an approval process in which an approved plan becomes the basis for continuing land Use controls. This provides the mechanism by which the City Commission may approve land Development Plans which meet or exceed the level of Development quality required by adopted City zoning standards.

124.21 (A)(4) It is intended that this district offer Development design flexibility to developers in order to encourage imaginative, functional, high quality Development Planning. The Use of this district shall be limited to those Development projects which will result in desirable community Environmental qualities and Development which is compatible with the surrounding lands and activities and consistent with the permitted Uses of the Comprehensive Plan.

124.21 (B) ***Design guidelines.***

124.21 (B)(1) Petitioner shall submit a Master Development Plan as part of the rezoning request. The site Development Plan shall contain design guidelines that shall include, but not be limited to, the following:

124.21 (B)(1)(a) Signage.

124.21 (B)(1)(b) Housing type.

124.21 (B)(1)(c) Minimum Lot size.

124.21 (B)(1)(d) Minimum Lot Frontage.

124.21 (B)(1)(e) Minimum square footage and, Building type for residential and non-residential Structures.

124.21 (B)(1)(f) Maximum Height.

124.21 (B)(1)(g) Front, Side, Rear Street, side yard Setbacks.

124.21 (B)(1)(h) Setbacks to Accessory Uses (pools, patios, etc.).

124.21 (B)(1)(i) Typical Landscape for a detached residential unit.

124.21 (B)(1)(j) Street Landscape.

124.21 (B)(1)(k) Common Area Landscape.

124.21 (B)(1)(l) Buffer Landscape.

124.21 (B)(1)(m) Lighting.

124.21 (B)(1)(n) Drainage.

124.21 (B)(1)(o) Internal circulation.

124.21 (B)(1)(p) Signage.

124.21 (B)(2) Such design guidelines shall become a part of the PDD rezoning ordinance.

124.21 (C) ***Common open space.***

124.21 (C)(1) All common open space shall be preserved for its intended purpose as expressed in the Master Development Plan. The developer shall choose one or a combination of the following three methods of administering common open space, subject to approval by the City, and the method chosen by the developer shall be stated in the Master Development Plan:

124.21 (C)(1)(a) Dedication to the City of the common open space. This method is subject to formal acceptance by the City in its sole discretion.

124.21 (C)(1)(b) Conveyance to one or more associations, nonprofit corporations, or other appropriate entities provided all Persons owning property within the Planned Development are members of one or more of the associations, nonprofit corporations or other entities so that the common open space will be used as specified on the Master Development Plan and all common open space will be properly maintained.

124.21 (C)(1)(c) Retention of ownership, control, and maintenance of all common open space by the developer.

124.21 (C)(2) If the developer elects to administer common open space through one or more associations, not-for-profit corporations, or other entities, said organizations shall conform to the following requirements:

124.21 (C)(2)(a) They shall be created prior to the sale of any property within a phase of the PDD.

124.21 (C)(2)(b) Membership shall be mandatory for all property owners within the Planned Development or any phase thereof, and the organizations shall not discriminate as to race, color, religion, national origin, sex, age, marital status, political affiliation, their membership or shareholders.

124.21 (C)(2)(c) They shall:

124.21 (C)(2)(c)(1) Manage all common open space and Recreational and cultural Facilities that are not dedicated to the public.

124.21 (C)(2)(c)(2) Provide for the maintenance, administration, and operation of said land and any other land within the planned Development not publicly or privately owned.

124.21 (C)(2)(c)(3) All privately owned common open space shall conform to the intended Use of and remain as expressed in the Master Development Plan through the inclusion of appropriate covenants in all conveyances of land within the PDD. These covenants shall run with the land and be for the benefit of present and future property owners.

124.21 (C)(2)(c)(4) All common open space and public Recreational and cultural Facilities shall be specifically included in a Development Plan schedule that shall set forth the proposed improvements including but not limited to Landscaping, hardscape features, recreational components both passive and active and lighting, and be completed by the developer in accordance with such schedule.

124.21 (D) ***Land Use regulations.***

124.21 (D)(1) ***Minimum size.*** All planned Developments shall contain a minimum of 5 acres

124.21 (D)(2) ***Minimum Lot area, distance between Structures, Frontage, Setbacks, and Height regulations.***

124.21 (D)(2)(a) No minimum Lot size shall be required within a Planned Development except as specified by the Master Development Plan, however, in no case shall the minimum Lot size be less than the smallest Lot permitted in any zoning category or in any other restrictive criteria for that particular Use.

124.21 (D)(2)(b) No minimum distance between Structures shall be required within a Planned Development District, except as specified by the Master Development Plan or by the Building Code adopted by the City.

124.21 (D)(2)(c) Each Dwelling Unit or other permitted Use shall have access to the public Street either directly or indirectly via an approach, private road, pedestrian way,

court, or other area dedicated to public or private Use or common easement guaranteeing access. The City shall be allowed access on privately owned roads, easements, and common open space to ensure the police and fire protection of the area, to meet Emergency needs, to conduct municipal services, and to generally ensure the health and safety of the residents of the Planned Development.

124.21 (D)(2)(d) There shall be no specified Setbacks or yards except as approved by the Master Development Plan, together with the following:

124.21 (D)(2)(d)(1.) There shall be a Setback or yard not less than 25 feet in depth abutting all Public or Private road Rights-Of-Way.

124.21 (D)(2)(d)(2.) All lots of a Planned Development are to be controlled by the Master Development Plan in accordance with the provisions of the City's land development Chapter. The provisions governing changes in the Master Development Plan will apply to the amendment of Lot lines depicted on the Master Development Plan.

124.21 (D)(2)(e) No maximum Height limitations shall apply in a PDD except as specified in the Master Development Plan.

124.21 (D)(3) ***Landscaping.*** Landscaping shall meet all the requirements of the City Code, provided that additional Landscaped areas may be required for site plans that are adjacent to LAPC's, NRA's, parks, or residential zoning districts.

124.21 (D)(4) ***Signs.*** Signs within a PDD shall comply with the City Code according to the types and density and intensity of Uses permitted by the Master Development Plan.

124.21 (D)(5) ***Density and intensity of land Uses.*** The density and intensity of land Uses permitted within a PDD shall conform with the Future Land Use Element of the City's Comprehensive Plan, in accordance with the categories of Planned Developments set forth below.

124.21 (D)(6) ***Platting.*** The property within a PDD shall be platted in conformance with the approved Master Development Plan.

§ 124.22 PLANNED EMPLOYMENT CENTER DISTRICT (PECD).

124.22 (A) ***Purpose of district.*** The Planned Employment Center District (PECD) is intended to encourage non-residential Development and certain residential Uses, which generate employment that is compatible with residential and other less intensive land Uses.

124.22 (B) ***Permitted Uses.*** No Building or Structure, or part thereof, shall be erected, altered, or used in whole or in part for other than one of the following Uses:

124.22 (B)(1) Planned light industrial parks, which may include research and development, assembly, and light manufacturing.

124.22 (B)(2) Planned office parks, which may include business and professional offices, medical facilities, and Private and commercial Schools.

124.22 (B)(3) Planned special complexes, which may include recreational, cultural, educational, adult residential facilities, or other community facilities.

124.22 (B)(4) All Uses permitted in the Commercial District (C-1).

124.22 (C) ***Common open space.***

124.22 (C)(1) All common open space shall be preserved for its intended purpose as expressed in the Master Development Plan. The developer shall choose one or a combination of the following three methods of administering common open space, subject to approval by the City, and the method chosen by the developer shall be stated in the Master Development Plan:

124.22 (C)(1)(a) Dedication to the City of the common open space. This method is subject to formal acceptance by the City in its sole discretion.

124.22 (C)(1)(b) Conveyance to one or more associations, nonprofit corporations, or other appropriate entities, provided all persons and entities owning property within the Planned Development are members of one or more of the associations, nonprofit corporations, or other entities so that the common open space will be used as specified on the Master Development Plan all common open space will be properly maintained.

124.22 (C)(1)(c) Retention of ownership, control, and maintenance of all common open space by the developer.

124.22 (C)(2) If the developer elects to administer common open space through one or more associations, nonprofit corporations, or other entities, said organizations shall conform to the following requirements:

124.22 (C)(2)(a) They shall be created prior to the sale of any property within a phase of the PECD.

124.22 (C)(2)(b) Membership shall be mandatory for all property owners within the Planned Development, and the organizations shall not discriminate as to race, color, religion, national origin, sex, age, marital status, political affiliation, their membership or shareholders.

124.22 (C)(2)(c) They shall:

124.22 (C)(2)(c)(1) Manage all common open space and Recreational and cultural Facilities that are not dedicated to the public.

124.22 (C)(2)(c)(2) Provide for the maintenance, administration, and operation of said land and any other land within the Planned Development not publicly or privately owned.

124.22 (C)(2)(c)(3) All privately owned common open space shall conform to the intended Use of and remain as expressed in the Master Development Plan through the inclusion of appropriate covenants in all conveyances of land within the PECD. These covenants shall run with the land and be for the benefit of present and future property owners.

124.22 (C)(2)(c)(4) All common open space and public Recreational and cultural Facilities shall be specifically included in the Development Plan schedule and be completed by the developer in accordance with such schedule.

124.22 (D) ***Land Use regulations.***

124.22 (D)(1) ***Minimum size.*** All planned employment centers shall provide for a minimum of ten acres of contiguous land, unless the City Commission finds that a tract which contains less than ten acres is suitable as a planned employment center by virtue of some unusual condition.

124.22 (D)(2) ***Minimum Lot area, distance between Structures, Frontage, and Setbacks.***

124.22 (D)(2)(a) No minimum Lot size shall be required within a Planned Employment Center District.

124.22 (D)(2)(b) No minimum distance between Structures shall be required within a Planned Employment Center District.

124.22 (D)(2)(c) Setbacks or yards are to be controlled by the site Development Plan rather than by the provisions of the zoning regulations that otherwise would be applicable. The provisions governing changes in the site Development Plan will apply.

124.22 (D)(3) ***Landscaping.*** Landscaping shall meet all requirements of the City Code provided that site plans may require additional area where such districts are adjacent to local areas of particular concern (LAPCs), natural resource areas (NRAs), parks, or residential zoning districts.

124.22 (D)(4) ***Signs.*** Signs within a planned employment center shall meet all requirements of the City Code.

124.22 (E) ***Procedure for rezoning to a Planned Employment Center District.*** The following applications, exhibits, and procedures shall be required when applying for rezoning to a Planned Employment Center District.

124.22 (E)(1) ***Application form.*** The Applicant shall complete a standard rezoning application form and submit it with the appropriate filing fee to the Planning and Zoning Department. Information necessary to review the impact of the proposed Development upon public services and facilities, including Traffic, drainage, and natural resources, shall accompany the application.

124.22 (E)(2) ***Site Development Plan.*** The Applicant shall submit a site Development Plan to be included with the rezoning request. The site Development Plan shall be adopted as part of the rezoning approval and shall specify Setbacks or yards, plot coverage, Height, Landscaping, Common Areas, drainage, internal circulation, and signage.

124.22 (E)(3) ***Design guidelines.*** Petitioner shall submit design guidelines which shall include, but not be limited to, the following and shall become a part of the PECD rezoning ordinance:

124.22 (E)(3)(a) Signage.

124.22 (E)(3)(b) Housing type.

124.22 (E)(3)(c) Minimum Lot size.

124.22 (E)(3)(d) Minimum Lot Frontage.

124.22 (E)(3)(e) Minimum home square footage, Building type.

124.22 (E)(3)(f) Maximum Height.

124.22 (E)(3)(g) Front, Side, Rear Street, Side yard Setbacks.

124.22 (E)(3)(h) Setbacks to Accessory Uses (pools, patios, etc.).

124.22 (E)(3)(I) Typical home Landscape.

124.22 (E)(3)(j) Street Landscape.

124.22 (E)(3)(k) Common Area Landscape.

124.22 (E)(3)(l) Lighting.

124.22 (F) ***Conformance to approved site Development Plan.***

124.22 (F)(1) After rezoning to Planned Employment Center District, no permits shall be issued by the City and no Development shall commence unless in conformance with the approved site Development Plan, unless a change or deviation is approved.

124.22 (F)(2) All changes will require an amendment to the zoning ordinance creating the PECD.

§ 124.23 AGRICULTURAL/ESTATE DISTRICT (AE).

124.23 (A) ***Purpose of district.*** The Agricultural/Estate District is intended to apply to those areas of the City the present or prospective Use of which is primarily agricultural. The regulations of this district are intended to protect, preserve, and enhance agricultural Uses in

compliance with the agricultural land Use designation of the certified Future Land Use Element of the City Comprehensive Plan.

124.23 (B) ***Permitted Uses.*** No Building or Structure, or part thereof, shall be erected, altered, or used, or land or water used, in whole or in part, for other than one or more of the following specified Uses:

124.23 (B)(1) Single-family Dwellings on a plot at least 87,120 gross square feet (minimum plot size), with 35,000 square feet net buildable area, in area, with a minimum 125 feet Street Frontage. The clustering of units is prohibited.

124.23 (B)(2) Publicly owned or operated Buildings and Uses, including community Buildings, Public Parks, and playgrounds, but excluding dumps, sanitary fills, or incinerators.

124.23 (B)(3) Groves, produce farms, truck gardens, horticultural farming, botanical gardens, floriculture, nurseries, sod farms, crop raising, hydroponic gardens, greenhouses, forestry, or beekeeping with Use or keeping of Animals only as incidental and accessory thereto.

124.23 (B)(4) Cattle or stock grazing, dairy farming, not including hog raising.

124.23 (B)(5) Raising of fish.

124.23 (B)(6) Driveways or access roads to property in a zoning district other than Agricultural/Estate.

124.23 (B)(7) Accessory Uses and Structures.

124.23 (B)(8) Keeping, boarding, or raising of Animals as an Accessory Uses to a residence on a minimum-sized plot. The total number of Animals on any minimum-sized plot as permitted in this subsection (8) shall not exceed four of any combination of horses, cattle, sheep, and goats; no more than ten of any combination of cats and dogs; and no more than 20 of any combination of fowl and rabbits. The total number of Animals permitted hereby shall not include offspring of any Animal under the normal weaning age for that Animal. Nor does this requirement refer to any Animal incidentally found which has been injured or Abandoned. Such Animal may be maintained or harbored until the Animal's state of health permits it to be returned to its natural habitat or to an appropriate agency caring for the welfare of Animals. Structures housing these Animals shall be a minimum of 150 feet from any plot line.

124.23 (C) ***Height.*** No Building or Structure shall be erected or altered to a Height exceeding 30 feet.

124.23 (D) ***Exception to minimum plot size.*** Plots for any permitted Use shall have a minimum area of 87,120 gross square feet and a minimum Frontage of 125 feet, except that a plot specifically delineated on a Plat as a single Lot, which Plat was recorded or had received final City

Plat approval prior to the effective date of this Section (October 5, 1998), may be utilized for a Single-Family Dwelling if the Plat has not less than 10,000 square feet of area and 100 feet of Street Frontage.

124.23 (E) ***Plot coverage.*** The combined area occupied by all main and Accessory Buildings and Structure shall not exceed 25% of the plot area for a plot.

124.23 (F) ***Yards.*** Every plot shall have front, side, and rear yards of not less than 25 feet.

124.23 (G) ***Minimum floor area.*** The minimum floor area of a Single-Family Dwelling shall be 1,000 square feet.

124.23 (H) ***Paved access to Structures.*** There shall be paved access, 12 feet in width, to all new Structures in excess of 1,000 square feet.

124.23 (I) ***Communication Towers.*** Any communication Tower that was constructed and operational on a parcel or plot within this district prior to October 5, 1998 shall be a legal, conforming Use and may be repaired or rebuilt if it is damaged or destroyed. Provided, however, such repair or reconstruction may not enlarge the Use that existed prior to damage or destruction.

124.23 (J) ***Special exceptions.***

The Uses that may be permitted as special exceptions are as follows:

124.23 (J)(1) Stables.

124.23 (J)(2) Animal hospitals, veterinary clinics, kennels, Animal boarding.

§ 124.24 CONSERVATION DISTRICT.

124.24 (A) ***Purpose of district.*** The Conservation District is intended to:

124.24 (A)(1) Apply to those natural reservation areas designated for conservation Use on the future land use element map series, including public lands which are conservation areas operated by contractual agreement or managed by a federal, state, regional, or local government or nonprofit agency.

124.24 (A)(2) Promote the acquisition, retention, and management of unique natural areas in order to preserve their Environmental, recreational, and other public benefits.

124.24 (A)(3) Protect publicly owned sanctuaries, preserves, Archaeological or historic sites, open space, natural areas, Ecological Communities, and designated wildlife management areas.

124.24 (B) ***Permitted Uses in Conservation District.*** No Building or Structure, or part thereof, shall be erected, altered, or used, or land or water used, in whole or in part, for other than one or more of the following specified Uses:

124.24 (B)(1) Passive Outdoor recreational Uses such as wildlife sanctuaries and feeding stations, nature centers and trails, Outdoor research stations, walkways, and Uses accessory to these Uses.

124.24 (B)(2) Uses that do not impair the natural ecosystem of the area and that are not in conflict with any applicable contractual agreement or management policies of the federal, State, regional, county, municipal, or nonprofit agency that manages the natural reservation.

124.24 (B)(3) Water control Structures and associated facilities.

SPECIAL DISTRICTS

§ 124.25 TOWN CENTER OVERLAY DISTRICT.

Development of property within the Town Center Zoning Overlay District shall be governed by, and comply with, the Design Guidelines set forth below. Those aspects of the Development that are not regulated by the Design Guidelines shall be governed by the underlying zoning district's provisions.

MASTER PLAN CONCEPTS

The Master Plan developed for Town Center at Weston provides a unique and pleasing environment for all proposed uses. This Master Plan was developed through a series of charettes led by Arvida/JMB Partners, the developer of Weston.

As part of this charette series, Arvida/JMB Partners involved local architects, landscape architects, in-house land development and management personnel, members of regional planning councils and local agencies, as well as a nationally recognized planning consultant, RTKL International, Ltd. and marketing consultants. The charettes were driven by a desire for Town Center to be respectful of the adjacent communities, as well as to provide necessary services to the community (Exhibits 1 & 2). This project would be developed in a manner that would be both aesthetically pleasing and functionally responsive within the economic parameters, which would make it a successful venture for Arvida/JMB Partners. A conceptual design was the final work product of this series of charettes (Exhibit 3). This conceptual plan integrates compatible uses, vehicular circulation, pedestrian linkage, and shared recreational areas to provide visual and functional continuity for the implementation of Town Center.

Using this conceptual Master Plan and the integration of architectural footprints as well as functionally responsive parking and service areas, an illustrative Master Plan is being prepared for Town Center, and will be submitted as part of the City of Weston's site plan review process.

All proposed uses, paving, parking and roadways have been designed considering the highest and best use of the land, ease of access and community needs. The plan integrates all required stormwater facilities and utility/infrastructure systems.

Key design criteria used to generate this Master Plan and critical to the success of Town Center is the use of shared parking. This shared parking criteria is important in order to minimize the amount of asphalt or non-pervious areas within Town Center and to allow for the concentration of green space to be used for buffering as well as both active and passive public activities while providing the total number of functional parking spaces required by a shared parking analysis.

USE STANDARDS

The Town Center Core has been divided into major use types (Exhibit 4). The mix of uses has been established to provide a balanced approach to the project. This balance will ensure a consistency of quality, provision for market demand and a compatibility of function to protect and enhance the Weston community and the development investment within Town Center.

The Town Center, comprised of the Town Center Core and the East and West Parcels (Exhibit 5), has been analyzed for the location of buildings, stormwater facilities, surface parking and ingress/egress. Restrictions noted are in the form of setbacks and buffers from property and/or right-of-way lines.

1. Within parcels, the building setback shall be 20′. Within the Town Center Core, the building setback is 15′ from the property line, except buildings along the existing lake shall be setback no less than 10′ from water's edge.

2. Service areas within parcels and Town Center Core shall be setback a minimum of 10′ from property line.

3. Within the Town Center Core, buildings shall be setback a minimum of five feet (5′) from internal streets.

4. Perimeter buffer areas within Town Center shall be:

    a. A minimum of five feet (5′) of pervious area on each parcel between adjacent parcel and a parking or vehicular use area.

    b. A minimum of twenty feet (20′) within the Town Center Core adjacent to the east parcel.

    c. A minimum of fifteen feet (15′) within the west parcel adjacent to the Town Center Core.

    d. A minimum of twenty-five feet (25′) along Bonaventure Boulevard.

    e. A minimum of ten feet (10′) along Three Village Road at the Town Center Core and twenty-five (25′) along Three Village Road at the east parcel.

f. A minimum of ten feet (10′) along Town Center Circle at the Town Center Core and twenty feet (20′) along Town Center Circle at the west parcel.

5. All berm heights are calculated from the adjacent crown of road elevation.

6. All Town Center required buffers along Three Village Road and Bonaventure Boulevard, excluding the linear park, shall have continuous screening and include a berm with an average height of three feet (3′). Screen may consist of berms and/or plantings with shade trees thirty-five feet (35′) on center. Maximum berm height shall be five feet (5′).

7. West service area of supermarket along Town Center Circle shall have a five-foot (5′) or greater berm with continuous hedge and shade trees twenty-five feet (25') on center.

8. Buffer adjacent to the Nursery and Town Center Circle shall have a continuous hedge and trellised vines shall be incorporated to soften building elevation. Large palms or shade trees shall be planted every thirty-five feet (35') on center.

9. In order to establish a consistent and comprehensive theme, large palm species (Royals, Bismarks, Phoenix) within minimum seven feet (7′) of wood can be used for required street tree plantings.

10. Perimeter buffers shall be installed prior to first building C.O.

DEVELOPMENT STANDARDS

To provide for a coordinated image within Town Center, standards for the Town Center Core and individual parcels outside of the Town Center Core have been established. Adherence to these standards will provide a high level of development quality that will ensure the maintenance of Town Center's standards for all future development.

The following items are to be specifically addressed:

A. Entry and Curb Cuts

Parcel entries shall provide for landscaped areas on either side of the driveway. A change of pavement at the driveway consistent with materials used within the Town Center Core shall be provided.

1. Cross parking and cross access may be provided for between the Town Center Core and parcels.

2. All undivided driveways shall have maximum width of twenty-four feet (24′). Divided driveways with medians shall have individual lanes of no more than fifteen

feet (15′) in width. Landscaped driveway medians shall be a minimum of eight feet (8′) in width and planted to the end in compliance with applicable codes.

B. Sidewalks/Pedestrian Linkage

1. A sidewalk and pedestrian linkage system has been designed to connect open space amenities with various land uses in Town Center. Sidewalks will be provided by each parcel owner on their property in accordance with the Master Plan.

2. In order to encourage the pedestrian context of Town Center all parcel sidewalks shall be a minimum of six feet (6′) wide. Along Main Street within Town Center core, sidewalks shall be a minimum of ten feet (10′) wide. Sidewalks will conform in color, finish and jointing with established Town Center Core standards.

3. Canopies for pedestrian zones are encouraged for shading and scale.

4. Sidewalks may be sheet drained, but shall not be used as swales.

5. Two percent (2%) average maximum cross slope shall be used on sidewalks.

C. Roadways/Driveways

1. In order to provide a pedestrian friendly environment and reduce vehicle operating speeds, 11-foot lanes (22-foot total) will be utilized in areas of high pedestrian concentrations. Roadway transition areas (from 24 feet to 22 feet) and areas of high pedestrian crossing will be delineated with contrasting paver block treatment rather than asphalt.

2. Driveway spacing will generally conform to the City's current land development regulations with the possible exception of delivery vehicle areas which will be encouraged to be segregated from other vehicle circulation to the greatest extent possible. Access to such loading areas may require special design considerations not specifically addressed in the land development code.

D. On-Grade Parking

1. On street parking shall be provided only on Main Street within the Town Center Core. This will help establish the pedestrian theme of the Town Center Core.

2. No on-street parking is allowed within Town Center parcels. Parking areas shall be sufficient to serve the business use conducted on each parcel.

3. Within the Town Center Core, no parking area or driveway shall be less than five feet (5') from the front or side of any building. For areas less than ten feet (10′) in width, landscape material shall be used to transition the ground to vertical plane.

4. Within the parcels, no parking area or driveway shall be less than ten feet (10') from any building front or less than five feet (5') from any building side or rear. For areas less than ten feet (10′) in width, landscape material shall be used to transition the ground to vertical plane.

5. Cross slopes in parking area shall be one half percent (½%) minimum and four percent (4%) maximum.

6. All parcel parking lots, drives and vehicular service areas are to be curbed, internally drained and paved.

7. It is the intention that due to the unique multi-use concept of Town Center, shared parking facilities will be an integral element of its success, both functionally and aesthetically. Shared parking areas between office, retail, restaurant and commercial uses will reduce the amount of open unused parking areas during non-operating hours of the various uses.
   a. An independent parking study in a form acceptable to the City, which includes but is not limited to information indicating that the uses are such that a sufficient disparity in peak demand for parking spaces exists to support the concept of shared parking.

   b. Required parking spaces may be permitted to be utilized for meeting the parking requirements of (2) or more separate permitted uses when it is clearly established that the two (2) or more uses will utilize the spaces at different times of the day, week, month or year. A recordable Declaration of Covenants, with the correct legal description, shall be submitted by Arvida/JMB in a form acceptable to the office of the city attorney. The Declaration of Covenants shall be recorded in the public records of Broward County at Arvida/JBM's expense, and shall run with the land. The Declaration of Covenants shall provide that the use or portion of a use, that requires the shared parking in order to obtain the necessary permits or licenses, shall cease and terminate upon any change in their respective schedules of operation that results in conflicting or overlapping usage of the parking facilities, and no non-residential use may be made of that portion of the property until the required parking facilities are available and provided. The Declaration of Covenants shall also provide that the City may collect attorney's fees if litigation is necessary to enforce the requirements of this section.

   c. No part of an off-street parking area required for any building or use by this section shall be included as a part of an off-site parking area similarly required for another building or use unless the type of use indicates that the periods of usage will not overlap or be concurrent with each other as determined by the City.

8. Parking lot layouts shall conform to the following dimensions:

   a. Parking aisles when not located perpendicular to building entries should have islands with sidewalks located in parking rows for pedestrian cross traffic.

   b. Ninety degree (90°) parking is encouraged with a minimum stall size of nine feet (9') x eighteen feet (18').

   c. Parallel parking is allowed with a minimum stall size of nine feet (9') x twenty-three feet (23') for off street and ten feet (10′) x twenty three feet (23') for on street applications.

   d. Handicap parking spaces shall be twelve feet (12') x eighteen feet (18').

   e. Two-way parking area driveways and cross aisles must have a minimum width of twenty-four feet (24').

   f. Within the Core, 45° angle parking may be used with a minimum stall size of nine feet (9') x eighteen feet (18').

9. Parking lot layouts shall provide landscaping in accordance with the following:

   a. Parking areas within the Town Center Core shall include a landscape area at the perimeter. These landscape areas may include sidewalks, pavers, plantings and grass in order to encourage pedestrian circulation.

   b. Minimum of eleven feet (11′) by fifteen feet (15′) in size, shall be provided for every ten (10) parking stalls.

   c. In the Town Center Core internal landscape islands may include hardscape, tree plantings and planters with tree and understory plantings along pedestrian corridors within parking areas.

   d. Terminal islands, eleven feet (11') wide are to be provided at each parking row.

   e. Parcel interior islands, shall be eleven feet (11') wide by fifteen feet (15') long separated by no more than ten (10) parking spaces.

   f. In parcels, terminal islands with walkways shall be fifteen feet (15') wide with a minimum nine foot (9′) wide planting area.

   g. Parcel interior islands with walkways shall be sixteen feet (16') wide with a minimum nine foot (9′) wide planting area.

   h. Berms and plantings shall be used to screen parking areas.

10. In order to encourage pedestrian and vehicular safety; posted speed limits within Town Center shall be 15 mph.

E. Structured Parking

1. Parking structures shall be designed to be architecturally compatible with the building(s) they service.

2. Structures are to be located and oriented on the site to have the least visual impact to roadway and main approach traffic as is practical.

3. There are to be a minimum of two (2) entrance/exits per garage.

4. At garage entry there must be adequate stacking area for cars.

5. All parking structures over one (1) story shall have an elevator.

6. The sides of a parking structure facing a roadway or opposite a face of a building shall be provided with planters over fifty percent (50%) of the face length along each level. On facades without planters, the use of trees, palms and understory plantings shall be used to compliment the architecture and provide buffering.

7. Maximum height of structured parking shall be forty feet (40′)

F. Exterior Lighting

1. Site lighting is intended to be subtle, and to establish a consistency and hierarchy of lighting types. Exterior lights shall be used to accent entrances and special features. Light intensity shall be no greater than required for automobile and pedestrian safety. To minimize the number of lighting standards, wherever possible overflow light from inside the building shall be used. The lighting source of fixtures and flood lighting shall be screened from view, if it is of such intensity as to be deemed a source of glare. Lighting shall not illuminate adjacent parcels and uses.

   Lighting shall be designed to reflect the architectural style of the building, be appropriate in scale, light quality, coloration, and light level for the intended purpose it is to serve. Lighting for parking shall be compatible with the lighting present on adjacent streets and peripheral parcels.

2. Location and Type

   a. All lighting for parking within parcels shall be metal halide with a maximum height of luminare and pole of twenty-four feet (24'). Pole and luminare shall be consistent with the established Town Center Core lighting. Light levels shall be maintained at a minimum of one footcandle with a maximum uniformity ratio of 12:1.

   b. All lighting for parking within the Town Center Core shall be metal halide with a maximum thirty-five foot (35') pole height. Light poles within two

hundred and fifty feet (250′) of residentially zoned properties shall be limited to a height of twenty-four feet (24′). Pole and luminar shall be shoebox style. Light levels shall be maintained at a minimum of one footcandle with no offsite spillage.

c. Pedestrian walkway and internal drive lighting will be provided by freestanding pole with globe-like luminar with refractors. Height of these fixtures will be no greater than twenty-four feet (24') so as to promote a pedestrian scale.

3. Sign lighting shall be required for all signage, except for the directional signs. Sidewalk, roadway and parking area lighting is mandatory. Internally illuminated signage is to be used.

4. Flood lighting fixtures on buildings are only allowed in service areas. Flood lighting of any building is prohibited. However, up or down lighting of specific architectural elements of a building shall be permitted. Balcony and soffitt down lighting is permitted.

5. Flood lighting may be used to illuminate key architectural and identification elements including but not limited to: belltower, art, bandshell, trellis, entry monuments and signage.

6. Fixture and Lamp Standards: To create a uniformity of look, the manufacturer's and model numbers of site lighting fixtures to be used by Arvida/JMB Partners for the streets will be furnished to parcel owner upon request.

7. Accent Lighting: To enhance on site art, architecture and landscaping, accent lighting will be used within Town Center. Accent lighting will include; uplighting, moonlighting, ribbon-lighting and spotlighting.

G. Signage

1. Town Center signage will conform in style and materials, but use of multiple colors and print types will be encouraged. Location of signage will be a major element in establishing the design theme continuity within Town Center. All signage shall conform to all applicable clear sight and clear recovery zone requirements.

Only approved wall signage will be provided for freestanding uses within Town Center Core. Exception: The bank site adjacent to Bonaventure Boulevard shall be permitted one freestanding sign meeting the parcel entry signage requirements.

All signage heights are calculated from the adjacent crown of road elevation.

Details of signage including location, type, size, illumination and quantity are shown in Exhibit 6.

2. Entry Signage

Entry signage features are to be located along Bonaventure Boulevard, Arvida Parkway, Three Village Road and Town Center Circle. Two types of entry signage will be incorporated for entries into Town Center (Exhibit 5).

a. Bonaventure Blvd./Arvida Pkwy. Entry Feature

The entry features for Town Center at both Bonaventure Boulevard and Arvida Parkway will include a freestanding stucco and metal architectural feature with signage. In addition, planter walls with accent landscaping may be located at the corners of the intersections. The feature, sign and walls will be flood lit from the planting beds located at the base of the signs and walls. The sign and the associated walls will contain the Town Center logo and establish the design theme for all signage located within the Town Center. The signage will be limited to forty (40′) square feet. The maximum overall height of these entry feature shall not exceed twelve feet (12') from adjacent crown of road.

b. Three Village Road/ Town Center Circle Entry Feature

The entry feature at both Three Village Road and Town Center Circle will consist of a feature similar to the Bonaventure and Arvida entries. The corners of the intersection will however, not include planting walls but rather planting beds of themed landscape material. The signage will be limited to forty (40′) square feet. This entry feature shall not exceed eight feet (8′) in height from adjacent crown of road.

3. Building Signage

Building signs, logos and insignias shall be channel style and color neon backlit. The use of exposed neon signage is limited to the two (2) main pedestrian parking accessways along the interior of Main Street within the Town Center Core and visible only from the interior of Town Center.

Non-retail building identification signage shall be located at the top floor level of a multi story building. No sign shall extend above the roof eave or parapet line. All building wall signage shall not exceed twenty four inches (24") in height and eighteen feet (18') in length. All illumination shall be white.

Freestanding building identification signage shall be located at the top floor level of a multi story building. No sign shall extend above the roof eave or parapet line. All building wall signage shall not exceed twenty four inches (24") in height and eighteen feet (18') in length. All illumination shall be white. Freestanding buildings include restaurants and banks.

Retail tenant identification signage shall be limited to eighteen feet (18′) in length and sixteen inches (16″) in height and shall be located on the building wall or awning/canopy above the principal entry to the tenant space.

Supermarket signage will be limited to one wall sign with lettering no more than sixty inches (60″) in height and a total coverage area less than 110 square feet.

Retail building identification signage is prohibited.

4. Traffic Signage

Traffic signs and street signs both within the Town Center Core and within parcels shall conform to design, number and approved location requirements as per the City of Weston code. All information shall use international symbols and will be designed to compliment all other Town Center signage.

5. Temporary Signage

Temporary construction signage shall be permitted during the construction of a permanent facility only. One single-sided temporary project sign shall be permitted per parcel and shall be located parallel to the street no less than twenty-five feet (25') from the right of way line. Temporary signs shall not be lit or use reflective tape or paint.

During construction, temporary signage shall be ground mounted or mounted to a maximum height of eight feet (8'-0") above grade with maximum dimensions of four feet (4'-0") by eight feet (8'-0") and shall be approved. The temporary signs must be removed immediately upon completion of construction.

6. Directory Signage

Directory signage will be wall mounted on a building or as an integral part of a free standing kiosk. Wall mounted directory signs shall be no more than forty-eight inches (48″) by forty-eight inches (48″) and limited to two (2) signs per building. Kiosk directory signage shall be limited to forty-eight inches (48″) by forty-eight inches (48″). The kiosk shall be no more that twelve feet (12′) in overall height.

7. Directional Signage

Directional signage for the Town Center Core shall be limited to five feet (5′) in height by three feet (3′) in width. Directional signage may be post/column mounted or at grade.

8. Non-Retail Tenant Signage

Maximum 16″ x 20″ suite identification signage and below it 6″ x 16″ hours of operation, times and phone number adjacent to entry door limited to one (1) per tenant.

Non-retail street signage shall be cast bronze or brass and shall not exceed six inches (6″) in height nor twelve feet (12′) in length and shall be limited to first floor tenants. Non-retail tenant signage shall be located on the building wall at a height no greater than twelve feet (12′) above the building finished floor elevation.

9. Parcel Entry Signage

Parcel signage is intended to identify a parcel's business and facilities. Each parcel will be permitted one free standing double-sided sign per street frontage. This sign shall be a primary tenant/building identification sign constructed perpendicular to the roadway and be located totally within the parcel. Parcel entry signage shall not exceed six feet (6') in overall height.

All parcel signage shall be located within landscape beds on the parcel. The parcel signage shall be set no less than ten feet (10') from the front and side property lines and shall require five feet (5') set backs on all sides from buildings and/or parking areas. The parcel sign must be externally illuminated by ground spotlights only.

Information shall be limited to the building number and name and its logo if said logo is a lettering style logo. The company's name and logo shall be presented for approval relative to style, color, format and size.

If the building has more than one tenant, the parcel sign may set forth the name of the building or the names of the tenants occupying 30% or greater of the building. Tenant names shall all be in the same style and size of letters as approved. All information shall be contained within the approved signage area.

H. Service Areas

1. Within the Town Center Core the number and size of loading spaces are as follows:

   a. Retail Sector: three (3) – twelve foot (12') by forty-five foot (45') spaces and two (2) ten foot (10') by twenty-five foot (25') spaces.

   b. Office Sector: three (3) – ten foot (10') by twenty-five foot (25') spaces.

   c. Supermarket Sector: one service yard per supermarket requirements.

   d. Freestanding Restaurant: one (1) – ten foot (10') by twenty-five foot (25′) space.

   e. Freestanding Plant Nursery: one (1) – ten foot (10′) by twenty-five foot (25') space.

   All loading spaces shall have a minimum fourteen-foot (14′) vertical clearance.

2. No loading or servicing for parcels shall be conducted between a building and any street. All loading spaces shall conform to applicable City of Weston ordinances including size, location and quantity.

3. In order to provide for improved safety and aesthetics, a segregated entry and exit for service vehicles have been provided for the supermarket in the Town Center Core. The entry will be one way from Town Center Circle and the exit will be one way onto Three Village Road.

4. Loading and servicing areas for parcels shall be designed so that the entire operation is conducted within the confines of the parcel.

5. Loading and servicing areas for parcels shall be screened from streets and building entrances and shall be designed as an integral part of the building architecture.

6. The maneuvering of trucks and trailers shall be confined insofar as possible to the rear parking areas of a parcel.

7. No articles, goods, materials, fixed machinery or equipment, vehicles, trash, animals or similar items shall be stored or kept in the open or exposed to view from adjacent parcels, streets and sidewalks.

8. Vehicles shall be parked in approved parking areas only. No vehicles are to be stored for more than 24 hours.

9. Within the Town Center Core, loading/service and trash collection can be carried out in shared locations. This shared use will provide additional space for buffering and landscape areas. The loading/service space will be measured from the dumpster enclosure.

10. All solid waste facilities and storage areas for restaurants shall be maintained inside an air-conditioned space. Solid waste will be permitted for deposit into dumpsters no more than 8 hours prior to collection. Collection times shall be scheduled and posted so as not to conflict with the loading and unloading activities.

11. All freestanding dumpster enclosures, transformers, mechanical equipment and other utility equipment or enclosures shall be buffered utilizing hedges, flowering shrubs and/or vines equal in height at time of installation without impacting accessibility or service.

I. Architectural Criteria

1. General Intent and Provisions

a. Architectural design of all Town Center Core and parcel buildings shall be designed to be compatible with one another. Superior design and quality materials are required. The design of buildings adjacent to lakes and stormwater detention areas shall address the impact on views from across the water. All service area walls and other screening elements must be compatible with the building architecture. Large facades with no architectural delineation shall be prohibited.

b. All buildings must be designed by a Florida registered Architect.

c. Rooftop equipment, antennas, and similar protrusions shall not project above the parapet. The building shall include parapet walls, individual screens or other architectural building elements to completely screen the offensive elements from view. All screening elements shall relate to the building's style of architecture and where at grade shall be landscaped. Solar collectors, satellite dish, etc., shall only be permitted at approved locations.

d. Downspouts, roof ladders, and related elements shall be designed to be compatible with the building architecture and avoid staining the building façade.

e. No walls may be constructed within the landscape easements or nearer than five feet (5') from the side or rear property line. All walls shall be compatible with the surrounding architecture. Walls shall not be constructed in front yards or on site areas visible from major project streets, except within the Core, where buffer walls may be constructed to reduce visibility of utilities.

f. The creation of outdoor use areas incorporated into the landscape and building design is encouraged to facilitate public activity. These areas shall provide seating, outdoor dining and meeting space, formal gardens consisting of courtyards, sculpture gardens or lawns featuring fountains and pools, and shall provide exercise and other recreational uses.

2. Design Strategies

a. A relatively wide variety of architectural design and materials is permitted. However, it is intended that a basic harmony of architecture shall prevail among the several buildings so that a consistent style is achieved within Town Center.

b. The basic architectural style of Town Center shall be modern and unembellished except for articulation by building form, window treatment, and roof or entrance features.

c. Building height within the Town Center Core shall not be limited so as to allow for building massing that will create a captured pedestrian experience. Elements such as cupolas and architectural features are contemplated in the conceptual design (Exhibit 3) to be at a height of fifty feet (50′). The main identification element of Town Center, the belltower, shall be a maximum of fifty-five feet (55′) in overall height.

d. Building height within the west parcel shall be to a maximum of or forty-six feet (46′) in height. In order to allow for a vertical transition to the Town Center Core, the third floor of any building on the west parcel shall step away from the Town Center Core and lakefront park. This shall be achieved by providing only 50% of the second floor area on the third floor and that this area be provided along the west side of the building.

e. In general, the following shall apply to the design of building exterior appearance in order to promote harmonious building design:

1. The height of buildings shall be visually reduced by the use of landscape, texture, materials and color.

2. Buildings shall be designed to be attractive from all road frontages they are adjacent to.

3. No portion of the roof top equipment may project above the parapet including all mechanical, electrical equipment, vents and stacks.

4. Colors, materials and finishes shall be coordinated on all exterior elevations to achieve total continuity of design throughout Town Center. The Town Center Core and parcels shall incorporate a color palette of no less than twelve (12) distinct colors.

5. All service courts and loading areas shall be screened from view of project roadways and driveways so as to be an integral part of the design of the building architecture or by location on the site to the rear of public areas. Mature landscape materials, which complement the building architecture, may also be used in screening these uses.

6. Buildings shall be separated within and between parcels according to Setback Requirements established in the Design Guidelines.

7. Building massing within the Town Center Core shall conform to the overall intent conveyed in the Conceptual Design Master Plan (Exhibit 3). Recognizing that building mass will provide a sense of enclosure and containment along the street which will define the pedestrian experience being sought at Town Center, careful consideration to building height, placement and volume is of extreme concern. Buildings shall complement the pedestrian ways and address the 'sidewalk to building' intersection through horizontal displacements so as to create areas for activities like outdoor dining, window shopping and leisurely strolling within a more 'urban' setting than that which can be currently found in Weston.

   Building massing together with building height shall be used to define views and streetscapes which will provide a "pedestrian experience" by capturing vistas of features such as the Bell Tower and focusing on the corporate office on the water.

f. Roofs, roof lines and roof materials are recognized to create not only shelter, but to be possibly the single most important element in contributing to the overall building elevation and aesthetics. Roofs within the Town Center are to be a mix of flat decks (with parapets and tiled mansards) and hipped and/or gabled roofs. Roof shall be of the Spanish "S" style tile (or barrel) or standing seam metal, with a consistency of colors blends from roof to roof that will give uniformity through compatibility to the overall look of the Town Center.

   Roof colors are to be chosen from a minimum color palette of eight (8) colors (for tiled roofs) or four colors in the case of metal roofs. For tiled

roofs, a minimum of three but not more than four (4) colors will be blended to create a roof color.

Inclined roof pitches are to be minimum 4 in 12 pitch and should vary in height to create movement and elevation interest across not less than 50% of the facade. The use of features such as clocks, towers, canopies, colonnades, loggias, balconies, cloth awnings and other architectural projections of aesthetic quality are encouraged.

Roof projections such as, but not limited to: A/C equipment, exhaust hoods, refrigeration, vents and vent shafts shall be hidden from view by means of parapets or roof designs. No other screening devices shall be allowed.

3. Building Coverage

a. Building coverage may be maximized, provided that utility and maintenance easements and sufficient parking can be provided within these limits and established setbacks are adhered to.

b. Building coverage and impervious surface coverage shall be as governed by the City of Weston Ordinances.

J. Landscape and Irrigation

1. Landscape Design Standards

Landscape design standards have been established to create and perpetuate the quality, character and image of Town Center. A complimentary series of perimeter landscaping and open space, with a linear park will be constructed to form a system of green spaces linking the various uses within Town Center. Unity of design shall be achieved through the repetition of plant materials and other landscape and hardscape materials throughout Town Center.

All planting area widths shall be inclusive of adjacent type “D” curbing.

All requirements of the City of Weston Landscape Code not specifically addressed in this ordinance shall conform to the City of Weston Landscape Code.

2. Landscape Design

a. Landscape plans and specifications shall be prepared by a licensed Landscape Architect registered in the State of Florida.

b. Landscape design at intersections within Town Center right-of-ways shall be formal. Shade or large palm trees shall be installed on both sides of parcel entrance drives/roads. Individual trees should be a maximum of thirty-five feet (35') on center to provide a major impact statement.

c. Loose, informal arrangements of trees in general open areas should be clustered to provide a natural appearance. Transplanting of shade trees six

inches (6") to ten inches (10") in caliper is encouraged. Street trees shall be spaced a maximum of thirty-five feet (35') on center.

d. Required visibility shall be provided at all intersections. Berms, ground cover and shrubs shall not exceed a maximum height of two feet (2') within visibility zones at intersections as defined by local or state codes. Trees shall be positioned to not impede visibility.

e. Evergreen shrubs and/or berms shall be provided to screen parking and service use areas. Planting for the purpose of screening shall be a minimum of twenty-four inch (24") height at time of installation and reach a minimum height of thirty-six inches (36") within a 12-month period from time of installation.

f. Landscaping of adjacent parcels shall be considered in the development of a landscape design to provide continuity within Town Center. Parcels shall not be landscaped to have an "individual" character at the property line of adjacent existing landscaping. Single hedgerows along property lines are discouraged. Massings of trees, palms and shrubs are encouraged.

g. Landscape material, especially shrubs, ground cover and seasonal color shall be spaced to provide 50% coverage at time of planting and 100% in six months.

h. Non-white decorative stone may be used but shall not be accepted as a substitution for groundcover or mulch.

i. A minimum of 1 tree per 375 square feet of landscaped buffer area on the West Parcel adjacent to the Town Center Core shall be required. The required landscape buffer between the Town Center Core and the east parcel will be provided as part of the Town Center Core requirements.

j. Landscape plans shall indicate all proposed utilities, site lighting, fire hydrants, backflow preventers, stop signs, meter banks, and proposed contours.

k. All landscape plans and specifications shall meet or exceed minimum standards as required herein.

l. The use of uniform seasonal color throughout Town Center shall be implemented.

m. The use of freestanding, movable planters with evergreen plants and seasonal color shall be used throughout pedestrian areas of the Town Center Core. A minimum of one (1) twenty-four inch (24") diameter planter shall be provided for every twenty-five (25) linear feet of Main Street.

n. Excluding the linear park, sod shall account for no more than 50% of the provided pervious area within the Town Center Core.

o. 20% of the vehicular use area (excluding the linear park) within the Town Center Core shall be provided as landscaped area.

p. 50% of the required planting areas within Town Center shall be native Florida species. The existing on-site native plant communities (littoral shelves) shall be used to meet the native shrubs requirement for the Town Center Core.

q. All required ecological community plantings required for Town Center have been provided for in the existing littoral shelf located in the existing lake adjacent to Arvida Parkway, Bonaventure Boulevard and Town Center Boulevard

3. Berms

a. Slopes of all berms shall not exceed 2:1.

b. Berms shall be undulating both vertically and horizontally.

4. Landscape Standards for Vehicular Use Areas

Vehicular use areas shall be landscaped to reduce the scale of large paved areas and provide climate control of parking lots.

a. Berms, trees and evergreen hedges are required within all perimeter planting areas adjacent to right-of-ways as outlined in the Use Standards to provide screening and pedestrian directional flow.

b. A minimum of one (1) tree shall be provided in each island.

c. In parcels, landscape islands between parking spaces shall be a minimum of one hundred sixty-five (165) square feet and contain at least one (1) shade tree.

5. Drainage Retention Areas

Drainage retention/detention areas are to be planted and sloped to blend into the adjacent landscape area.

6. Landscape Lighting

Landscape accent lighting of tree canopies, pathways and general illumination is encouraged.

a. Above ground landscape lights must be screened within planting beds.

b. Above ground landscape lights are prohibited in lawn areas.

c. Well lights only are approved for use in lawn areas.

d. Landscape lights shall be aesthetically compatible with building and site lights.

e. Well lights in tree grates will be used to uplight trees in pedestrian areas of the Town Center Core.

7. Landscape Irrigation System

All landscape areas shall be irrigated with an automatic irrigation system of approved design to provide proper plant growth.

a. The automatic controlled irrigation system shall be provided for one hundred percent (100%) coverage with one hundred percent (100%) overlap of all landscaped areas.

b. The irrigation system shall be of similar equipment and standards as the existing irrigation system within Arvida's Weston and utilize rust free water.

c. The system shall be maintained in optimum operating condition at all times.

d. Operation of irrigation systems shall be timed to operate during evening and early morning hours to minimize evaporation and disruption to vehicular and pedestrian traffic. The system will include a rain sensor.

e. No irrigation shall overspray walk-ways.

8. Plant Material

All parcels within Town Center shall provide a well-defined, maintained and dense landscape appearance.

a. All plant material for Town Center will be Florida Fancy or Florida Grade No. 1 as defined by the "Florida State Plant Board Standards for Nursery Stock" and "Grades and Standards for Nursery Plants", State of Florida, Department of Agriculture. Exception; large relocated specimen trees in excess of 6" caliper shall be required only to meet the approval of Arvida/JMB's landscape architect and City staff.

b. Plant material shall be installed in accordance with sound horticultural practices.

c. All plant material shall have a minimum 1-year guarantee beginning at final completion of installation of 100% of all plant material as per plans and specifications.

d. Installation of 100% of landscape material and irrigation to be complete by opening of building for tenant use.

e. Trees

1. All trees are to be specimen quality, with vigorous growth and in a healthy condition.

2. The canopy of trees is to be dense, and full headed 360° at time of installation.

3. Shade Trees

a. All shade trees shall be twelve feet (12') overall height with a minimum two and one half inch 2.5" DBH and a minimum six foot (6′) spread at time of installation.

b. All shade trees shall have a minimum four and one half foot (4½′) of clear trunk, unless otherwise noted and approved.

c. Shade trees shall reach a minimum height of thirty feet (30') and a minimum canopy spread of twenty feet (20') at maturity.

4. Accent Trees

a. All accent trees shall be ten feet (10') over all height with a minimum 2" DBH at time of installation.

b. All accent trees shall have three feet (3') clear trunk minimum at time of installation.

5. Palm Trees

a. Large Palm Species: (Royal Palms, Bismark Palms, Date Palms, etc.) When used as an overstory tree shall have a minimum seven feet (7′) of wood. These palms shall be equivalent to a shade tree for calculation of required plantings.

b. All other palm trees used as an overstory plant in non-paved areas shall be a minimum of eight feet (8') clear trunked, clustered a minimum of three (3) per planting in planting beds, and spaced so as not to inhibit the normal growth

characteristic of the palms. In locations where tree grates are used, individual palms are permitted.

c. Due to the urban pedestrian context of the Core, palm trees can make up 40% of the City required tree requirements.

9. Shrubs

a. All shrubs to be minimum 3-gallon containerized, dense, twenty four-inch (24") height by fifteen inch (15") spread minimum, at time of installation.

b. All shrubs used as hedges shall be installed at no more than twenty-four inches (24”) on center and shall be touching at installation.

10. Ground Cover and Vines

a. All ground cover to be dense, 1 gallon containers minimum at time of installation.

11. Grass

a. All grass areas to be sodded with St. Augustine “Floritam” (Stenotaphrum secundatum)

12. Seasonal Color

a. All seasonal color to be 2-1/4" containers minimum (except bulbs) at time of installation.

13. Plant Palette

At least seventy percent (70%) of all required trees and plant materials shall be from the recommended plant palette. However, no more than forty percent (40%) of required trees shall be of a palm species.

At least fifteen percent (15%) of entry landscape planting at parcel signage and five percent (5%) of plantings adjacent to front of parcel buildings shall incorporate the approved seasonal color plant material.

The following plant list is the recommended plant palette:

	Botanical Name	Common Name
Shade Trees:	Acer rubrum	Red maple
	Bauhinia spp	Orchid tree
	Bursera simaruba	Gumbo limbo
	Conocarpus erectus	Green buttonwood
	Delonix regia	Royal poinciana
	Peltophorum ptercarpum	Yellow poinciana
	Quercus laurifolia	Laurel oak
	Quercus virginiana	Live oak
	Swietenia mahagoni	Mahogany
Accent trees:	Callistemon viminalis	Weeping bottlebrush
	Cassia surattensis	Glaucous cassia
	Calophyllum brasilense	Beauty leaf
	Hibiscus spp	Hibiscus standards
	Lagerstroemia indica	Crape myrtle
	Ligustrum japonicum	Wax privet
	Tabebuia caraiba	Silver trumpet
	Tabebuia heterophylla	Pink trumpet tree
Palms:	Bismarkia nobilis	Silver bismark palm
	Phoenix canariensis	Canary Isl. date palm
	Phoenix roebelenii	Pygmy date palm
	Roystonea elata	Florida royal palm
	Sabal palmetto	Cabbage palm
	Syagrus romanzofiana	Queen Palm
	Washingtonia robusta	Washington Palm
Shrubs:	Bougainvillea spp.	Bougainvillea
	Chrysobalanus icaco	Cocoplum
	Ixora 'Nora Grant'	Ixora
	Jasminum volubile	Wax jasmine
	Myrica cerifera	Wax myrtle
	Philodendron selloum	Philodendron

Philodendron 'Xanadu'	Xanadu philodendron
Podocarpus macrophyllus	Yew podocarpus
Schefflera arboricola	Dwarf schefflera
Viburnum odoratissimum	Sweet viburnum

Seasonal Color: Submit proposal for review and approval.

14. Prohibited Plant Species.

The following plant species are prohibited from use because of their invasive growth characteristics:

Casuarina equisetifolia	Australian Pine
Melaleuca quinquenervia	Punk Tree
Schinus terebinthifolius	Brazilian Pepper

K. Landscape, Grading and Drainage

1. Site grading shall be done to preserve and enhance the topographic features and to provide positive drainage.

2. No slope of any type shall be steeper than 2:1. Where space limitations demand, terracing with approved retaining walls shall be utilized. Where retaining walls are required, materials shall be compatible with the site standards.

3. Berms, channels, swales, etc. shall be graded as to be an integral part of the grading, and designed with smooth transitions between changes in slope. Berms should not interrupt swale drainage.

4. Surface drainage shall be collected on site and connected to underground storm drains. Drainage is to be conveyed in accordance with the master drainage plan.

5. Run-off should be directed away from building pads at a minimum slope of two percent (2%) in landscape areas.

6. Drainage from roof tops shall not directly outfall into planted or pedestrian areas.

7. Grade bottom of landscape swale: one percent (1%) minimum slope; side slopes: 6:1 or 7:1 preferred.

L. Landscape Construction Procedures and Precautions

1. The following measures are to be incorporated to minimize soil erosion by water and wind.

   a. Remove no more vegetation than necessary.

   b. Install temporary mulching on areas to be left bare of plant material for an extended period of time.

   c. Provide temporary ditches, dikes, desilting basins and/or vegetation to remove sediment from run-off water during development.

2. The construction personnel are responsible for knowing the location of existing utilities and must protect existing utilities during the construction.

3. Construction sites shall be maintained in a neat and orderly manner. All trash shall be kept in enclosed containers and removed frequently.

4. Construction access shall be coordinated with Arvida/JMB. Special care shall be taken to protect existing pavements and landscaping from damage.

5. Approval shall not be required for the temporary storage of materials, equipment and supplies needed for the construction of permanent improvements upon a site, provided they are completely removed immediately upon completion of construction.

M. Landscape Maintenance

Landscape maintenance shall be of highest quality to provide at all times a clean, orderly, and manicured appearance.

   a. All dead or dying plant material shall be removed immediately.

   b. Replacements of removed plant material shall be made within a fifteen (15) day period of beginning at date of removal.

   c. Sites shall be policed regularly to eliminate on-site litter.

   d. A seasonal color program shall accompany the landscape maintenance proposal.

   e. Seasonal color shall be provided continually in Winter, Spring, Summer, and Fall. "Spent" plant material shall be replaced immediately.

   f. All landscape areas shall be kept weed free.

g. Landscape areas shall be watered, fertilized, cut, pruned, and treated for insects regularly to maintain a healthy, vigorous, and well-kept appearance.

h. Landscape maintenance of parcels is the responsibility of the respective owners.

i. Landscape maintenance of all right-of-ways, common open space, and conservation areas are the responsibility of Arvida/JMB Partners or its designee.

j. Maintain mulch in a clean and neat condition with a minimum three-inch (3") cover in all planting beds. Restore as necessary with clean mulch of the same type as that at installation.

k. Fertilization shall be a part of the required maintenance activities. Fertilizer shall be applied following manufacturer's specifications. Any evidence of nutrient deficiency shall be addressed during fertilization.

l. The irrigation system will be a required portion of the maintenance activities to ensure lawns and plantings receive sufficient water to maintain healthy growing conditions.

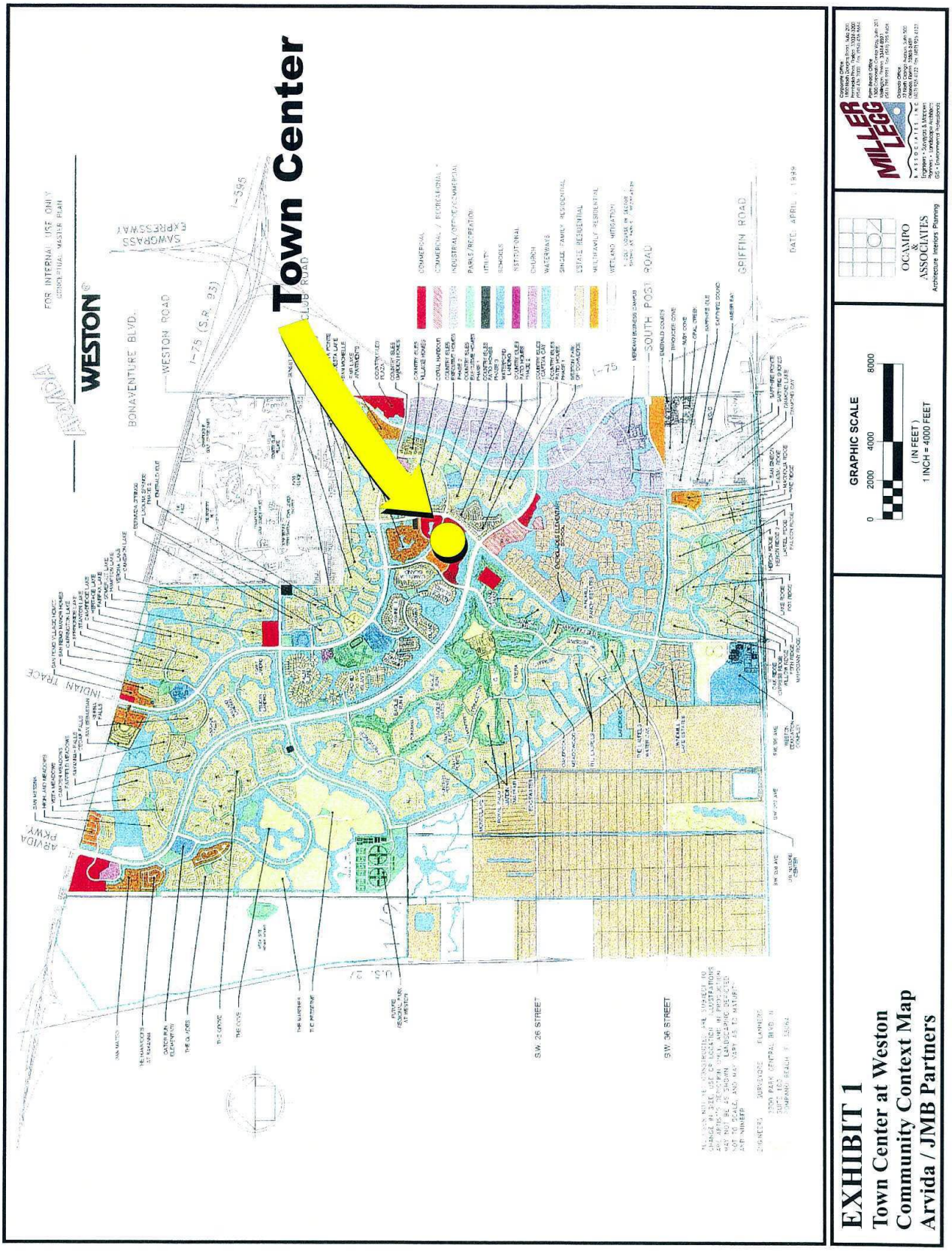
Town Center
WESTON
FOR INTERNAL USE ONLY
CONCEPTUAL MASTER PLAN
BONAVENTURE BLVD.
WESTON ROAD
I-75 (S.R. 93)
I-595
SAWGRASS EXPRESSWAY
SOUTH POST ROAD
GRIFFIN ROAD
INDIAN TRACE
ARVIDA PKWY.
S.W. 26 STREET
S.W. 36 STREET
COMMERCIAL
COMMERCIAL / RECREATIONAL
INDUSTRIAL/OFFICE/COMMERCIAL
PARKS/RECREATION
UTILITY
SCHOOLS
INSTITUTIONAL
CHURCH
WATERWAYS
SINGLE FAMILY RESIDENTIAL
ESTATE RESIDENTIAL
MULTIFAMILY RESIDENTIAL
WETLAND MITIGATION
DATE APRIL 1, 1999
GRAPHIC SCALE
0 2000 4000 8000
(IN FEET)
1 INCH = 4000 FEET
OCAMPO & ASSOCIATES
Architecture Interiors Planning
MILLER LEGG
EXHIBIT 1
Town Center at Weston
Community Context Map
Arvida / JMB Partners

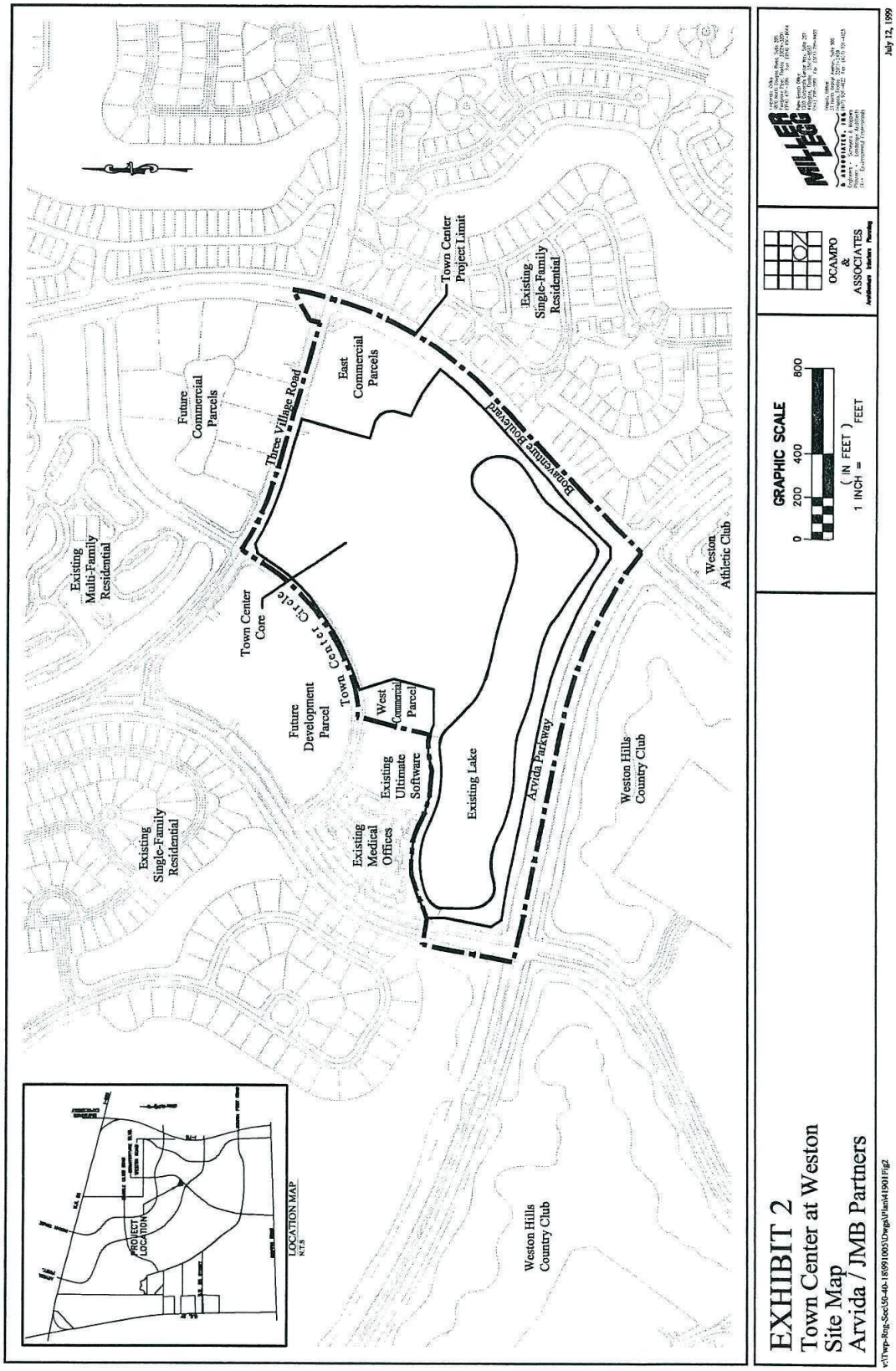
Town Center Project Limit
Existing Single-Family Residential
East Commercial Parcels
Future Commercial Parcels
Three Village Road
Boowaunee Boulevard
Existing Multi-Family Residential
Town Center Core
Town Center Circle
Future Development Parcel
West Commercial Parcel
Existing Ultimate Software
Existing Medical Offices
Existing Lake
Arvida Parkway
Weston Athletic Club
Weston Hills Country Club
Existing Single-Family Residential
Weston Hills Country Club
PROJECT LOCATION
LOCATION MAP
N.T.S.
GRAPHIC SCALE
0 200 400 800
(IN FEET)
1 INCH = FEET
OCAMPO & ASSOCIATES
Architecture Interiors Planning
MILLER LEGG & ASSOCIATES, INC.
July 12, 1999
EXHIBIT 2
Town Center at Weston
Site Map
Arvida / JMB Partners

EXHIBIT 3
Town Center at Weston
Conceptual Design
Arvida / JMB Partners

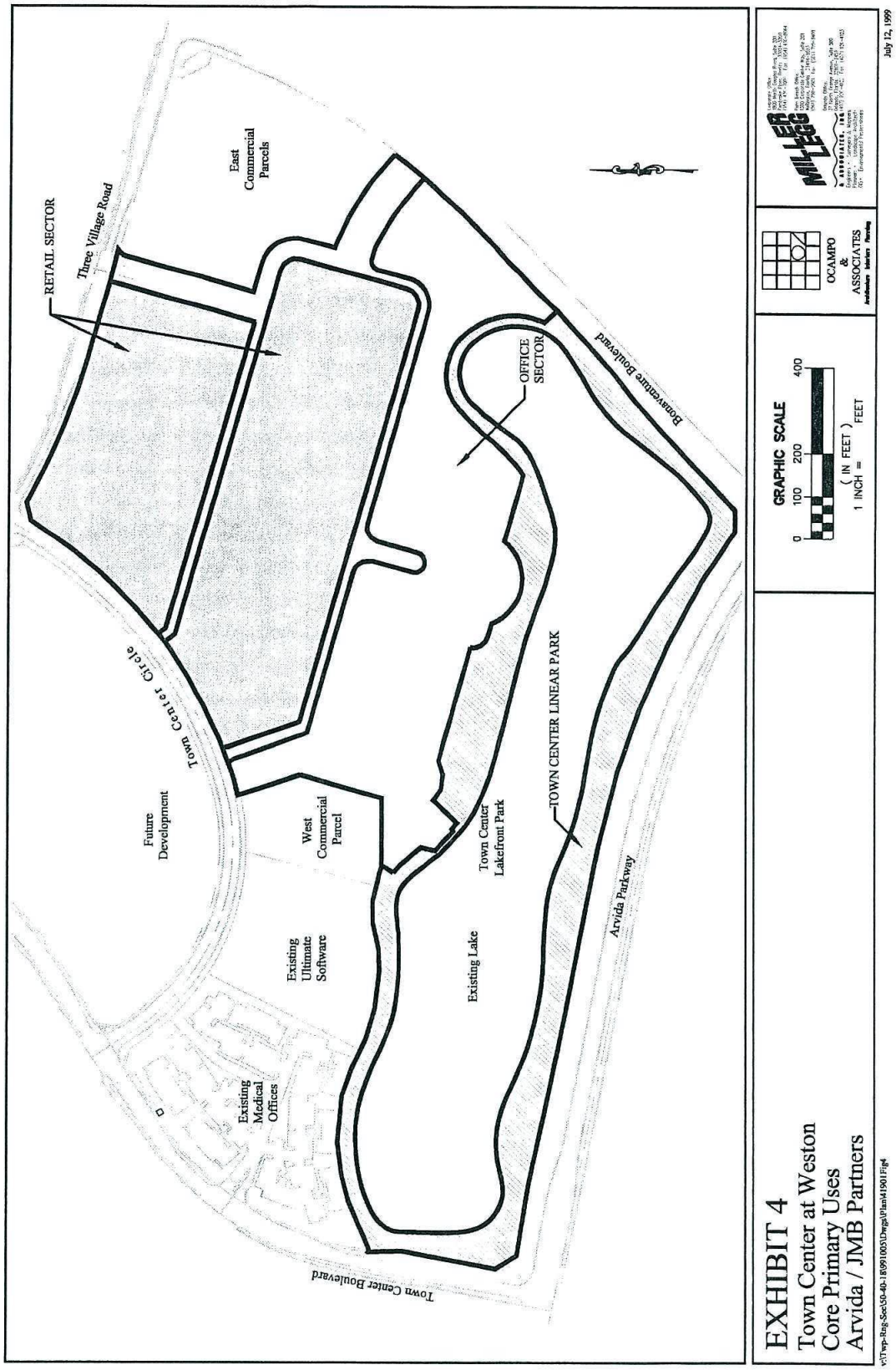

EXHIBIT 4
Town Center at Weston
Core Primary Uses
Arvida / JMB Partners

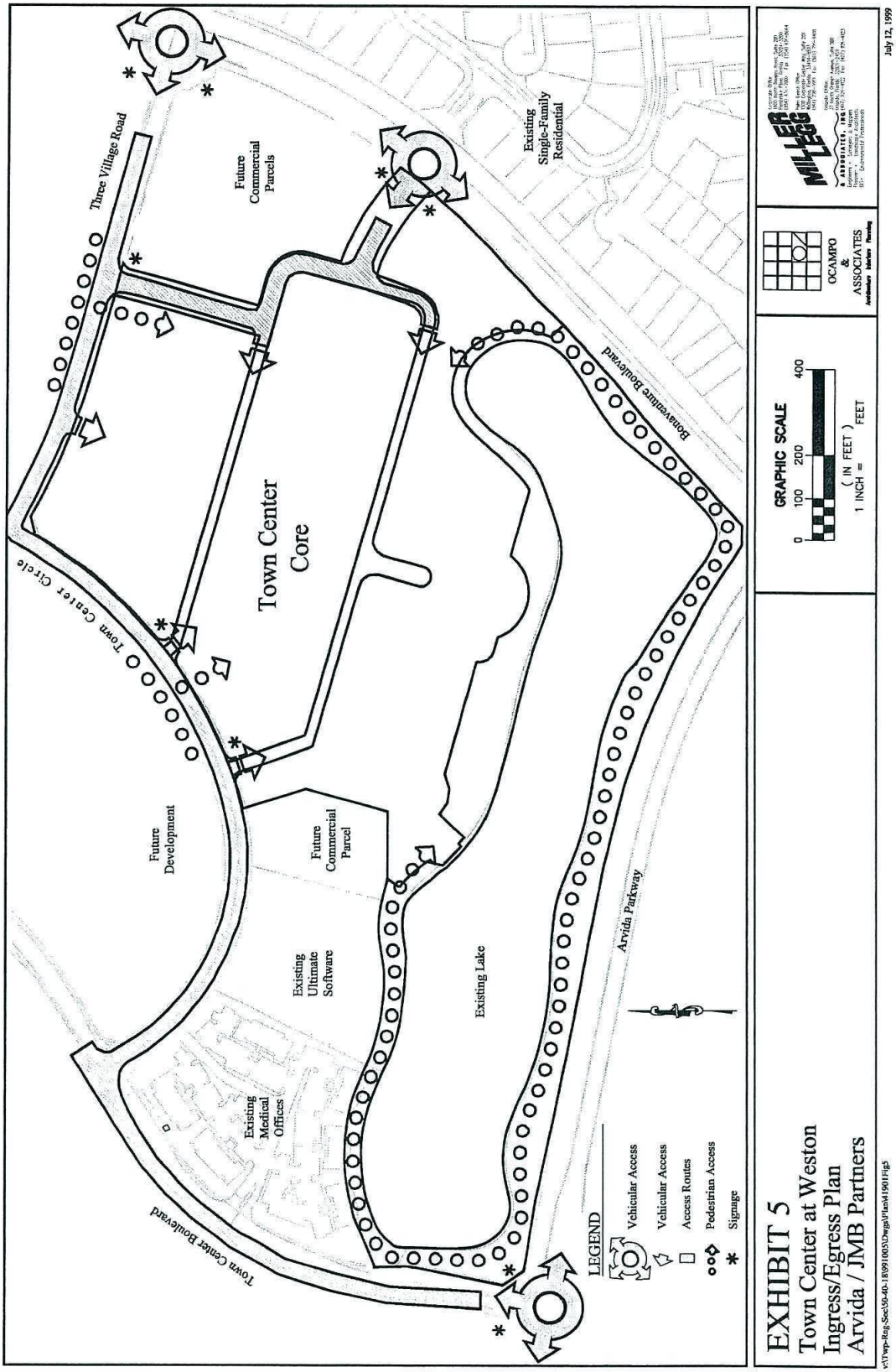

EXHIBIT 5
Town Center at Weston
Ingress/Egress Plan
Arvida / JMB Partners

EXHIBIT 6 TOWN CENTER AT WESTON - SIGNAGE GUIDELINES OUTLINE

DESIGNATION	LOCATION	TYPE	QUANTITY	SIGN SIZE	HEIGHT	MATERIAL	COMMENTS
CORE ENTRY SIGNAGE							
A	Bonaventure Boulevard / Three Village Road	Freestanding w/ planter walls	2	40 square feet	12 feet max.	stucco & metal	freestanding
B	Arvida Parkway / Town Center Boulevard	Freestanding w/ planter walls	2	40 square feet	12 feet max.	stucco & metal	freestanding
C	Three Village Road Entry	Freestanding w/planting beds	1	40 square feet	8 feet max.	stucco & metal	freestanding
D	Town Center Circle Entries	Freestanding w/planting beds	1	40 square feet	8 feet max.	stucco & metal	freestanding
BUILDING SIGNAGE							
A	Non-Retail Buildings	Building Identification	2 per building	18 feet length	24 inches	channel style, color neon back lit	top floor of multi-story building
B	Main Street Pedestrian Parking Access	Exposed Neon	2	12 square feet	24 inches maximum	exposed neon	wall mounted above breezeway
TENANT SIGNAGE							
A	Non-Retail Suite	Suite Identification Sign and Hours of Operation Sign	1 per tenant	16 x 20 inches 6 x 16 inches	8 feet above grade	T.B.D.	adjacent to entry door than 12' high
B	Non-Retail ID	Wall Mounted	T.B.D.	12 feet	6 inches	cast bronze or brass	limited to first floor tenants ,no higher than 12 feet above F.F.
C	Retail Tenant ID	Tenant Identification	T.B.D.	18 feet length	16 inches	back lit channel style or awning	mounted on building face over principal entry
D	Supermarket	Tenant Identification	1	110 square feet	60 inches	T.B.D.	wall mounted on main facade
TRAFFIC							
	Town Center Core & Parcels	Traffic & Street Signs	T.B.D.	T.B.D.	T.B.D.	T.B.D.	As per City of Weston code
TEMPORARY							
	Construction Site	Ground or Wall Mounted	1 per parcel	4 x 8 feet	8 feet max.	Single-sided	Temporary
DIRECTORY SIGNAGE							
A	Building Wall	Wall Mounted	2 per building	48 x 48 inches	8 feet above grade	T.B.D.	
B	Kiosk	Freestanding Kiosk	1 per side	48 x 48 inches	12' overall height	T.B.D.	
DIRECTIONAL SIGNAGE							
	Town Center Core	Post Column Mounted or at Grade	T.B.D.	3 feet wide	5 feet	T.B.D.	
PARCEL ENTRY SIGNAGE							
	Minimum 10 feet from Front & Side Property Lines, Perpendicular to Roadway 5' Setback from Buildings & Parking	Freestanding double sided	1 per street frontage	T.B.D.	6 feet	T.B.D.	within landscaped beds, illuminated by ground spotlights only

V: \twp-Rng-Sec\50-40-18\941901\Dwgs\Landsc\sign-1.123

§124.26 WESTON COMMONS PLANNED EMPLOYMENT CENTER DISTRICT (PECD) GUIDELINES AND STANDARDS.

124.26 (A) ***Introduction and Site Development Concept.***

124.26 (A)(1) Weston Commons, as shown and legally described in Ord. 2007-05, is a 60 +/- acre Planned Employment Center District (PECD) comprising Special Residential (includes 55-and-over communities "Adult" and Special Residential Facilities), and Retail parcels. This constitutes the "Employment Center" element of the Emerald Estates and Park of Commerce Development of Regional Impact (DRI).

124.26 (A)(2) In keeping with the conditions of the DRI and subsequent related Development Orders, this subsection sets out design guidelines for the project, and accompanies the Site Development Plan.

124.26 (A)(3) The DRI specifically addresses the tone of Development for the PECD: "The property shall be developed in such a manner as to assure the physical integration of the retail Uses with the other permitted Uses." The guidelines for achieving this physical integration shall be accomplished by complying with the following design criteria, by way of example and not limitation:

124.26 (A)(3)(a) A unified and well-organized arrangement of Buildings, service areas, parking, pedestrian and Landscaped Common Areas for the maximum comfort and convenience of visitors and occupants. Buildings shall be grouped in relation to parking areas and one another so that after visitors arriving by automobile enter the walkway system, establishments can be visited conveniently with a minimum of internal automobile movements;

124.26 (A)(3)(b) Shared vehicular access, shared parking, unified signage, and Landscaped pedestrian access ways between Buildings;

124.26 (A)(3)(c) Facilities and access routes for retail deliveries, servicing and maintenance located and arranged so as to prevent interference with pedestrian Traffic;

124.26 (A)(3)(d) Architectural and Landscape design elements that will create a harmonious relationship between and amongst the natural site characteristics and the various Building units that may be of a different design style. This will allow for individual expression in design style, while providing harmony through the Use of common design elements;

124.26 (A)(3)(e) The Applicant shall submit a site Development Plan and design guidelines with the rezoning application that shall specify, at a minimum, Setbacks or yards, plot coverage, Height, Landscaping, Perimeter Buffering (which may include fences), Common Areas, drainage, internal circulation and signage. The Applicant shall also submit the Site Development Plan and design guidelines to the Emerald Estates Community Association for review and comment.

124.26 (A)(3)(f) The Site Development Plan and Design Guidelines, as shown in Ord. 2007-05, have been evolved using the above guidelines as the focus.

124.26 (A)(4) Detailed site planning for individual parcels or groups of parcels will be through the City's site plan approval process. The site plan(s) shall be subject to the City Code in effect at the time of site plan review.

124.26 (A)(5) All proposed Uses, paving, parking and roadways will be designed considering the highest and best Use of the land, ease of access and community needs. The plan will integrate all required storm water facilities and Utility/infrastructure systems.

124.26 (A)(6) Critical to the success of Weston Commons is the provision of Independent and Assisted Congregate Living Facilities. The City at present lacks any similar facilities, making this project of even more benefit to the community. Determination of the final layout of the Special Residential sections shall be through the City's site plan approval process.

124.26 (A)(7) Permitted Uses within Parcels B and C, as shown on the Site Development Plan, and north of Emerald Park Circle, shall be limited to those Uses permitted within the Commercial District (C-1).

124.26 (A)(8) The following shall be prohibited within 482 feet of the north property line of Parcel B:

124.26 (A)(8)(a) Restaurants;

124.26 (A)(8)(b) Outdoor speakers, music or intercom systems.

124.26 (A)(9) The following shall be prohibited within 100 feet of the west boundary of Parcel C:

124.26 (A)(9)(a) Outdoor speakers, music or intercom systems;

124.26 (A)(9)(b) Open air, Outdoor Restaurant seating.

124.26 (A)(10) With the exception of a grocery store which may contain up to 55,000 gross square feet, no individual retail Use shall have a floor area in excess of 30,000 gross square feet, unless approved by the City Commission at the time of site plan approval for such retail Use.

124.26 (A)(11) Gas station use shall not be permitted within the Employment Center.

124.26 (A)(12) Retail delivery times will be addressed at the time of site plan approval.

124.26 (A)(13) Subsequent sections of this document set out detailed design guidelines for Development.

124.26 (B) ***Development standards***. To provide for a coordinated image within Weston Commons, standards for Weston Commons and individual Uses have been established. Adherence to these standards will provide a high level of Development quality that will ensure the perpetuation of Weston Commons standards for all future Development. The following items are to be specifically addressed:

124.26 (B)(1) ***Setback requirements.***

124.26 (B)(1)(a) Building Setback from the property line on Weston Road shall be as follows:

124.26 (B)(1)(a)(1)	Special Residential	75 feet
124.26 (B)(1)(a)(2)	Retail	75 feet

124.26 (B)(1)(b) Building Setback from the property line on Emerald Park Circle shall be as follows:

124.26 (B)(1)(b)(1)	Special Residential	40 feet
124.26 (B)(1)(b)(2)	Retail	50 feet

124.26 (B)(1)(c) Building Setback from the property line on south property line abutting the South New River (C-11) Canal shall be as follows:

124.26 (B)(1)(c)(1)	Special Residential	N/A
124.26 (B)(1)(c)(2)	Retail	28 feet

124.26 (B)(1)(d) Building Setback from the property line on the west property line shall be as follows:

124.26 (B)(1)(d)(1)	Special Residential	40 feet
124.26 (B)(1)(d)(2)	Retail	75 feet

124.26 (B)(1)(e) Building Setback from the property line on the north property line shall be as follows:

124.26 (B)(1)(e)(1)	Special Residential	40 feet
124.26 (B)(1)(e)(2)	Retail	100 feet

124.26 (B)(1)(f) A separation of 75 feet shall be maintained between Buildings in the Special Residential Parcels A-1 and A-2. Special Residential Parcel A-2 shall provide a ten-foot Setback from the west property line within Parcel A-2.

124.26 (B)(1)(g) Buildings shall be set back a minimum of ten feet from internal driveways, with the exception of service areas.

124.26 (B)(1)(h) Any Building in excess of the maximum Height shown in subsection (B)(2)(f) of these guidelines, as measured from the first-floor finished grade of the Building to the highest visible point (with the exception of Architectural Detail), shall be set back an additional one foot for every one foot, or fraction thereof in additional Height; provided, however, this requirement shall be limited to the north and south Setbacks within Special Residential Parcel A-2 and shall not apply to the east and west Setbacks within Special Residential Parcel A-2.

124.26 (B)(1)(i) Building separations between individual Buildings shall be as follows:

124.26 (B)(1)(i)(1) Special Residential 10 feet minimum

124.26 (B)(1)(i)(2) Retail 10 feet minimum

124.26 (B)(2) ***Buffer requirements.***

124.26 (B)(2)(a) Perimeter Buffer areas within the boundary of Weston Commons shall be as follows and depicted in the diagrams below:

124.26 (B)(2)(a)(1) A minimum of 25 feet adjacent to residential Uses.

124.26 (B)(2)(a)(2) A minimum of 30 feet on the west side of the Retail parcel ('C').

124.26 (B)(2)(a)(3) A minimum of 40 feet along Weston Road and Emerald Park Circle; provided that an easement in favor of Broward County shall be permitted within the buffer along Weston Road. In the event Weston Road is ever widened, the required buffer may be reduced by no more than 6.5% as depicted on the Weston Commons Plat.

124.26 (B)(2)(a)(4) A minimum of 20 feet on the south property line adjacent to the South New River (C-11) Canal Right-of Way.

124.26 (B)(2)(b) Required buffers along Weston Road and Emerald Park Circle shall have continuous earth berms with a minimum Height (measured from the crown of the adjacent Street) of four feet, except at driveway openings. Berms shall have a maximum slope of one vertical to three horizontal.

124.26 (B)(2)(c) Continuous screening shall be provided except at driveways, and shall consist of berms and plantings, including a continuous Hedge, with shade Trees a maximum of 35 feet on center; where feasible, Trees shall be planted with triangular spacing with separations of 25 feet on center. Ficus Trees are excluded from Right-Of-Way buffers due to availability of other Tree species to provide a filtered view of Weston Commons architecture.

124.26 (B)(2)(d) A ten-foot-wide Landscape buffer shall be provided between the Special Residential Parcel A-2 and the Retail Parcel B, with the exception of service area and fire access points. Terraces and balconies may encroach into the service area. A fence six feet in Height consistent with the design of the project on the Special Residential Parcels as approved by the City Commission shall be installed in the Landscape buffer to separate the Special Residential Parcels and the Retail Parcel B.

124.26 (B)(2)(e) A ten-foot-wide buffer shall be provided along the west property line between Special Residential Parcel A-1 and Special Residential Parcel A-2.

124.26 (B)(2)(f) The Landscape buffer on the north corner between Special Residential Parcel A-1 and Special Residential Parcel A-2 shall be a minimum of 30 feet overall between the edge of the parking and access road with 12 feet on Special Residential Parcel A-1 and 18 feet (consisting of a ten-foot terminal Landscape island and eight-foot Landscape buffer) on Special Residential Parcel A-2 with the exception of the two vehicular entry lanes, one hammerhead maneuvering area, one exit lane, and the one fire access exit lane.

124.26 (B)(2)(g) In order to establish variation in the plantings, clusters of large palm species (Royals, Bismarks, Phoenix) with minimum seven feet of wood can be used at regular intervals to replace plantings.

124.26 (B)(2)(h) The Perimeter Buffers shall be installed pursuant to the following:

124.26 (B)(2)(h)(1) Prior to the issuance of a Certificate Of Occupancy for any Use within Parcel A-1, A-2, B, or C, install all the buffers along the boundary of these Parcels, with the exception of Construction access points which buffer areas shall be installed prior to issuance of the last Certificate Of Occupancy within these Parcels.

124.26 (B)(2)(h)(2) Prior to the issuance of a Certificate Of Occupancy within Parcel C, install all the buffers along the boundary of this Parcel, with the exception of Construction access points which buffer areas shall be installed prior to issuance of the last Certificate Of Occupancy within this Parcel.

124.26 (B)(2)(i) Within the Landscape buffer along the western perimeter of Parcel C, a shade Tree shall be installed in lieu of the center sabal palm within each grouping of sabal palms.

124.26 (B)(3) ***Site coverage and greenspace.***

124.26 (B)(3)(a) Site Coverage. Maximum site coverage shall be as follows:

PARCEL	USE	SITE AREA	BUILDING AREA	COVERAGE	HEIGHT
Parcel A-1	Special Residential	23.89 Acres	382 Adult Units	30%	See Design Guidelines
Parcel A-2	Special Residential	7.55 Acres	326 Adult units	35%	See Design Guidelines
Parcel B	Retail	8.46 Acres	50,000 square feet ***	35%	See Design Guidelines
Parcel C	Retail	19.82 Acres	175,000 square feet	30%	See Design Guidelines
Total		60 +/- Acres			

124.26 (B)(3)(b) Greenspace / Pervious requirements.

124.26 (B)(3)(b)(1) Special Residential Parcels 30% of Gross Parcel Area*

124.26 (B)(3)(b)(2) Retail Parcels 30% of Gross Parcel Area*

* Phased Developments within gross parcel areas may have individual site plans approved with a minimum of 20% greenspace.

124.26 (B)(3)(c) Building coverage may be maximized, provided that Utility and maintenance easements and sufficient parking can be provided within these limits, and established Setbacks and buffers are adhered to.

124.26 (B)(3)(d) Building coverage and greenspace/Pervious Area shall be as governed by the Site Development Plan and these design guidelines.

124.26 (B)(4) ***Entrance drives and curb cuts.***

124.26 (B)(4)(a) Parcel entries shall provide for Landscaped areas on either side of the driveway. A change of pavement at the driveway consistent with materials used within Weston Commons shall be provided.

124.26 (B)(4)(b) All undivided driveways shall have a width of 24 feet, except that all undivided driveways in the Special Residential Parcels A-1 and A-2 may have a width of 22 feet provided that 90° curves shall have a width of 24 feet. Divided driveways with medians shall have individual lanes of no more than 16 feet in width. Landscaped driveway medians shall be a minimum of eight feet in width and planted to the end in compliance with applicable codes.

124.26 (B)(5) ***Sidewalks/pedestrian linkage.***

124.26 (B)(5)(a) A Sidewalk and pedestrian linkage system shall be designed to connect parking areas with various land Uses in Weston Commons, in a manner that encourages pedestrian circulation between Buildings, and thus reducing the use of vehicles. Pedestrian walks shall be constructed from brick pavers or other decorative material. Pedestrian walks for Special Residential Parcels A-1 and A-2 shall be constructed from brick pavers, concrete, or other decorative materials with a brushed finish to be determined prior to final site plan approval.

124.26 (B)(5)(b) In order to encourage the pedestrian use, Sidewalks shall be a minimum of five feet wide. Sidewalks will conform in color, finish and jointing to be established during Site Plan Review. Consistency throughout the Project shall be provided by the following criteria:

124.26 (B)(5)(b)(1)	Surface texture/finish	ASTM C-33 and C-150
124.26 (B)(5)(b)(2)	Color	ASTM C-936-82
124.26 (B)(5)(b)(3)	Jointing	Butt tight, sanded and vibrated

124.26 (B)(5)(c) Two-percent maximum cross slope shall be used on Sidewalks.

124.26 (B)(6) ***Building Height***.

124.26 (B)(6)(a) Building Heights shall comply with the following maximums. Heights shall be defined as the highest visible point on the Building (with the exception of non-structural architectural detail):

124.26 (B)(6)(a)(1) Special Residential:

124.26 (B)(6)(a)(1)(i) Two stories, 30 feet max. Height at Setback line.

124.26 (B)(6)(a)(1)(ii) Four stories, 60 feet max. Height, with additional Setback. [See Setback requirements in subsection (B)(2)(a).]

124.26 (B)(6)(a)(2) Retail: One Story, 38 feet max. Height, unless greater Height and/or multi-Story is approved by the City Commission at the time of site plan approval.

124.26 (B)(6)(b) Non-structural architectural detailing may extend above the maximum roof Heights stated above.

124.26 (B)(7) ***Roadways/driveways.***

124.26 (B)(7)(a) Driveway spacing will conform to the City's current land Development regulations with the possible exception of delivery vehicle areas, which will be segregated from other vehicle circulation when feasible. Gaining access to such loading areas may require special design considerations that are not specifically addressed in the

City Code, however any special design consideration shall be made in the City's sole discretion at the time of site plan approval.

124.26 (B)(7)(b) At the north access road, the driveway area shall conform to the cross-section as shown below. Continuous screening of the residential areas north of the north property shall be provided by plantings and, as approved by the Opal Creek Homeowners Association, a fence shall be installed on the Weston Commons side of the common property line of Opal Creek and Parcels A-1, A-2, and B of the Development.

124.26 (B)(7)(c) Planned project access locations are shown below. Detailed design and locations shall be determined through the City's site plan approval process.

124.26 (B)(8) ***Parking.***

124.26 (B)(8)(a) Parking areas shall be sufficient to serve each Use.

124.26 (B)(8)(b) No parking area or driveway shall be less than five feet from the front or side of any Building, excluding loading and service areas. For areas less than ten feet in width, layered Landscape material shall be used, to transition from the vertical Building face to the driveway.

124.26 (B)(8)(c) Cross slopes in parking area shall be 1% minimum and 4% maximum.

124.26 (B)(8)(d) All parcel parking lots, drives and vehicular service areas are to be curbed, internally drained and paved.

124.26 (B)(8)(e) Parking in the Special Residential parcels shall be for the exclusive use of residents and visitors. All valet parking within Special Residential Parcel A-2 shall be continuous.

124.26 (B)(8)(f) The required number of parking spaces for retail Use shall be in accordance with the City Code. The required number of parking spaces for the Special Residential Use shall be in accordance with the City Code provided, however, that simultaneous with the approval of a site plan for a Special Residential Use, the City Commission may approve an alternative parking standard applicable to said site plan if the City Commission determines such an alternative standard is justified in consideration of the unique parking needs of Adult communities and Special Residential facilities in general, the parking requirements of other Adult communities and Special Residential facilities owned by the Applicant, the transit and other On-Site services to be provided by the Adult community and Special Residential facilities, and such other supporting data as may be deemed appropriate by the City Commission. In the event the City Commission elects to approve an alternative parking standard, no variance shall be required. The Special Residential Use (Parcels A-1 and A-2) and Retail Use (Parcels B and C) shall meet these parking requirements without regard to the spaces within the other parcels or shared parking offsets.

124.26 (B)(8)(g) Parking Lot layouts shall conform to the following dimensions:

124.26 (B)(8)(g)(1) Parking Aisles shall, whenever possible, be oriented perpendicular to the front of the Buildings. This shall apply to all parcels except Special Residential. When not located perpendicular to Buildings, islands with Sidewalks shall be located in parking rows for pedestrian cross Traffic.

124.26 (B)(8)(g)(2) Ninety-degree (90) parking is encouraged with a minimum Stall size of nine feet by 18 feet.

124.26 (B)(8)(g)(3) Handicap parking spaces shall be a minimum of 12 feet by 18 feet, with a five-feet-wide alighting aisle per Florida Accessibility Code and ADA regulations.

124.26 (B)(8)(g)(4) Two-way parking area driveways and cross aisles must have a minimum width of 24 feet.

124.26 (B)(8)(h) Parking Lot layouts shall provide Landscaping in accordance with the following:

124.26 (B)(8)(h)(1) Parking areas shall include a Landscape area at the perimeter. These Landscape areas may include Sidewalks, pavers, plantings and grass in order to encourage pedestrian circulation.

124.26 (B)(8)(h)(2) Internal islands shall be a minimum of 11 feet wide by 17 feet long, provided for every ten parking stalls.

124.26 (B)(8)(h)(3) Terminal islands, 11 feet wide, are to be provided for each parking row.

124.26 (B)(8)(h)(4) Terminal islands with walkways shall be 15 feet wide with a minimum of ten-foot-wide planting area.

124.26 (B)(8)(h)(5) Interior islands with walkways shall be 16 feet wide with a minimum ten-foot-wide planting area.

124.26 (B)(8)(i) In order to encourage pedestrian and vehicular safety, posted speed limits within Weston Commons shall be 15 mph.

124.26 (B)(9) ***Exterior Lighting.***

124.26 (B)(9)(a) Site lighting.

124.26 (B)(9)(a)(1) Site lighting is intended to be subtle, and to establish a consistency and hierarchy of lighting types. Exterior lights shall be used to accent entrances and special features. Light intensity shall be no greater than required for automobile and pedestrian safety. To minimize the number of lighting standards, wherever possible overflow light from inside the Building shall be used. The lighting source of fixtures and flood lighting shall be

screened from view, if it is of such intensity as to be deemed a source of glare. Offsite spillage shall comply with the City Code.

124.26 (B)(9)(a)(2) Lighting shall be designed to reflect the architectural style of the Building, be appropriate in scale, light quality, coloration, and light level for the intended purpose it is to serve. Lighting for parking shall be compatible with the lighting present on adjacent Streets and peripheral parcels.

124.26 (B)(9)(b) Location and type.

124.26 (B)(9)(b)(1) All lighting for parking within Weston Commons shall be metal halide with a maximum 35-foot pole Height. Light poles within 250 feet of residentially zoned properties shall be limited to a Height of 24 feet. Pole and luminar shall be shoebox style. Light levels shall be maintained at a minimum of one Footcandle and a maximum uniformity ratio of 12:1. Offsite spillage shall comply with the City Code.

124.26 (B)(9)(b)(2) Pedestrian walkway and internal drive lighting will be provided by freestanding pole with globe-like luminar with refractors. The Height of these fixtures will be no greater than 24 feet so as to promote a pedestrian scale.

124.26 (B)(9)(b)(3) Low level Street lighting for the north driveway shall be of the same Height as that existing on Emerald Park Circle.

124.26 (B)(9)(c) Sign lighting shall be required for all signage, except for the Directional Signs. Sidewalk, roadway and parking area lighting is mandatory.

124.26 (B)(9)(d) Flood lighting fixtures on Buildings are only allowed in service areas. Flood lighting of any Building is prohibited. However, up or down lighting of specific architectural elements of a Building shall be permitted. Balcony and soffit down lighting is permitted.

124.26 (B)(9)(e) Flood lighting may be used to illuminate key architectural and identification elements and will be recessed at ground level.

124.26 (B)(9)(f) Fixture and lamp standards. To create a uniformity of look, the manufacturer's and model numbers of site lighting fixtures to be used for the Streets will be furnished to parcel developers upon request.

124.26 (B)(9)(g) Accent lighting. To enhance on site art, architecture and Landscaping, accent lighting will be used within Weston Commons. Accent lighting will include up-lighting, moonlighting, ribbon-lighting and spotlighting and will be recessed at ground level.

124.26 (B)(10) ***Signage and graphics.***

124.26 (B)(10)(a) Signage and graphics within this PECD shall be as follows:

124.26 (B)(10)(a)(1) Weston Commons signage will conform in style and materials, and the use of uniform colors and font types will be required. Location of signage will be a major element in establishing the design theme continuity within Weston Commons. All signage shall conform to all applicable clear sight and clear recovery zone requirements.

124.26 (B)(10)(a)(2) Details of signage including location, type, size, illumination and quantity have been developed in a series of graphic depictions as shown below, which are consistent with the Weston Commons P.E.C.D. Guidelines as previously approved. Most of the Signs in Weston Commons shall be consistent with the signage regulations of the City Code, except for a few deviations as described herein. Permit drawings of final graphics, dimensioning and engineering may create minor discrepancies with the depictions shown below; however the design intent, size, proportion and consistency with the Weston Commons aesthetic theme shall remain constant.

124.26 (B)(10)(a)(3) For quick reference, the Sign Performance table and the Master Sign Location Plan is found at the end of subsection (B)(2)(j).

124.26 (B)(10)(b) Existing identity feature signage - Sign 'A.'

124.26 (B)(10)(b)(1) The existing identity feature signage is to be modified for the P.E.C.D.'s business and facilities. Existing Wall Signs at the intersection of Weston Road and Emerald Park Circle will be rehabilitated and retrofitted with architectural detailing consistent with Weston Commons aesthetic. The existing Sign wall panel is to be replaced. The replacement will be a primary identification Sign constructed at 45 degrees to the roadway and be located totally within the existing feature Sign Structure. Block lettering will be 24 inches tall, solid polished metal, Times New Roman font, on metal picket fencing, atop a masonry base. Modifications to the entry signage shall not exceed overall Height of existing Sign panel, will retain the existing flanking walls, will retain existing large date palms and replace Shrubs and Ground Covers surrounding the entry feature as proposed on the retail Landscape plans. The feature lighting will be replaced and supplemented with both ground mounted and in-ground lights that emit white light, concealed in the planting beds.

124.26 (B)(10)(b)(2) All signage Landscaping shall be connected to Landscape beds on the parcel. In-ground lighting that emits white light will illuminate the parcel Landscape. The parcel signage shall be set no less than ten feet from the front and side property lines and shall require five-foot Setbacks on all sides from Buildings and/or parking areas.

124.26 (B)(10)(c) Emerald Estates, Emerald Park Circle - Sign 'B.' The Emerald Estates identification Sign is located in the Landscape buffer at the southwest corner of "The Palace" site, adjacent to Emerald Park Circle and Emerald Estates Plat, Parcel B. One Sign only shall be positioned to be viewed on a direct line of sight from the westbound lane of Emerald Park Circle, unobstructed by buffer Landscaping. Design will be consistent with Monument Sign criteria, incorporating Weston Commons aesthetics. The face area of the Sign will not exceed 32 square feet and the Sign Height will not exceed eight feet from the

crown of road. The Sign will have ground lights that emit white light concealed in the planting beds located at the base of the Sign.

124.26 (B)(10)(d) Retail entry signage. An entry signage feature is to be located along Weston Road and Emerald Park Circle.

124.26 (B)(10)(d)(1) Retail entry - Sign 'C.' The entry Sign for Weston Commons at Weston Road will consist of a freestanding masonry and stucco architectural Monument Sign, one double-faced Sign at the parcel entry. The Sign will contain the name of the project and informational text and shall establish the design theme for all signage located within Weston Commons. The Signage Face Area will be limited to 36 square feet with a maximum overall Height of this entry Sign not to exceed six feet in Height from adjacent finished grade, 15-foot Setback from R.O.W. and outside required clear sight distance triangles. The entry Sign will have a required background Landscape of two gray wood palms and three accent Trees or palms. A minimum of 500 square feet of Landscape Shrubs and groundcovers not exceeding 30 inches in Height must surround the entry Signs. The entry Sign will have ground lights that emit white light concealed in the planting beds located at the base of the entry Sign. Flanking Landscapes of a minimum of three large palms and five accent Trees each side are required; minimum Heights found in subsection (B)(2)(m), Landscape and Irrigation. Accent lights or Tree up-lights must be "in-ground" type that emit white light. In addition, the Landscape may be further expanded planter walls with accent Landscaping may be located at the corners of the intersections.

124.26 (B)(10)(e) Monument signage.

124.26 (B)(10)(e)(1) Monument Signs are to be located along Weston Road within ten feet of the Right-Of-Way line.

124.26 (B)(10)(e)(2) Freestanding Outparcel Buildings - Sign 'D.' The Monument Signs for Weston Commons will consist of freestanding masonry and stucco architectural Monument Signs, one double-faced Sign for each freestanding commercial Outparcel Building. The Signage Face will be limited to 36 square feet, with a maximum overall Height not to exceed six feet in Height from adjacent finished grade. These Signs shall be placed no closer than ten feet from the Weston Road Right-Of-Way and will be inside the Landscape buffer of Weston Commons.

124.26 (B)(10)(f) Directory signage for retail - Sign 'E.' Directory Monument signage will be ground mounted adjacent to an interior drive aisle or access way. Directory Sign Face Area shall be limited to 24 square feet and up to six anchor Tenants and/or out-parcels and indicate general direction to destination. The Directory Sign shall be no more that five feet in Height from adjacent finished grade. Directory signage will be designed with detailing consistent with Weston Commons aesthetic and be in a Landscape bed surrounding the Sign, minimum five-foot width and/or adjacent Landscape. The Monument Sign will have ground lights that emit white light concealed in the planting beds located at the base of the entry Sign.

124.26 (B)(10)(g) The Palace.

124.26 (B)(10)(g)(1) The Palace entry Signs/feature - Sign 'F.' The entry Signs/feature is a unique composition of Sign walls and metal picket fencing and security gates submitted in a separate site plan application. The schematic graphics and dimensioning as shown below, is consistent with the architectural styling of the Special Residential area and detailing also consistent with the Weston Commons aesthetic. The Sign Area shall not exceed 32 square feet and have a maximum Height of six feet from the adjacent crown of the road. Permit drawings of final graphics, dimensioning and engineering may create minor discrepancies; however the design intent, size, proportion and consistency with the Weston Commons aesthetic theme shall remain constant.

124.26 (B)(10)(g)(2) The Palace boundary marker - Sign 'G.' Located off the Arterial Roadway, The Palace requires a Freestanding marker Sign on the north boundary to direct services and newcomers to their main entrance and sharing the private access way with future commercial office Development. The marker will consist of one double-sided Monument Sign with The Palace identified, not exceeding three-and-a-half feet in Height, six-and-a-half feet in length, 32 square feet in face area. The boundary marker shall conform to all applicable clear-sight and clear-recovery zone requirements. Modification to the existing boundary marker shall be permitted to allow additional text, provided the total face area does not exceed 32 square feet.

124.26 (B)(10)(g)(3) The Palace at Weston Senior Living entry Sign/feature - Sign 'I.' Located off Emerald Estate Drive, The Palace requires an identifying Sign to alert residents and visitors to the entrance drive. The style and proportion of the Sign shall be consistent with the styling of the Sign for the existing Special Residential facility on Tract A-1. The Sign Face shall not exceed 32 square feet and the design of the Sign shall be submitted and approved by the City Commission.

124.26 (B)(10)(g)(4) At the time of Site Plan approval for the Special Residential Facility, the City Commission may approve additional Sign text on Sign 'A' on the north side of Emerald Park Circle for "The Palace" provided the overall Sign Face area shall not exceed 50 square feet.

124.26 (B)(10)(h) Wall-mounted Building signage (refer to architectural elevation drawings as shown below)

124.26 (B)(10)(h)(1) All Tenants will be permitted to have a primary ID Sign on the Building elevation above the principal entry/courtyard consisting of the company name and corporate Logo, consistent with subsection (B)(2)(j)(8)(B–G), as follow.

124.26 (B)(10)(h)(2) Retail "in-line" Tenant identification signage shall each be permitted one Sign located above the principal entry to the Tenant space, on the Building entrance feature, entrance panel or within a banded signage area. Retail names, shall be reverse channel, metal letters in one color that conforms to the Sign performance table for Weston Commons. Logos and insignias shall not exceed 10% Sign Area. Reverse channel lighted letters shall emit white light.

124.26 (B)(10)(h)(3) Retail 'D' & 'E' retail Buildings identification signage are permitted not more than two Wall Signs. Freestanding Buildings include Restaurants and

banks. Primary Sign shall be located: (i) within a signage banded area above the principal entry to the Tenant space and (ii) secondary Sign of the same configuration may be mounted on a Building elevation below the Parapet efface line of the Building facing an adjacent roadway. All Building wall signage shall not exceed 50% of the store Frontage. The maximum face area of each Sign for Outparcels shall not exceed 40 square feet. Logos and insignias shall not exceed 10% of Sign Area. Retail Sign lettering shall be reverse channel that emit white light and conforms to the Sign performance table for Weston Commons. No Sign shall extend above the roofline or Parapet efface.

124.26 (B)(10)(h)(4) Freestanding (Outparcel) Buildings including banks and Restaurants shall be allowed one wall-mounted Sign not to exceed 40 square feet of Sign Area and shall be located at the top floor level of a single or multi-story Building, on Building elevation or within a signage banded area above the principal entry to the freestanding Building.

124.26 (B)(10)(h)(5) Tenant door Signs shall be permitted which identify the business or activity by name or symbol. Vinyl die/laser cut postal address numbers four inches in Height, in white, shall be provided for each Tenant space. These shall be centered on entry door with bottom edge five feet from the threshold of the door.

124.26 (B)(10)(h)(6) Wall-mounted signage for corporate licensing, branding and equity ownership is prohibited.

124.26 (B)(10)(h)(7) Handmade artistic Signs are prohibited.

124.26 (B)(10)(i) Traffic signage. Traffic Signs and Street Signs both within Weston Commons as well as outlying parcels shall conform to design, number and approved location requirements as per the City Code. All information shall use international symbols and will be designed to complement all other Weston Commons signage. Traffic signage may be fitted with custom theme detailing consistent with a Weston Commons aesthetic if the developer so chooses.

124.26 (B)(10)(j) Directional signage. Directional signage for business Tenants with curb-side service shall be no more than three feet in Height from adjacent finished grade, maximum of three square feet of Sign Face area and limited to one Sign per Building. Ground-mounted Directional Signs will have architectural detailing consistent with the Weston Commons aesthetic if the developer so chooses.

124.26 (B)(10)(k) Platted Tracts B-1 and B-2 Non-Retail signage.

124.26 (B)(10)(k)(1) Non-retail Buildings and Special Residential identification signage shall be located on the Building entrance feature, entrance panel or within a signage banded area above the principal entry to the property. Names, Logos and insignias shall be reverse-channel style that emit white light; of the same font type and color coating as the Weston Commons main identifier. No Sign shall extend above the roof eave or Parapet line. All Building wall signage shall not exceed 12 inches in Height, or 12 feet in length with a total coverage area less than 12 square feet. All lettering shall be reverse channel, metal letters in one color that conforms to the signage performance standards for

Weston Commons. Logos, trademarks and insignias shall not exceed 10% of the Sign Area. Reverse channel lighted letters shall emit white light. Located adjacent to the principal entry door, a suite Directory Sign shall not exceed 16 inches by 20 inches.

124.26 (B)(10)(k)(2) If the non-retail Building has more than one Tenant, its parcel Sign may display the name of the Building or the names of the Tenants occupying 30% or greater of the Building. Tenant names shall all be in the same style and size of letters as approved. All information shall be contained within the approved Sign Face area.

124.26 (B)(10)(k)(3) Non-retail Tenant identification Signs shall not exceed six inches by 16 inches indicating the hours of operation and phone number and are limited to one per Tenant.

124.26 (B)(10)(k)(4) Non-retail Street signage shall conform to design, number and approved location requirements as per the City Code. It shall not exceed six inches in Height, or two feet in length. All Street signage shall conform to design, number and approved location requirements as per the City Code. All information shall use international symbols and will be designed to complement all other Weston Commons signage. Traffic signage may be fitted with custom theme detailing consistent with a Weston Commons aesthetic if the developer so chooses.

124.26 (B)(10)(l) Platted Tract B-1 Retail signage.

124.26 (B)(10(l)(1) Freestanding (Outparcel) Buildings including banks, Restaurants and drug stores shall be allowed one wall-mounted Sign not to exceed 40 square feet of Sign Area and shall be located at the top floor level of a single or multi-story Building, on Building elevation or within a signage banded area near the principal entry of the front door. Each Building shall be allowed one Monument Sign and shall be consistent with Sign 'D of the Sign Performance Table for Weston Commons.

124.26 (B)(10)(l)(2) Retail "in-line" or multi-Tenant Building identification signage shall be permitted one Sign located above the principal entry to the Tenant space, on the Building entrance feature, entrance panel or within a banded signage area. Retail names shall be reverse channel, metal letters in one color that conforms to the Sign performance table for Weston Commons. Logos and insignias shall not exceed 10% of the Sign Area.

124.26 (B)(10(l)(3) Platted Tract B-2 signage shall be determined at submittal to the City of the first site plan application for that particular Development.

124.26 (B)(10)(m) Additional landmarks.

124.26 (B)(10)(m)(1) If proposed, additional landmark architectural elements, such as a bell tower, beacon, waterfalls or pergola, attached to, but not displaying signage, are permitted at a single location having greater than 300 feet of Frontage on Weston Road north and south of Emerald Park Circle; not exceeding 65 feet Height from crown of road,

not more than 30 feet in length and width, and 25 feet Setback from R.O.W. Such elements must be approved by the City Commission under separate permit.

124.26 (B)(10)(m)(2) All ground-mounted Sign Heights are calculated from the adjacent finished grade. All Sign Monument reverse channel lettering, and ground lighting, and "in-ground" Landscape lighting shall emit white light.

WESTON COMMONS SIGN PERFORMANCE TABLE

SIGNS	NUMBER	FACE AREA	SIGN HEIGHT	FONT STYLE	TYPE/ COLOR	ILLUMINATION
'A' Entry Feature	Existing Structures to remain - 1 per corner	Single face Max. 50 sq. ft.	Match existing Structure	Times New Roman bold	Solid metal, polished brass or bronze	Ground-mounted white and in-ground white
'B' Emerald Estates	1 only	Single face Max. 32 sq. ft. Max. 18 in. Letters	Max. 8 ft.	Times New Roman bold	Solid metal, polished brass or bronze	Ground-mounted white and in-ground white
'C' Retail Monument	1 only	Max. 36 sq. Ft.	Max. 6 ft.	Times New Roman bold	Reverse channel, coated black or anodized bronze	Reverse channel white and ground-mounted white
'D' Out Parcel Monuments	1 per out parcel	Max. 36 sq. ft.	Max. 6 ft.	Times New Roman bold	Reverse channel, coated black or anodized bronze	Reverse channel white and ground mounted white
'E' Directory	1 per Building	Max. 18 sq. ft.	Max. 3 ft.	Times New Roman bold	Reverse channel, coated black or anodized bronze	Ground-mounted white
'F' Palace entry	2 Sign walls per Street front	Single face Max. 32 sq.ft.	Max. 8 ft.	Stylized Times Roman	Banded area, w/stylized font, reverse channel	Ground-mounted white

SIGNS	NUMBER	FACE AREA	SIGN HEIGHT	FONT STYLE	TYPE/ COLOR	ILLUMINATION
'G' Palace and Commerce Svc	1 only	Double-sided Max. 5 sq.ft. per	Max. 4 ft.	Stylized Times Roman	Banded area, w/stylized font, reverse channel	Ground- mounted white and in-ground white
'H' City bunker Sign location	N.A.	N.A.	N.A.	N.A.	N.A.	N.A.
'I' Palace senior living entry	1 only	Max. 32 sq. ft.	Max. 8 ft.	Stylized Times Roman	Banded area, w/stylized font, reverse channel	Ground- mounted white
Retail in-line Wall-Mounted	1 each Tenant	50% store front not exceed 20 l.f. Max. 18 in. Letters Logo 10% Sign max	Above principal entry, not above roof line	Times New Roman Bold	Reverse channel, coated black or anodized bronze	Reverse channel white
Outparcel Retail Wall Mounted	1 each Tenant	Max. 40 sq. ft. Logo 10% Sign max	N.A.	Times New Roman bold	Reverse channel, coated black or anodized bronze	Reverse channel white
Retail D & E Wall-Mounted	1 interior VUA, primary, 1 rear secondary	50% store front not exceed 20 L.F.Max. 18 in. Letters	N.A.	Times New Roman bold	Reverse channel, coated black or anodized bronze	Reverse channel white

124.26 (B)(10)(m)(2)(i) All loading spaces shall have a minimum 14-foot vertical clearance.

124.26 (B)(10)(m)(2)(ii) All loading spaces shall conform to the City Code regarding size, location and quantity.

124.26 (B)(10)(m)(2)(iii) Loading areas shall be screened from Streets and Building entrances and shall be designed as an integral part of the Building architecture.

124.26 (B)(10)(m)(2)(iv) The maneuvering of trucks and trailers shall be confined insofar as possible to the rear parking areas of a parcel.

124.26 (B)(10)(m)(2)(v) No articles, goods, materials, fixed machinery or equipment, vehicles, trash, Animals or similar items shall be stored or kept in the open or exposed to view from adjacent parcels, Streets and Sidewalks.

124.26 (B)(10)(m)(2)(vi) Vehicles shall be parked in approved parking areas only. No vehicles are to be stored for more than 24 hours.

124.26 (B)(10)(m)(2)(vii) Loading, service and trash collection can be carried out in shared locations. This shared Use will provide additional space for buffering and Landscape areas.

124.26 (B)(10)(m)(2)(viii) Solid waste facilities for Restaurants shall be enclosures attached to the main Building, and screened in accordance with this Section. Solid waste for all other types of Building shall be deposited into dumpsters in freestanding enclosures designed in accordance with City standards.

124.26 (B)(10)(m)(2)(IX) All freestanding dumpster enclosures, transformers, mechanical equipment and other Utility equipment or enclosures shall be buffered utilizing Hedges, flowering Shrubs and/or vines equal in Height at time of installation without impacting accessibility or service.

124.26 (B)(10)(m)(2)(X) The west face of the supermarket (Publix) covered loading area shall be stuccoed to match the rear elevation of the supermarket (Publix) Building.

124.26 (B)(11) ***Architectural criteria.***

124.26 (B)(11)(a) General intent and provisions.

124.26 (B)(11)(a)(1) Architectural design of all Weston Commons and parcel buildings shall be designed to be compatible with one another. Superior design and quality materials are required. The design of Buildings adjacent to lakes and Stormwater Detention Areas shall address the impact on views from across the water. All service area walls and other screening elements must be compatible with the Building architecture. Large Facades with no architectural delineation shall be prohibited.

124.26 (B)(11)(a)(2) All Buildings must be designed by a Florida-registered architect.

124.26 (B)(11)(a)(3) Rooftop equipment, antennas, and similar protrusions shall not project above the Parapet or screening. The Building shall include Parapet walls, individual screens or other architectural Building elements to completely screen the offensive elements from view. All screening elements shall relate to the Building's style of architecture and where at grade shall be Landscaped. Solar collectors, satellite dishes and the like shall only be permitted at locations approved by the City.

124.26 (B)(11)(a)(4) Downspouts, roof ladders, and related elements shall be designed to be compatible with the Building architecture and avoid staining the Building façade.

124.26 (B)(11)(a)(5) No walls may be constructed within the Landscape easements or nearer than 25 feet from the side or rear property line. All walls shall be compatible with the surrounding architecture. Walls shall not be constructed in front yards or on site areas visible from major project Streets, except within the retail areas, where buffer walls may be constructed to reduce visibility of Utilities.

124.26 (B)(11)(a)(6) All Buildings shall be reviewed and approved by the City Commission for site plan approval.

124.26 (B)(11)(b) Design strategies.

124.26 (B)(11)(b)(1) A relatively wide variety of architectural design and materials is permitted. However, it is intended that a basic harmony of architecture shall prevail among the several Buildings so that a consistent style is achieved within Weston Commons.

124.26 (B)(11)(b)(2) The basic architectural style of Weston Commons shall be modern and unembellished except for articulation by Building form, window treatment, and roof or entrance features.

124.26 (B)(11)(b)(3) In general, the following shall apply to the design of Building exterior appearance in order to promote harmonious Building design:

124.26 (B)(11)(b)(3)(i) The Height of Buildings shall be visually reduced by the use of Landscape, texture, materials and color.

124.26 (B)(11)(b)(3)(ii) Building shall be designed to be attractive from all road Frontages they are adjacent to.

124.26 (B)(11)(b)(3)(iii) No portion of the roof top equipment may project above the Parapet or screening including all mechanical, electrical equipment, vents and stacks.

124.26 (B)(11)(b)(3)(iv) Colors, materials and finishes shall be coordinated on all exterior elevations to achieve total continuity of design throughout Weston Commons.

Weston Commons and parcels shall incorporate a color palette of no less than three distinct colors.

124.26 (B)(11)(b)(3)(v) All service courts and loading areas shall be screened from view of project roadways and driveways so as to be an integral part of the design of the Building architecture or by location on the site to the rear of public areas. Mature Landscape materials, which complement the Building architecture, may also be used in screening these Uses.

124.26 (B)(11)(b)(3)(vi) Buildings shall be separated within and between parcels according to Setback requirements established in the Design Guidelines. Building massing within Weston Commons shall conform to the overall intent conveyed in the Site Development Plan.

124.26 (B)(11)(b)(4)(i) Roofs shall be tiled and contain a minimum of three but not more than four colors blended to create a roof color.

124.26 (B)(11)(b)(4)(ii) Inclined roof pitches, when used, are to be minimum 4-in-12 pitch and should vary in Height to create movement and elevation interest across not less than 50% of the Facade. The use of features such as clocks, towers, canopies, colonnades, loggias, balconies, cloth awnings and other architectural projections of aesthetic quality are encouraged.

124.26 (B)(11)(b)(4)(iii) Roof projections such as, but not limited to: A/C equipment, exhaust hoods, refrigeration, vents and vent shafts shall be hidden from view by means of parapets or roof designs. No other screening devices shall be allowed.

124.26 (B)(12) ***Landscape and Irrigation.***

124.26 (B)(12)(a) Landscape design standards.

124.26 (B)(12)(a)(1) Landscape design standards have been established to create and perpetuate the quality, character and image of Weston Commons. A complementary series of perimeter Landscaping and open space will be constructed to form a system of green spaces linking the various Uses within Weston Commons. Unity of design shall be achieved through the repetition of plant materials and other Landscape and hardscape materials throughout Weston Commons.

124.26 (B)(12)(a)(2) All planting area widths shall be inclusive of adjacent type "D" curbing.

124.26 (B)(12)(a)(3) All requirements of the City Landscape Code not specifically addressed in this Section shall conform to the City Landscape Code.

124.26 (B)(12)(a)(4) A Tree survey shall be provided at the time of site plan review.

124.26 (B)(12)(b) Landscape design.

124.26 (B)(12)(b)(1) Landscape plans and specifications shall be prepared by a licensed Landscape Architect registered in the State of Florida.

124.26 (B)(12)(b)(2) Landscape design at intersections within Weston Commons Right-Of-Ways shall be formal. Shade or large palm Trees shall be installed on both sides of parcel entrance drives/roads. Individual Trees should be a maximum of 35 feet on center to provide a major impact statement.

124.26 (B)(12)(b)(3) Loose, informal arrangements of Trees in general open areas should be clustered to provide a natural appearance. Street Trees shall be spaced a maximum of 35 feet on center.

124.26 (B)(12)(b)(4) Required visibility shall be provided at all intersections. Berms, Ground Cover and Shrubs shall not exceed a maximum Height of two feet within visibility zones at intersections as defined by local or state codes. Trees shall be positioned to not impede visibility.

124.26 (B)(12)(b)(5) Evergreen Shrubs and/or berms shall be provided to screen parking and service Use areas. Planting for the purpose of screening shall be a minimum of 24 inches in Height at the time of installation and reach a minimum Height of 36 inches within a 12-month period from time of installation.

124.26 (B)(12)(b)(6) Landscaping of adjacent residential parcels shall be considered in the Development of a Landscape design to provide continuity within Weston Commons. Parcels shall not be Landscaped to have an "individual" character at the property line of adjacent existing Landscaping. Single Hedgerows along property lines are discouraged. Massings of Trees, palms and Shrubs are encouraged.

124.26 (B)(12)(b)(7) Landscape material, especially Shrubs, Ground Cover and seasonal color shall be spaced to provide 50% coverage at time of planting and 100% in six months.

124.26 (B)(12)(b)(8) Landscape plans shall indicate all proposed Utilities, site lighting, fire hydrants, backflow preventers, stop Signs, meter banks, and proposed contours.

124.26 (B)(12)(b)(9) All Landscape plans and specifications shall meet or exceed minimum standards as required herein.

124.26 (B)(12)(b)(10) The use of uniform seasonal color throughout Weston Commons shall be implemented.

124.26 (B)(12)(b)(11) Sod shall account for no more than 50% of the provided Pervious Area within the Weston Commons.

124.26 (B)(12)(b)(12) Twenty-five percent of the Vehicular Use Area within the Weston Commons shall be provided as Landscaped area.

124.26 (B)(12)(b)(13) Fifty percent of the required planting areas within Weston Commons shall be native Florida species. The existing On-Site native plant communities shall be used to meet the native plants requirement for the Weston Commons.

124.26 (B)(12)(c) Landscape standards for Vehicular Use Area. Vehicular Use Areas shall be Landscaped to reduce the scale of large paved areas and provide climate control of parking lots.

124.26 (B)(12)(c)(1) Berms, Trees and evergreen Hedges are required within all perimeter planting areas adjacent to Right-Of-Ways as outlined in the Use Standards to provide screening and pedestrian directional flow.

124.26 (B)(12)(c)(2) A minimum of one Tree and 25 one-gallon plants shall be provided in each island.

124.26 (B)(12)(c)(3) All Landscape islands shall be a minimum of 165 square feet and contain at least one shade Tree.

124.26 (B)(12)(d) Drainage Retention Areas. Drainage Retention/detention Areas are to be planted and sloped to blend into the adjacent Landscape area.

124.26 (B)(12)(e) Landscape lighting. Landscape accent lighting of Tree canopies, pathways and general illumination is encouraged.

124.26 (B)(12)(e)(1) Above-ground Landscape lights must be screened within planting beds and mounted at grade.

124.26 (B)(12)(e)(2) Above-ground Landscape lights are prohibited in Lawn areas.

124.26 (B)(12)(e)(3) Well lights only are approved for use in Lawn areas.

124.26 (B)(12)(e)(4) Landscape lights shall be aesthetically compatible with Building and site lights.

124.26 (B)(12)(e)(5) Well lights in Tree grates will be used to uplight Trees in pedestrian areas of Weston Commons.

124.26 (B)(12)(f) Landscape Irrigation system. All Landscape areas shall be irrigated with an automatic Irrigation system of approved design to provide proper plant growth.

124.26 (B)(12)(f)(1) The automatic controlled Irrigation system shall be provided for 100% coverage with 100% overlap of all Landscaped areas.

124.26 (B)(12)(f)(2) The Irrigation system shall utilize rust-free water.

124.26 (B)(12)(f)(3) The system shall be maintained in optimum operating condition at all times.

124.26 (B)(12)(f)(4) Operation of Irrigation systems shall be timed to operate during evening and early morning hours to minimize evaporation and disruption to vehicular and pedestrian Traffic. The system will include a rain sensor.

124.26 (B)(12)(f)(5) No Irrigation shall overspray walk-ways.

124.26 (B)(12)(g) Plant material. All parcels within Weston Commons shall provide a well-defined, maintained and dense Landscape appearance.

124.26 (B)(12)(g)(1) All plant material for Weston Commons will be Florida Fancy or Florida Grade No. 1 as defined by the "Florida State Plant Board Standards for Nursery Stock" and "Grades and Standards for Nursery Plants," State of Florida, Department of Agriculture. Exception: large relocated specimen Trees in excess of six-inch Caliper shall be required only to meet the approval of Butters Development Corporation's Landscape Architect and City staff.

124.26 (B)(12)(g)(2) Plant material shall be installed in accordance with sound horticultural practices.

124.26 (B)(12)(g)(3) All plant material shall have a minimum 1-Year guarantee beginning at final completion of installation of 100% of all plant material as per plans and specifications.

124.26 (B)(12)(g)(4) Installation of 100% of Landscape material and Irrigation to be complete by opening of Building for Tenant Use.

124.26 (B)(12)(g)(5) Trees.

124.26 (B)(12)(g)(5)(i) All Trees are to be specimen quality, with vigorous growth and in a healthy condition.

124.26 (B)(12)(g)(5)(ii) The canopy of Trees is to be dense, and full-headed 360 at the time of installation.

124.26 (B)(12)(g)(5)(iii) Shade Trees shall be used in pedestrian areas:

124.26 (B)(12)(g)(5)(iii)(a) All shade Trees shall be 12 to 14 feet overall in Height with a minimum two-and-one-half inch DBH and a minimum six-foot spread at time of installation.

124.26 (B)(12)(g)(5)(iii)(b) All shade Trees shall have a minimum four-and-one-half feet of Clear Trunk, unless otherwise noted and approved.

124.26 (B)(12)(g)(5)(iii)(c) Shade Trees shall reach a minimum Height of 30 feet and a minimum canopy spread of 20 feet at maturity.

124.26 (B)(12)(g)(5)(iv) Accent Trees.

124.26 (B)(12)(g)(5)(iv)(a) All accent Trees shall be 10 to 12 feet in overall Height with a minimum two-inch DBH and spread of five feet at the time of installation.

124.26 (B)(12)(g)(5)(iv)(b) All accent Trees shall have three-feet Clear Trunk minimum at time of installation.

124.26 (B)(12)(g)(5)(v) Palm Trees.

124.26 (B)(12)(g)(5)(iv)(a) Large Palm Species: (Royal Palms, Bismark Palms, Date Palms, Coconut Palms, Foxtail Palms and the like.) When used as an overstory Tree, the Tree shall have a minimum ten feet of wood. These palms shall be equivalent to a shade Tree for calculation of required plantings.

124.26 (B)(12)(g)(5)(iv)(b) All other palm Trees used as an overstory plant in non-paved areas shall be a minimum of eight feet clear-trunked, clustered a minimum of three per planting in planting beds, and spaced so as not to inhibit the normal growth characteristic of the palms. In locations where Tree grates are used, individual palms are permitted. Tree grates shall be provided in all pedestrian areas.

124.26 (B)(12)(g)(5)(v)(c) Due to the urban pedestrian context of the retail, palm Trees can make up 25% of the City-required Tree requirements.

124.26 (B)(12)(g)(5)(vi) Buffer shade Trees.

124.26 (B)(12)(g)(5)(vi)(a) All buffer shade Trees shall be 16 feet overall in Height with a minimum two-and-one-half inch DBH and a minimum six-foot spread at time of installation.

124.26 (B)(12)(g)(5)(vi)(b) All buffer shade Trees shall have a minimum four-and-one-half feet of Clear Trunk, unless otherwise noted and approved.

124.26 (B)(12)(g)(5)(vi)(c) All buffer shade Trees shall reach a minimum Height of 30 feet and a minimum canopy spread of 20 feet at maturity.

124.26 (B)(12)(h) Shrubs.

124.26 (B)(12)(h)(1) All Shrubs to be minimum three-gallon containerized, dense, 24-inch Height by 24-inch spread minimum, at time of installation.

124.26 (B)(12)(h)(2) All Shrubs used as Hedges shall be installed at no more than 24 inches on center and shall be touching at installation.

124.26 (B)(12)(i) Ground cover and vines. All Ground Cover to be dense, one-gallon containers minimum at time of installation, and planted at 30 inches minimum spacing.

124.26 (B)(12)(j) Grass. All grass areas to be sodded with St. Augustine "Floritam" (*Stenotaphrum secundatum*).

124.26 (B)(12)(k) Seasonal color. At the time of installation, all seasonal color to be a minimum of two-and-one-quarter-inch containers, with the exception of bulbs.

124.26 (B)(12)(l) Plant palette.

124.26 (B)(12)(l)(1) At least 70% of all required Trees and plant materials shall be from the recommended plant palette. However, no more than 25% of required Trees shall be of a palm species.

124.26 (B)(12)(l)(2) At least 15% of entry Landscape planting at parcel signage and 5% of plantings adjacent to front of parcel Buildings shall incorporate the approved seasonal color plant material. The following plant list is the recommended plant palette.

Botanical Name	Common Name
Shade trees:	
Bulnesia arborea	Verawood
Bursera simaruba	Gumbo Limbo
Calophyllum brasiliense	Beautyleaf
Calophyllum inophyllum	Mastwood
Cassia grandis	Pink Shower
Cassia javanica	Apple Blossom Shower
Elaeocarpus decipiens	Japanese Blueberry
Ilex attenuata	'East Palatka'Holly
Ilex cassine	Dahoon Holly
Lagerstroemia indica	Crepe Myrtle
Magnolia grandiflora	'Little Gem'Magnolia
Magnolia grandiflora	'DD Blanchard'Magnolia
Noronhia emarginata	Madagascar Olive
Quercus virginiana	Live Oak

Quercus virginiana	'Cathedral'Live Oak
Quercus virginiana	'Highrise'Live Oak
Tamarindus indica	Tamarind
Taxodium distichum	Common Bald Cypress

Accent trees:

Capparis cynophallophora	Jamaican Caper
Clusia guttifera	Small Leaf Pitch Apple
Cordia boissieri	White Geiger
Filicium decipiens	Japanese Fern Tree
Guaiacum sanctum	Lignum-vitae
Ilex 'Nellie Stevens'	Holly
Krugiodendron ferreum	Black Ironwood
Ligustrum japonicum	'Recurvifolium'Japanese Privet
Myrcianthes fragrans	Simpson Stopper
Senna polyphylla	Desert cassia
Sideroxylon salicifolium	Willow Bustic

Palms:

Bismarckia nobilis	Bismarck
Carpentaria acuminata	Carpentaria
Cocos nucifera	Coconut
Livistona chinensis	Chinese Fan
Phoenix canariensis	Canary Island Date
Phoenix dactylifera	Date
Phoenix sylvestris	Sylvester

Ptychosperma elegans	Alexander
Ptychosperma macarthurii	Macarthur
Roystonea elata	Florida Royal
Roystonea regia	Royal
Sabal palmetto	Sabal
Veitchia montgomeryana	Montgomery
Veitchia winin	Winin
Wodyetia bifurcata	Foxtail

Shrubs:

Bougainvillea spp.	Bougainvillea
Capparis cynophallophora	Jamaican Caper
Chrysobalanus icaco	Cocoplum
Codiaeum variegatum	Croton
Conocarpus erectus	Green Buttonwood
Conocarpus erectus sericeus	Silver Buttonwood
Duranta repens	Golden Dewdrop
Eugenia axillaris	White Stopper
Eugenia foetida	Spanish Stopper
Eugenia rhombea	Red Stopper
Ficus microcarpa	'Green Island' Green Island Ficus
Galphimia gracilis	Thryallis
Hamelia patens	Firebush
Hibiscus spp.	Hibiscus
Ilex vomitoria	Yaupon Holly

Ixora spp	Ixora
Jasminum multiflorum	Downy Jasmine
Jasminum volubile	Wax Jasmine
Muhlenbergia capillaris	Muhly Grass
Myrcianthes fragrans	Simpson Stopper
Philodendron selloum	Philodendron
Philodendron 'Xanadu'	Xanadu
Plumbago auriculata	Plumbago
Podocarpus macrophyllus	Podocarpus
Psychotria nervosa	Wild Coffee
Rapanea punctata	Myrsine
Rhaphiolepis indica	Indian Hawthorne
Schefflera arboricola	Dwarf Schefflera
Schefflera arboricola	'Trinette'Trinette
Trachelospermum jasminoides	Confederate Jasmine
Tripsacum dactyloides	Fakahatchee
Tripsacum floridana	Dwarf Fakahatchee
Viburnum odoratissimum	Sweet Viburnum

Seasonal Color: Submit proposal for review and approval.

124.26 (B)(12)(m) Prohibited plant species. The following plant species are prohibited from Use:

124.26 (B)(12)(m)(1) *Acacia auriculaeformis* (a/k/a earleaf acacia)

124.26 (B)(12)(m)(2) *Araucaria heterophylla* (a/k/a Norfolk Island pine)

124.26 (B)(12)(m)(3) *Ardisia solanecea* (a/k/a shoebutton ardisia)

124.26 (B)(12)(m)(4) *Bischofia javanica* (a/k/a toog)

124.26 (B)(12)(m)(5) *Brassaria actinophylla* (a/k/a schefflera)

124.26 (B)(12)(m)(6) *Casuarina tTrees* (a/k/a Australian pine)

124.26 (B)(12)(m)(7) *Cupaniopsis anacardiodes* (a/k/a carrotwood)

124.26 (B)(12)(m)(8) *Dalbergia sisoo* (a/k/a rosewood)

124.26 (B)(12)(m)9) *Grevillea robusta* (a/k/a silk oak)

124.26 (B)(12)(m)(10) *Hibiscus tiliaceus* (a/k/a mahoe)

124.26 (B)(12)(m)(11) *Lucaena leucocephala* (a/k/a lead Tree or jumbie bean)

124.26 (B)(12)(m)(12) *Melaleuca quinquenervia* (a/k/a punk Tree or paper bark)

124.26 (B)(12)(m)(13) *Metopium toxiferum* (a/k/a poisonwood)

124.26 (B)(12)(m)(14) *Rhodomyrtus tomentosa* (a/k/a downy rose myrtle)

124.26 (B)(12)(m)(15) *Schinus terebinthifolius* (a/k/a Brazilian pepper or Florida holly)

124.26 (B)(12)(m)(16) *Bucida buceras* (a/k/a black olive)

124.26 (B)(12)(m)(17) *Callistemon viminalis* (a/k/a/ weeping bottlebrush)

124.26 (B)(13) ***Landscape, grading and drainage.***

124.26 (B)(13)(a) Site grading shall be done to preserve and enhance the topographic features and to provide positive drainage.

124.26 (B)(13)(b) No slope of any type shall be steeper than 3:1. Where space limitations demand, terracing with approved retaining walls shall be utilized. Where retaining walls are required, materials shall be compatible with the site standards and shall be approved at time of Site Plan review. Utilities locations must be integrated with the Landscape plan.

124.26 (B)(13)(c) Berms, channels, Swales, and the like shall be graded as to be an integral part of the grading, and designed with smooth transitions between changes in slope. Berms should not interrupt Swale drainage.

124.26 (B)(13)(d) Surface drainage shall be collected on site and connected to underground storm drains. Drainage is to be conveyed in accordance with the master drainage plan.

124.26 (B)(13)(e) Run-off should be directed away from Building pads at a minimum slope of 2% in Landscape areas.

124.26 (B)(13)(f) Drainage from roof tops shall not directly outfall into planted or pedestrian areas.

124.26 (B)(14) ***Landscape construction procedures and precautions.***

124.26 (B)(14)(a) The following measures are to be incorporated to minimize soil erosion by water and wind.

124.26 (B)(14)(a)(1) Remove all invasive plant materials referred to in subsection (B)(2)(m)(13), but no more other vegetation than necessary.

124.26 (b)(14)(a)(2) Install temporary Mulching on areas to be left bare of plant material for an extended period of time.

124.26 (B)(14)(a)(3) Provide temporary ditches, dikes, desilting basins and/or vegetation to remove sediment from run-off water during Development.

124.26 (B)(14)(b) The Construction personnel are responsible for knowing the location of existing Utilities and must protect existing Utilities during the Construction.

124.26 (B)(14)(c) Construction sites shall be maintained in a neat and orderly manner. All trash shall be kept in enclosed containers and removed frequently.

124.26 (B)(14)(d) Construction access shall be coordinated with the Developer. Special care shall be taken to protect existing pavements and Landscaping from damage.

124.26 (B)(14)(e) Approval shall not be required for the temporary storage of materials, equipment and supplies needed for the Construction of permanent improvements upon a site, provided they are completely removed immediately upon completion of Construction.

124.26 (B)(15) ***Landscape maintenance.*** Landscape maintenance shall be of highest quality to provide at all times a clean, orderly, and manicured appearance. The party responsible for maintenance will be identified in the Association Documents.

124.26 (B)(15)(a) All dead or dying plant material shall be removed immediately.

124.26 (B)(15)(b) Replacements of removed plant material shall be made within a 15 day period of beginning at date of removal.

124.26 (B)(15)(c) Sites shall be policed regularly to eliminate On-Site litter.

124.26 (B)(15)(d) A seasonal color program shall accompany the Landscape maintenance proposal.

124.26 (B)(15)(e) Seasonal color shall be provided continually in winter, spring, summer, and fall. "Spent" plant material shall be replaced immediately.

124.26 (B)(15)(f) All Landscape areas shall be kept weed free.

124.26 (B)(15)(g) Landscape areas shall be watered, fertilized, cut, pruned, and treated for insects regularly to maintain a healthy, vigorous, and well-kept appearance.

124.26 (B)(15)(h) Landscape maintenance of parcels is the responsibility of the respective owners.

124.26 (B)(15)(i) Landscape maintenance of all Right-Of-Ways, common open space, and conservation areas are the responsibility of the developer or its designee.

124.26 (B)(15)(j) Maintain Mulch in a clean and neat condition with a minimum three-inch cover in all planting beds. Restore as necessary with clean Mulch of the same type as that at installation.

124.26 (B)(15)(k) Fertilization shall be a part of the required maintenance activities. Fertilizer shall be applied following manufacturer's specifications. Any evidence of nutrient deficiency shall be addressed during fertilization.

124.26 (B)(15)(l) The Irrigation system will be a required portion of the maintenance activities to ensure Lawns and plantings receive sufficient water to maintain healthy growing conditions.

§ 124.27 ISLES AT WESTON PLANNED DEVELOPMENT DISTRICT.

Development of property within the Isles of Weston Planned Development District shall be governed by, and comply with, the Design Guidelines set forth below. Those aspects of the Development that are not regulated by the Design Guidelines shall be governed by the underlying zoning district provisions.

ISLES AT WESTON

Weston, Florida

PDD DESIGN GUIDELINES
May 23, 2001

Carnahan, Proctor & Cross, Inc.
6101 West Atlantic Boulevard
Margate, Florida 33063

TABLE OF CONTENTS

I. INTRODUCTION
II. EXISTING CONDITIONS
III. GENERAL DATA
IV. OWNERS ASSOCIATION/ARB
V. MASTER DEVELOPMENT PLAN
VI. OPEN SPACE
VII. ZONING
VIII. ROADS/INFRASTRUCTURE
IX. LANDSCAPE
X. LIGHTING
XI. SIGNAGE

EXHIBITS

FIGURE 1 LOCATION MAP
FIGURE 2 LAND USE MAP
FIGURE 3 ZONING MAP
FIGURE 4 LEGAL DESCRIPTION
FIGURE 5 AERIAL
FIGURE 6 MASTER DEVELOPMENT PLAN
FIGURE 7 PERVIOUS/GREENSPACE
FIGURE 8 LANDSCAPE BUFFERS
FIGURE 8A BUFFER CONSTRUCTION PHASES
FIGURE 9 LANDSCAPE DATA FORM
FIGURE 10 40′ TYPICAL LANDSCAPE BUFFER
FIGURE 11 25′ TYPICAL LANDSCAPE BUFFER
FIGURE 12 15′ TYPICAL LANDSCAPE BUFFER
FIGURE 13 INTERNAL ROADWAY SECTIONS
FIGURE 14A RECREATIONAL AREA CONCEPT PLAN
FIGURE 14B CLUBHOUSE CONCEPT
FIGURE 14C CABANA
FIGURE 15A ENTRANCE FEATURE CONCEPT PLAN
FIGURE 15B GUARDHOUSE CONCEPT
FIGURE 15C ENTRANCE MONUMENT CONCEPT
FIGURE 15D COMMUNITY ENTRY MONUMENTS
FIGURE 15E ENTRANCE FEATURES
FIGURE 15F ENTRANCE FEATURES

I. INTRODUCTION

Isles at Weston (aka Gulfstream) is a Planned Development District (PDD) composed of Residential, Recreational, Community Facility, and Park uses, including a system of lakes and mitigation areas. The Declarant, Centex Homes (8198 Jog Road, Boynton Beach, FL 33437), has planned the community with an emphasis on open space and security, highlighted by the creation internally of large lakes, wetland preserve, and dedicated park/open space/recreational areas totaling 159.29 acres. The Isles at Weston community will total approximately 328.0 acres with an overall density of 2.0 residential units per acre.

The proposed site is located in the City of Weston and lies within Land Section 24 and 25, Township 50 South, Range 39 East. This planned development district (PDD) rezoning application is for the purpose to define zoning regulations consistent with the City and County Land Use Designations and to demonstrate that the intended use of the parcel is in accordance with the City and County development goals and objectives.

The Isles at Weston PDD shall consist of 655 single family home sites. Supporting this residential is a 6.1 acre park/recreational area together with an entrance feature, community entry features,

roads, and buffer areas. There will be three (3) lot sizes available and sub-parceled as separate PDD zones.

This submittal is made in accordance with Ordinance No. 98-41 of the City of Weston Land Development Code and Resolution No. 2001-09 approving the developers Agreement between the City of Weston and Ronald M. Bergeron Sr. for the Gulfstream property. This Resolution No. 2001-09 and the Development Agreement were recorded in the Public Records of Broward County, Book 31200, Page 0774 on January 19, 2001.

II. EXISTING CONDITIONS

The proposed site contains approximately 328.0 acres of land which is currently vacant. The site is generally located south of the Estates of Swan Lake PDD, north of the C-11 canal (Griffin Road), east of US 27 (US Nature Center) and west of Bonaventure Boulevard (Educational Complex and Windmill Lake Estates). The location of the site is graphically shown on the location map (see Figure 1). The property has a Land Use designation of Low (2) Residential and the current zoning is A-1. See Figures 2 and 3 for the existing Land Use and Zoning Maps. See Figure 4 for the property legal description.

Current and historical use of the property is improved pasture. The degraded wetlands have been assessed by the Broward County Department of Planning and Environmental Protection (DPEP), the South Florida Water Management District (SFWMD), and the U.S. Army Corps of Engineers (ACOE). The evaluations have established that a total of ± 63.27 acres of mitigation is proposed to compensate for wetland impacts. Environmental regulatory permits are pending.

The Soil Survey of Broward County, Florida indicates that Dania Much was historically the primary soil type in the area with a minor component of Lauderhill Muck. Both soils are described as "nearly level, very poorly drained, organic soil underlain by limestone" at 14 to 20 inches and 20 to 40 inches respectively. This area is predominantly flat with ground elevations of 4.5' NGVD to 5.5' NGVD.

This project is located entirely within the Indian Trace Development District. Lake and Canal easements within the property will be dedicated to either the City/Indian Trace Development District or the Isles at Weston Owners Association.

An aerial exhibit of the property is attached (see Figure 5).

III. GENERAL DATA

Location	Weston, Florida
Proposed Zoning	P.D.D.
Land Use	Low (2) Residential
Dwelling Units	655 DU
Gross Acreage	328.0 Acres
Conservation Area	63.27 Acres

Lake Area (including L.M.E.)	63.85 Acres
Density	2.0 DU/Acre

PDD Zones	***Type***	***No. of Units***
PDD SF-1	55′ x 110′	374 DU
PDD SF-2	65′ x 115′	211 DU
PDD SF-3	80′ x 130′	70 DU

IV. OWNERS ASSOCIATION/ACB

In order to insure the continuity of the community and to maintain the intended goals of the Development, there will be created the Isles at Weston Owners Association (IAWOA). The IAWOA is a master association over the residential community's common areas, conservation and lake areas, private roadways, recreational amenities, buffers and other similar amenities serving the Development as a whole. A maximum of three (3) Neighborhood Associations are contemplated to be created. The Neighborhood Associations shall be responsible for the maintenance of the common property lying within their respective boundaries.

The IAWOA shall be responsible for the enforcement of the various restrictive covenants applicable to the Residential property. To that end, the IAWOA has created an Architectural Control Board (ACB) over the residential elements. The all proposed construction modifications, and revisions to provisions of the applicable protective covenants and restrictions, the provisions contained in this manual and the codes and ordinances as applicable.

USES PERMITTED: All residential land within the Isles at Weston development, in order to be permitted, must secure approval from the ACB and be permitted by the zoning code of the City of Weston except as amended in these Design and Development Standards. However, the ACB has the right to be more restrictive than the City in controlling the manner in which any property/lot is developed.

GENERAL CONDITIONS: No construction shall be allowed to commence, within Isles of Weston, unless it fully complies with all provisions and applicable Design and Development Standards, building codes, City of Weston Zoning Ordinances, and any other appropriate governmental regulations. All required permits from all pertinent public agencies must be obtained and fees paid prior to commencement of construction. Any future request, by a property owner within the development, for modification of existing structures, new additions or alterations shall be subject to the regulations and approvals of the restrictive covenants contained in the IAWOA Documents or the Neighborhood Association Documents, the City of Weston, and other appropriate regulations.

ENFORCEMENT: The enforcement of these Design and Development Standards shall be delegated by the Board of Directors of IAWOA, and the City of Weston.

DEFINITIONS: The definitions for these Design and Development Standards shall follow the City's definitions in accordance with the City of Weston Zoning Ordinances and the Developers

Agreement between the City of Weston and Ronald M. Bergeron Sr. date January 18, 2001 (City Resolution No. 2001-09).

ARCHITECTURAL CONTROL BOARD (ACB): The ACB shall adopt a separate manual on Design and Development standards that shall serve as a guide for the community's planning, design, and development in order to assure quality and continuity. These design and development standards include (but are not limited to) materials, colors, maintenance of common area, easements, accessory structures (i.e. tool sheds, playground equipment, pool decks). Any improvements on the residential property shall be approved by the ACB and the City of Weston. The authority for the enforcement of these ARB design and development standards is contained in the "Declaration of Protective Covenants, Restrictions, and Easements for Isles at Weston" to be recorded in the public records of Broward County and through the requirements of the City of Weston to establish standards for lands zoned P.D.D. This ARB manual may be amended from time to time with the approvals of the Board of Directors of the IAWOA.

V. MASTER DEVELOPMENT PLAN

The Master Development Plan is shown in Figure 6 and illustrates the configuration and land use of the P.D.D. The project as proposed consists of three (3) residential components, conservation component, recreational area component, entrance feature component together with community entry features, park component and school component (community facility).

RESIDENTIAL: The residential component is made up of three (3) PDD zones for detached single family units with garages and accessory buildings, as permitted by the City's Land Development Code. Each P.D.D. zone reflects the particular lot size that the units are designed for.

Residential Component	Acreage	DU
PDD Zone SF-1 (55′ x 110′)	58.51 Ac.	374
PDD Zone SF-2 (65′ x 115′)	41.14 Ac.	211
PDD Zone SF-3 (80′ x 130′)	19.00 Ac.	70
Open Space		
• Common Areas	20.56 Ac.	
• Lakes (w/LME)	63.85 Ac.	
• Conservation Area	63.27 Ac.	
Roadways (internal)		
		655

Maintenance of common areas shall be the responsibility of the IAWOA. The private roadways will be perpetually maintained by the IAWOA and cost of maintenance will be included as part of the IAWOA maintenance fee.

Unless prohibited by the applicable governmental authority, the Owner of a Lot shall be responsible for maintaining the property between the edge of his Lot line and the edge of pavement of the adjacent private roadway.

The Developer shall have the right to assemble the platted lots into larger lots by combining two lots or by combining one lot with another lots. In the case of such assemblages a unity of title shall be provided to the City for the enlarged lot area. Where a lot is combined with a portion of another lot, the remaining portion of subdivided lot shall be combined with the adjacent lot so that two enlarged lots are created from three lots and a unity of title shall be provided to the City of each of the lots. No additional building lots or parcels (in total) shall be created by these modifications nor shall they result in lots smaller than the minimum lot dimensions with the development PDD zone.

CONSERVATION: The 63.27 acres of conservation area will consist of wetland mitigation and be used for surface water management. This property will be subject to restrictive covenants that will limit the use of the property and prohibit any residential units on these conservation areas. This mitigation area shall be subject to a conservation easement requiring this area to be maintained as a wetland. The conservation area shall be conveyed to the Isles at Weston Owners Association.

RECREATIONAL AREA: The 6.10 acres of recreational area is to be a private recreational area for the Isles at Weston community. This area may consist of several amenities including (but not be limited to);

- Clubhouse w/ related parking facilities
- Cabana
- Pool w/ accessory structures
- Tot lot
- Basketball and Tennis Courts
- Open space w/ any accessory structures and landscaping

ENTRANCE/COMMUNITY ENTRY FEATURES:

The Isles at Weston P.D,D. shall have an entrance feature to consist of (but not be limited to);

- Guardhouse
- Entrance Monument Sign
- Accessory features such as gates, pedestrian brow's, pilasters with aluminum (or approved equal) fence / panels and landscape
- See Figures 15A, 15B, *15C,* 15E, and 15F for the Entrance concept plans.

Entry features shall be provided at the entrances to each of the PDD zone communities and shall consist of (but not be limited to);

- Monument sign
- Accessory Brow's and landscape
- See Figures 1 5D for the community entry concept plan

The entrance and community entry features shall be common area and maintained by the IAWOA and Community Associations respectively.

PARK/SCHOOL: The isles at Weston P.D.D. will have twelve (12) acres dedicated to the City as per the City Resolution No. 200 1-09 approving the Developers Agreement between the City of Weston and Ronald M. Bergeron Sr. This dedication and terms of said agreement shall satisfy school and community facility impacts on the property and shall satisfy live (5) acres of Park / open space requirements by the City as per their Land Development Regulations.

BUFFERS: The Isles at Weston P.D.D. shall have perimeter buffers as shown on Figures 8, 10, 11 and 12. These buffers shall meet the requirements of the City of Weston Land Development Code.

Buffers shall not incorporate a block or concrete wall feature but may incorporate a chain link fence with vinyl clad.

PHASED CONSTRUCTION: Perimeter buffers may be phased such that prior to the issuance of the first building C.O. and acting as the first Phase, the required buffers shall be completed along SW 36th Street and Vista Park Blvd. extension by the School Board. Subsequent phasing of the buffer construction shall be completed in four phases for a total of five phases. These phases are the western boundary adjacent to the PDD Zone SF-3, western boundary adjacent t the PDD Zone SF-I, eastern boundary south of the Phase I buffer adjacent to Vista Park Blvd. and the south boundary (C-i I canal). See Figure 8A for the phased layout of the perimeter buffers.

VI. OPEN SPACE

The Isles at Weston P.D.D. contains a significant amount of open space consisting of the following:

Conservation Area	63.27 Acres
Lakes (w/Lake Maintenance Area)	63.85 Acres
Landscape Buffer and Common Areas	*20.56* Acres
Park	5.0 Acres
Recreation Area	6.10 Acres
Total Open Space Provided (exclusive of pervious area within lots)	158.78 Acres
Open Space Percentage (See Figure 7 for Pervious / open areas)	48%

Lake areas and lake maintenance areas shall be conveyed to the Isles at Weston Owners Association and be used for water management for the Isles at Weston Development. The Landscape open space and buffer areas shall be owned and maintained by the Isles at Weston Owners Association. These open and buffer areas (see Figure 8) shall be designed in accordance with the cross sections shown in Figures 10, 11, and 12.

VII. ZONING

The Master Development Plan is depicted on Figure 6. This Plan illustrates the property's subdivision of the residential parcels, recreation area and public facilities. Although Isles at Weston is zoned by the City of Weston as a P.D.D., each Residential parcel and each group of lots therein will be subject to their own unique requirements for setbacks, height, use and other similar matters. For the purposes of the Design and Development Standards, each set of unique requirements will be referred to as "PDD Zones".

The following PDD Zones have been established for the residential property within the Isles at Weston P.D.D. setting forth use, coverage, setback, landscaping, and other development restrictions:

SF-I (single family detached)	55′ X 110′ lot
SF-2 (single family detached)	65′ X 115′ lot
SF-3 (single family detached)	80′ X 130′ lot

Notwithstanding anything to the contrary, contained in these Design and Development Standards, the Isles at Weston residential development is restricted to 656 residential units.

PDD ZONE SF-1

Permitted Use: One-family detached dwelling and related accessory uses.

Minimum Lot Size: 6,050 sq. ft. (55′ X 110″)

Minimum Floor Area: 1,900 sq. ft. of air conditioned space.

Maximum Height: 40 ft. (to the highest point of the roof).

Minimum Frontage: 55 ft. (except on pie-shaped or irregular shaped lots where 55 ft. shall he measured at the front setback line and the minimum street frontage shall be 30 feet).

Front Yard Setback: 18 ft. Front yard requirements are exclusive of sidewalks except as amended in these Design and Development Standards.

Rear Yard Setback: 10 ft. minimum. Rear yard setbacks for lots adjacent to lakes are exclusive of any required maintenance easements.

Side Yard Setback: 5.0 ft.

Street Side Yard: 15 ft. (For key lots, where the street side yard is a continuation of a front yard for an adjoining lot).

Corner Lots: Lots fronting on two (2) streets have the front yard setback on the street the unit faces. The other street shall be considered a street side yard. The yard opposite the front of the unit shall, be considered the rear yard and the other side shall be the side yard.

Landscaping: Landscaping requirements shall be in accordance with the applicable provisions of the City of Weston, Code of Ordinances and the Landscape section of these Design and Development Standards.

Accessory Uses: All accessory structures (screen enclosures, pools, etc.) shall meet the following set back requirements:

Front: 18 feet

Side: 5 feet

Rear: 5 feet (1 0′ for screened enclosure)

Any type of hard roof over a patio shall meet the required building setback. There shall be no accessory structures within lake maintenance easements.

PDD ZONE SF-2

Permitted Use: One-family detached dwelling and related accessory uses.

Minimum Lot Size: 7,475 sq. ft. (65′ X 115′)

Minimum Floor Area: 2,200 sq. ft. of air- conditioned space.

Maximum 1-leight: 40 ft. (to the highest point of the roof).

Minimum Frontage: 65 ft. (except on pie-shaped or irregular shaped lots where the 65 ft. shall be measured at the front building line. In no event shall the frontage at right-of-way be less than 30 ft.)

Front Yard Setback: 20 feet to structure. Front yard requirements are exclusive of sidewalks except as amended in these Design and Development Standards.

Rear Yard Setback: 10 ft. Rear yard setbacks for lots adjacent to lakes are exclusive of any required lake maintenance easements.

Side Yard Setback: 5 ft. setback from property line.

Street Side Yard: 1 5 ft. to structure. (For key lots, where the street side yard is a continuation of a front yard for an adjoining lot).

Key Lots: Where a rear yard is adjacent to another home's side yard, only single story homes shall be permitted. Two story homes on either one or both of the lots maybe allowed subject to approval by both the City of Weston and the ACB.

Corner Lots: Lots fronting on two (2) streets shall have front yard setbacks on the street the unit faces. The other street shall be considered a street side yard.

Landscaping: Landscaping requirements shall be in accordance with the applicable provisions of the City of Weston Code of Ordinances, and the Landscape section of these Design and Development Standards.

Accessory Uses: All accessory structures (screen enclosures, pools, etc.) shall meet the following set back requirements:

Front: 20 feet

Side: 5 feet

Rear: 5 feet (10' for screened enclosure)

Any type of hard roof over a patio shall meet the required building setback. There shall be no accessory structures within lake maintenance easements.

PDD ZONE SF-3

Permitted Use: One-family detached dwelling and related accessory uses.

Minimum Lot Size: 10,400 sq. ft.

Minimum Floor Area: 2,500 sq. ft. of air- conditioned space

Maximum Height: 40 ft. (to the highest point of the roof).

Minimum Frontage: 80 ft. (except on pie-shaped or irregular shaped lots where the 80 ft. shall be measured at the front building line. In no event shall the frontage at right-of-way be less than 30 ft.)

Front Yard Setback: 20 feet to structure. Front yard requirements are exclusive of sidewalks except as amended in these Design and Development Standards.

Rear Yard Setback: 15 ft.

Rear yard setbacks for lots adjacent to lakes are exclusive of any required lake maintenance easements. Any type of hard roof covering a patio must meet the minimum required setbacks.

Side Yard Setback: 7.5 ft. setback from property line.

Street Side Yard: 15 ft. to structure. (For key lots, where the street side yard is a continuation of a front yard for an adjoining lot).

Key Lots: Where a rear yard is adjacent to another home's side yard, only single story homes shall be permitted. Two story homes on either one or both of the lots may be allowed subject to approval by both the City of Weston and the ACB.

Corner Lots: Lots fronting on two (2) streets shall have front yard setbacks on the street the unit faces. The other street shall be considered a street side yard.

Landscaping: Landscaping requirements shall be in accordance with the applicable provisions of the City of Weston Code of Ordinances, and the Landscape section of these Design and Development Standards.

Accessory Uses: All accessory structures (screen enclosures, pools, etc.) shall meet the following set back requirements:

Front: 20 feet

Side: 7.5 feet

Rear: 5 feet (10' for screened enclosure)

Any type of hard roof over a patio shall meet the required building setback. There shall be no accessory structures within lake maintenance easements.

ISLES AT WESTON DESIGN DEVELOPMENT CRITERIA

Housing Type *1	Total Number Permitted	Lot Size *2	Mm. Lot Sq. Ft.	Mm Lot Width *5	Mm. Lot Depth *6	Mm. Lot Frontage	Mm. Home Sq. Ft. *3	Max. Hgt. Ft. *4	Setbacks Front (Bldg.) Ft.	Setback Front (Garage) Ft.	Setback Rear (Building) Ft.	Setback Rear (S/P) Ft. *7	Setback Side Ft.	Setback Street Side Ft.
PDD Zone SF-I	374	55'x 110'	6,050	55	110	30	1900	40	18	18	10	10/5	5	15
PDD Zone SF-2	211	65'x 115'	7,475	65	115	30	2200	40	20	20	10	10/5	5	15
PDD Zone SF-3	70	80' x 130'	10,400	80	130	30	2500	40	20	20	15	10/5	7.5	15

*** FOOTNOTES:**

1. If a lot size is not specified above, design guidelines for most similar lot size will be utilized.
2. Platted and/or **lot** of sale.
3. Air conditioned living area.
4. Measured to peak of roof.
5. A minimum is measured as an average of the front and rear setbacks for irregularly shaped lots.
6. For pie shaped lots, the minimum depth may be reduced by not more than 40'; all other lots may not be reduced to less than the minimum specified.
7. (S/P) = Screened enclosure setback/pool setback when not screen enclosed.

NOTE:
Signage, landscaping and irrigation requirements for each housing type will be provided in accordance with current or amended City of Weston Code.

VIII. ROADS/INFRASTRUCTURE

ROADS: Isles at Weston will be comprised of private roadways. The rights of way width may vary from 50 feet to 80 feet. The typical roadway sections including sidewalk shall be in accordance with City of Weston Land Development code or as amended through these Design and Development standards (see Figure 14). Sidewalks shall be provided on through streets as either one eight- foot (8′) or two four — foot (4′) sidewalks.

INFRASTRUCTURE: Water and sewer for the project will be provided by the City of Weston. Stormwater management shall be handled onsite with discharge into Ditch 3 or the C-I 1 canal. The stormwater will be controlled to assure that minimum roadway elevations are at the 10 yr. – 1-day storm event and finished floor elevations are above the 100-year 3-day storm stage. The water management system shall be in accordance with the criteria of the South Florida Water Management District and the City of Weston Water Control District.

EXCAVATION: The subsurface at this site generally consists of rock overlain with a layer of muck two (2) to four (4) feet thick. The rock in this area is normally very hard and difficult to excavate. It is anticipated that the rock will be blasted then excavated using conventional methods.

LAND DEDICATION: Land dedication and all modifications, dedications, and vacation of utility, canal, landscape, lake maintenance easements and right of way vacations shall be made in accordance with the City of Weston Land Development Code and shall be handled concurrently with the Plat, rezoning, and site plan approval process. The Declarant proposes to dedicate to the IAWOA the private roadways and all other common areas within the P.D,D.

DEVELOPMENT STANDARDS: The development of the Isles at Weston P.D.D. shall comply with the applicable regulations and ordinances of the City of Weston or as amended in these Design and Development standards.

IX. LANDSCAPE AND IRRIGATION

A City of Weston Landscape Specification for Single Family Dwelling Form shall be completed and submitted to the City for each individual lot (see Figure 9).

Street Trees:	1 Street Tree for approximately 35 linear feet of right of way
Sod:	No more than 80% of the landscape areas will be sod. All pervious areas shall be landscaped with Floratam sod and/or planting beds.
Screening Plants:	Plant material used for screening all above ground equipment shall be equal to the height of such elements.
Site Lighting & Trees:	No Canopy Tree shall be located within 12′ of a light pole and no Palm species within 6′ of a light pole.

Total landscaped area for the Isles at Weston P.D.D. shall meet the 50% native requirement for trees and for shrubs.

Entrance landscape concepts shall be designed around a guardhouse and accessory features such that a causeway feeling is created with water views on each side. See Figures 15A, l5B, ISC, 15E, and 15F for completed concept plans. Landscaping for the concepts as represented in these Design and Development standards shall be in accordance with the City of Weston Code.

A street landscape plan shall he consistent with the applicable provisions of the City of Weston Code. Minimum Landscape requirements, minimum tree height, size of trees within the Isles at Weston P.D.D. shall be in accordance with applicable standards of the City of Weston Code.

All landscape areas shall he served by a permanent irrigation system. Irrigation systems will be designed in accordance with City of Weston Code.

X. LIGHTING

All internal roadways shall have street lights installed to provide a safe lighting environment while creating an attractive ambiance common to low density development. Lighting shall be in accordance with the City of Weston code.

XI. SIGNAGE

The objective of a quality signing and graphics program is to present a clear hierarchy of information, direction, and organization. Conformity in style, materials, and location of signage will be a major element in establishing the design theme continuity within the Isles at Weston P.D.D. Signage shall be in accordance with the applicable codes of the City of Weston.

EXHIBITS

FIGURE 1	LOCATION MAP
FIGURE 2	LAND USE MAP
FIGURE 3	ZONING MAP
FIGURE 4	LEGAL DESCRIPTION
FIGURE 5	AERIAL
FIGURE 6	MASTER DEVELOPMENT PLAN
FIGURE 7	PERVIOUS/GREENSPACE
FIGURE 8	LANDSCAPE BUFFERS
FIGURE 8A	BUFFER CONSTRUCTION PHASES
FIGURE 9	LANDSCAPE DATA FORM
FIGURE 10	40′ TYPICAL LANDSCAPE BUFFER
FIGURE 11	25′ TYPICAL LANDSCAPE BUFFER
FIGURE 12	15′ TYPICAL LANDSCAPE BUFFER
FIGURE 13	INTERNAL ROADWAY SECTIONS
FIGURE 14A	RECREATIONAL AREA CONCEPT PLAN
FIGURE 14B	CLUBHOUSE CONCEPT
FIGURE 14C	CABANA
FIGURE 15A	ENTRANCE FEATURE CONCEPT PLAN
FIGURE 15B	GUARDHOUSE CONCEPT
FIGURE 15C	ENTRANCE MONUMENT CONCEPT
FIGURE 15D	COMMUNITY ENTRY MONUMENTS
FIGURE 15E	ENTRANCE FEATURES
FIGURE 15F	ENTRANCE FEATURES

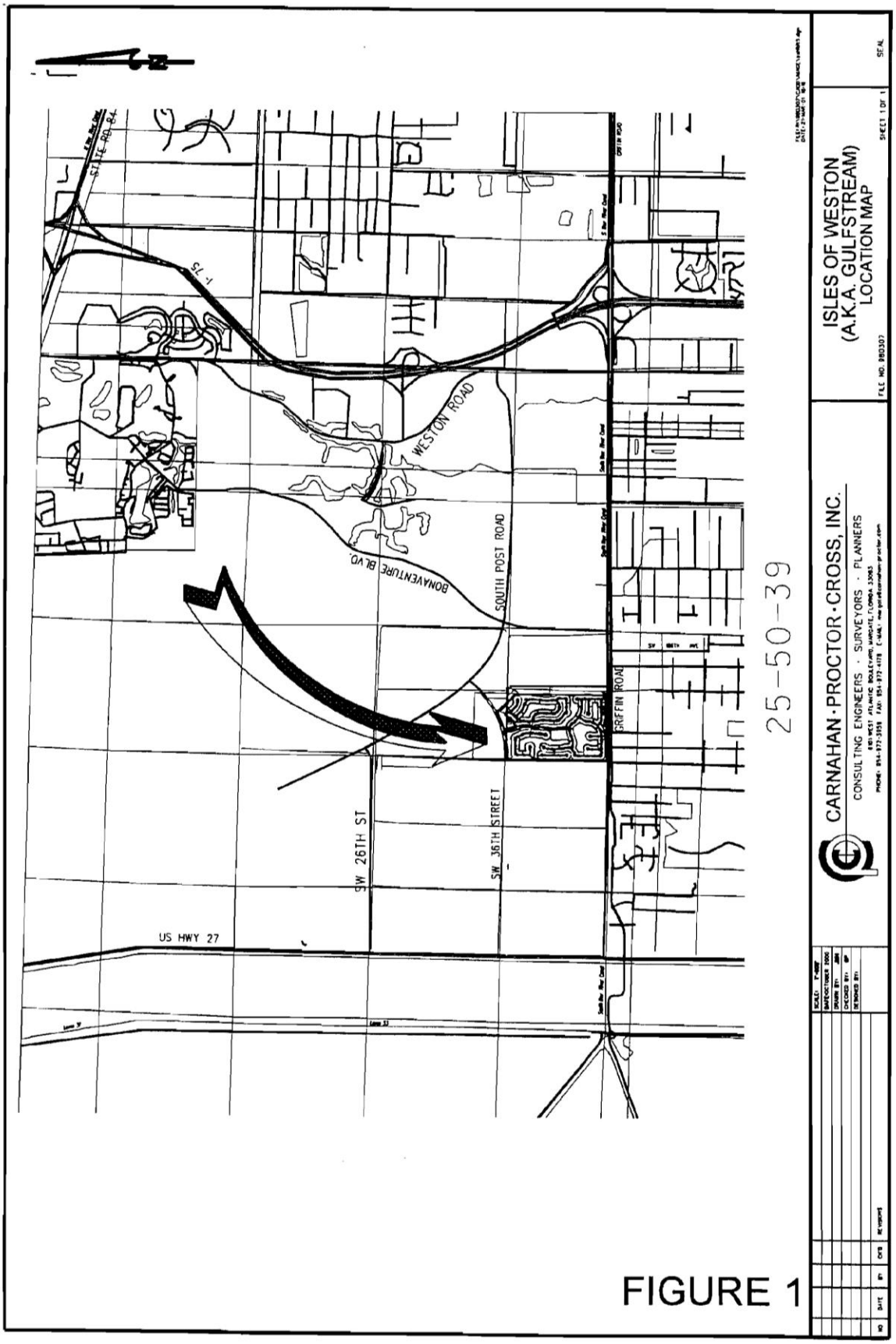
STATE RD. 84
I-75
WESTON ROAD
BONAVENTURE BLVD.
SOUTH POST ROAD
GRIFFIN ROAD
SW 26TH ST
SW 36TH STREET
US HWY 27
25-50-39
CARNAHAN·PROCTOR·CROSS, INC.
CONSULTING ENGINEERS · SURVEYORS · PLANNERS
ISLES OF WESTON
(A.K.A. GULFSTREAM)
LOCATION MAP
SHEET 1 OF 1
SEAL
FIGURE 1

CARNAHAN · PROCTOR · CROSS, INC.
CONSULTING ENGINEERS · SURVEYORS · PLANNERS
6101 WEST ATLANTIC BOULEVARD, MARGATE, FLORIDA 33063
PHONE: 954-972-3959 FAX: 954-972-4178 E-MAIL: margate@carnahan-proctor.com

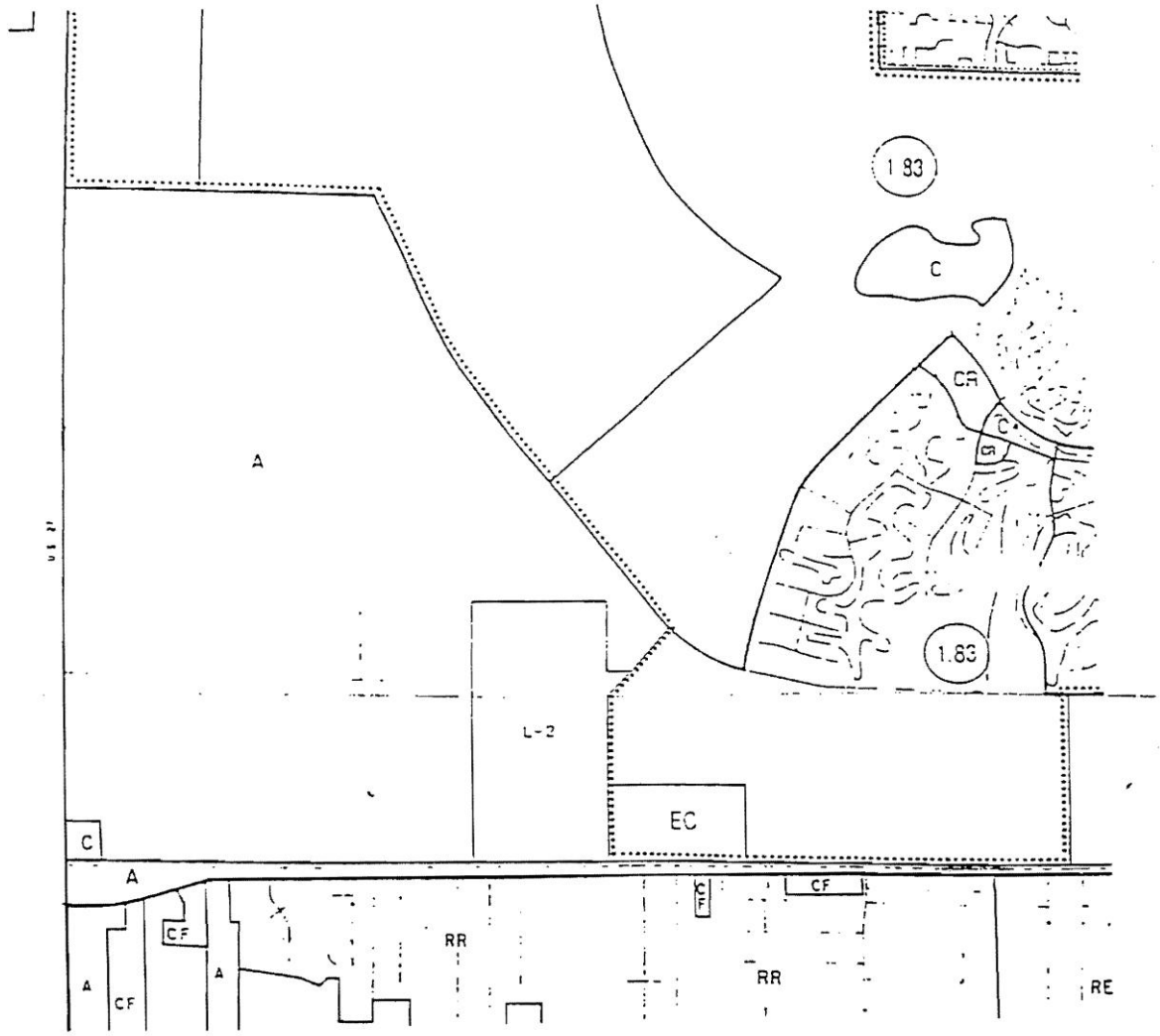

FIGURE 2

JOB NO.	980307	DWG BY:	JMH	SCALE:	N/A	LAND USE MAP
	ISLES OF WESTON	CK'D By:	JMH	DATE:	MARCH 2001	SHEET 1 OF 1 SHEETS

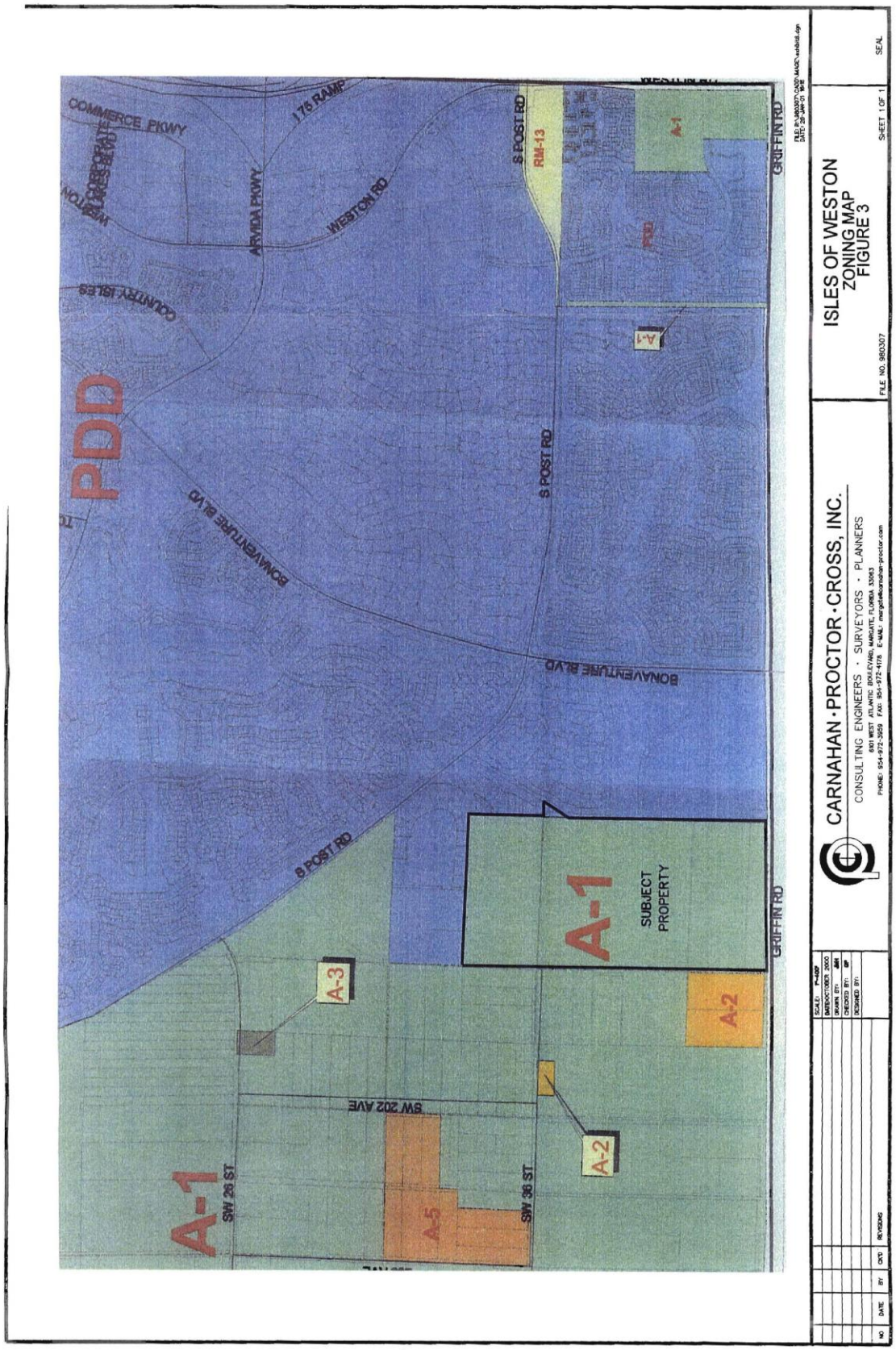
PDD
COMMERCE PKWY
I 75 RAMP
ARVIDA PKWY
WESTON RD
COUNTRY ISLES
BONAVENTURE BLVD
S POST RD
RM-13
A-1
A-3
A-2
A-5
SUBJECT PROPERTY
GRIFFIN RD
SW 202 AVE
SW 26 ST
SW 36 ST
CARNAHAN·PROCTOR·CROSS, INC.
CONSULTING ENGINEERS · SURVEYORS · PLANNERS
ISLES OF WESTON
ZONING MAP
FIGURE 3
FILE NO. 980307
SHEET 1 OF 1
SEAL

LEGAL DESCRIPTION

PARCEL I;
ALL OF THE SOUTH ONE-HALF (S,1/2) OF THE SOUTHWEST ONE-QUARTER (SW1/4) OF SECTION 24, TOWNSHIP 50 SOUTH, RANGE 39 EAST, BROWARD COUNTY, FLORIDA

PARCEL II;
ALL OF THE NORTHWEST ONE-QUARTER (NW1/4) OF SECTION 25, TOWNSHIP 50 SOUTH, RANGE 39 EAST, BEING ALL OF TRACTS 17 THROUGH 32, INCLUSIVE, TOGETHER WITH THOSE CERTAIN 15 FOOT ROAD RESERVATIONS LYING ADJACENT THERETO, FLORIDA FRIUT LANDS CO. SUBDIVION NO. 1, ACCORDING TO THE PLAT THEREOF RECORDED IN PLAT BOOK 2, PAGE 17, OF THE PUBLIC RECORDS OF MIAMI-DADE COUNTY, FLORIDA. SAID LANDS SITUATE, LYING AND BEING IN BROWARD COUNTY, FLORIDA.

PARCEL III;
ALL THAT PORTION OF THE SOUTHWEST ONE-QUARTER (SW1/4) OF SAID SECTION 25, TOWNSHIP 50 SOUTH, RANGE 39 EAST, LYING NORTH OF THE NORTH RIGHT-OF-WAY LINE OF THE SOUTH NEW RIVER CANAL (C-11), AS DESCRIBED IN OFFICIAL RECORDS BOOK 6256, AT PAGE 381, OF THE PUBLIC RECORDS OF BROWARD COUNTY, FLORIDA, BEING ALL OF TRACTS 37, 38, 39, 40, 41 AND 42 AND PORTIONS OF TRACTS 43, 44 54, 55 AND 56, TOGETHER WITH THOSE CERTAIN 10 FOOT ROAD RESERVATIONS LYING ADJACENT THERETO, EVERGLADES LAND SALES CO. SUBDIVISION, ACCORDING TO THE PLAT THEREOF RECORDED IN PLAT BOOK 1, AT PAGE 63, OF THE PUBLIC RECORDS OF MIAMI-DADE COUNTY, FLORIDA. SAID LANDS SITUATE, LYING AND BEING IN BROWARD COUNTY, FLORIDA

PARCEL IV;
ALL OF THAT PORTION OF THE NORTHEAST ONE-QUARTER (NE1/4) OF SAID SECTION 25, TOWNSHIP 50 SOUTH, RANGE 39 EAST, LYING NORTHWESTERLY OF WINDMILL LAKE ESTATES, ACCORDING TO THE PLAT THEREOF RECORDED IN PLAT BOOK 141, PAGE 5, OF THE PUBLIC RECORDS OF BROWARD COUNTY, FLORIDA, AND SOUTH OF ROSEWOOD SHORES, ACCORDING TO THE PLAT THEREOF RECORDED IN PLAT BOOK 157, AT PAGE 28, OF THE PUBLIC RECORDS OF BROWARD COUNTY, FLORIDA, BEING PORTIONS OF TRACTS 15 AND 16, TOGETHER WITH THOSE CERTAIN 15 FOOT ROAD RESERVATIONS LYING ADJACENT THERETO, OF SAID FLORIDA FRIUT LANDS CO. SUBDIVISION NO. 1, ACCORDING TO THE PLAT THEREOF RECORDED IN PLAT BOOK 2, AT PAGE 17, OF THE PUBLIC RECORDS OF MIAMI- DADE COUNTY, FLORIDA. SAID LANDS SITUATE, LYING AND BEING IN BROWARD COUNTY, FLORIDA.

TOTAL AREA=328.0 ACRES.

FIGURE 4

GULFSTREAM
WESTON, FLORIDA

FIGURE 5

CARNAHAN•PROCTOR•CROSS, INC

TOTAL SITE AREA 328.00 AC.
RESIDENTIAL AREA 118.65 AC.
LAKES W/ L.M.E. 63.85 AC.
CONSERVATION AREA 63.27 AC.
INTERNAL ROADWAYS 33.81 AC.
GREEN SPACE/ BUFFERS 20.56 AC.
SCHOOL SITE 7.00 AC.
PUBLIC PARK 5.00 AC.
RECREATION AREA 6.10 AC.
ARCH SITE 0.51 AC.
36TH ST./ VISTA PK. R.O.W. 9.25 AC.
CONSERVATION AREA 58.54 AC.
CONSERVATION AREA 4.73 AC.
SCHOOL SITE 7.0 AC.
CITY PARK 5.0 AC.
SW 36TH STREET
LAKE 9.20 AC.
ARCH SITE
LAKE 14.76 AC.
REC. AREA 6.10 AC.
LAKE 9.20 AC.
LAKE 10.75 AC.
LAKE 15.89 AC.
LAKE 3.67 AC.
C-11 CANAL
SATELLITE/CABLE FACILITY
LAND USE: AGRICULTURAL ZONING: A-1
LAND USE: AGRICULTURAL ZONING: A-2
LAND USE: EMPLOYMENT CENTER ZONING: POD
ZONING: POD
VISTA PARK BLVD.
CARNAHAN·PROCTOR·CROSS, INC.
CONSULTING ENGINEERS · SURVEYORS · PLANNERS
ISLES AT WESTON
MASTER DEVELOPMENT PLAN
FIGURE 6
FILE NO. 980307
SHEET 1 OF 1
SEAL
REVISE CONSERVATION AREA BOUNDARY
REVISE PER SITE PLAN CHANGES PER CITY COMMENTS

CONSERVATION AREA 58.54 AC.
CONSERVATION AREA 4.73 AC.
SCHOOL SITE 7.0 AC.
CITY PARK 5.0 AC.
PERVIOUS & GREEN SPACE AREAS 90.19 ACRES
LAKES & L.M.E. 63.85 ACRES
RECREATION AREA 6.10 ACRES
SW 381H STREET
WESTON PARK BLVD
LAKE 14.76 AC.
LAKE 9.20 AC.
LAKE 10.75 AC.
LAKE 15.89 AC.
LAKE 3.67 AC.
REC. AREA 6.10 AC.
6.20 AC.
ARCH SITE
TOTAL PERVIOUS/GREENSPACE AREA = 90.19 ACRES
CARNAHAN·PROCTOR·CROSS, INC.
CONSULTING ENGINEERS · SURVEYORS · PLANNERS
ISLES AT WESTON
PERVIOUS AND GREENSPACE
FIGURE 7
FILE NO. 980357
SHEET 1 OF 1
REVISE CONSERVATION AREA BOUNDARY
REVISE PER SITE PLAN CHANGES PER CITY COMMENTS

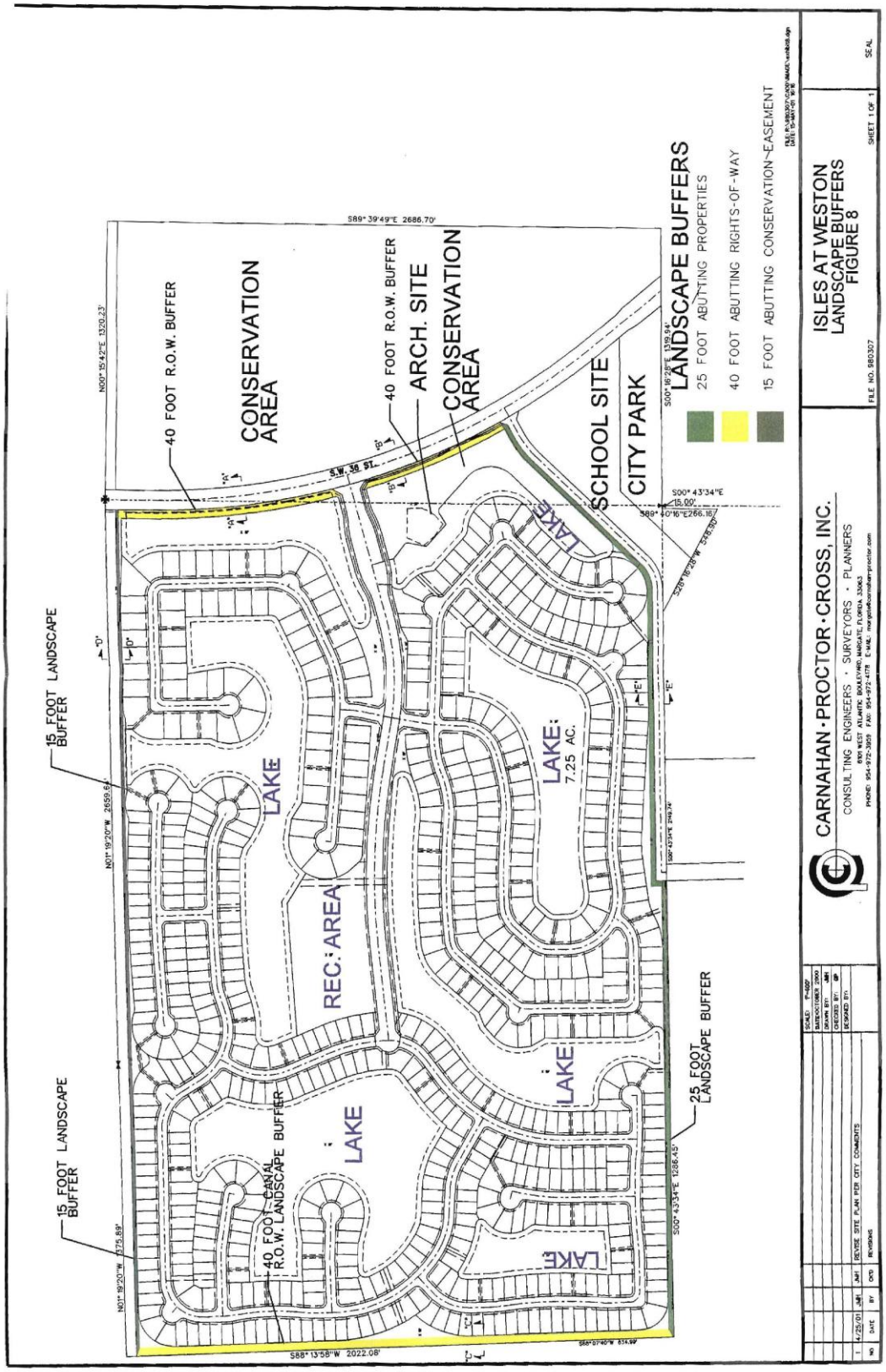
LANDSCAPE BUFFERS
25 FOOT ABUTTING PROPERTIES
40 FOOT ABUTTING RIGHTS-OF-WAY
15 FOOT ABUTTING CONSERVATION-EASEMENT
ISLES AT WESTON
LANDSCAPE BUFFERS
FIGURE 8
FILE NO. 880307
SHEET 1 OF 1
SEAL
CARNAHAN·PROCTOR·CROSS, INC.
CONSULTING ENGINEERS · SURVEYORS · PLANNERS
6301 WEST ATLANTIC BOULEVARD, MARGATE, FLORIDA 33063
PHONE: 954-972-3929 FAX: 954-972-4778 E-MAIL: margate@carnaharnproctor.com
SCALE: 1"=60'
DATE: 10/19/00
DRAWN BY: MH
CHECKED BY: MP
DESIGNED BY:
1 4/25/01 JMR REVISE SITE PLAN PER CITY COMMENTS
NO DATE BY CKD REVISIONS
S89° 39'49"E 2686.70'
N00° 15'42"E 1320.23'
40 FOOT R.O.W. BUFFER
CONSERVATION AREA
40 FOOT R.O.W. BUFFER
ARCH. SITE
CONSERVATION AREA
SCHOOL SITE
CITY PARK
S.W. 38 ST.
S00° 16'28"E 1326.94'
S00° 43'34"E
15.00'
S89° 40'16"E 266.16'
S26° 16'28"W 546.80'
15 FOOT LANDSCAPE BUFFER
N01° 19'20"W 2659.6'
LAKE
REC. AREA
LAKE
LAKE: 7.25 AC.
LAKE
LAKE
LAKE
S00° 43'34"E 249.74'
25 FOOT LANDSCAPE BUFFER
15 FOOT LANDSCAPE BUFFER
N01° 19'20"W 1375.88'
40 FOOT CANAL R.O.W. LANDSCAPE BUFFER
S00° 43'34"E 1286.45'
S88° 13'58"W 2022.08'

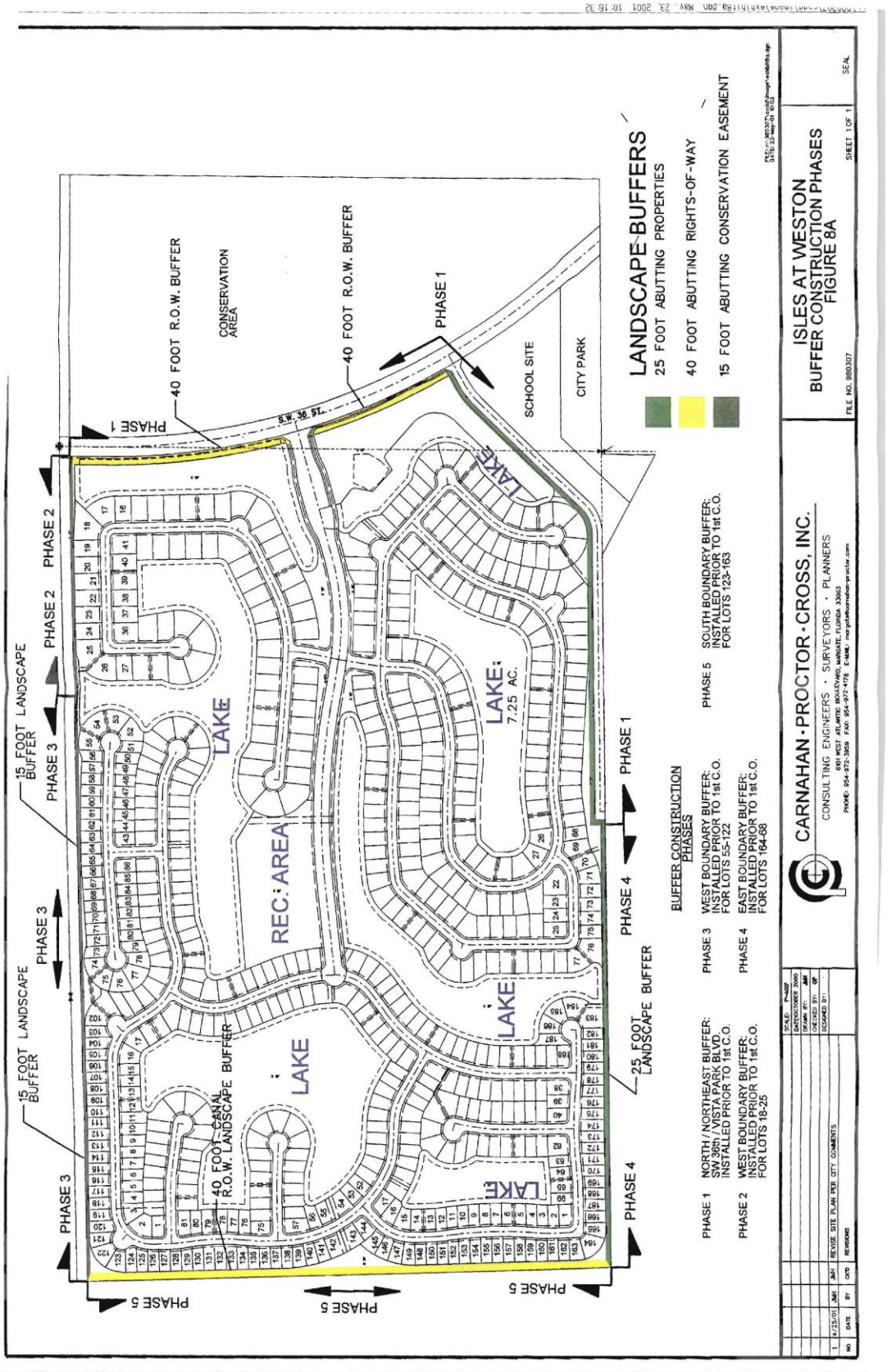
40 FOOT R.O.W. BUFFER
CONSERVATION AREA
40 FOOT R.O.W. BUFFER
PHASE 1
SCHOOL SITE
CITY PARK
S.W. 36 ST.
LANDSCAPE BUFFERS
25 FOOT ABUTTING PROPERTIES
40 FOOT ABUTTING RIGHTS-OF-WAY
15 FOOT ABUTTING CONSERVATION EASEMENT
ISLES AT WESTON
BUFFER CONSTRUCTION PHASES
FIGURE 8A
FILE NO. 980307
SHEET 1 OF 1
SEAL
15 FOOT LANDSCAPE BUFFER
PHASE 3
PHASE 2
PHASE 1
PHASE 4
PHASE 5
LAKE
REC. AREA
LAKE: 7.25 AC.
40 FOOT CANAL R.O.W. LANDSCAPE BUFFER
25 FOOT LANDSCAPE BUFFER
BUFFER CONSTRUCTION PHASES
PHASE 1 NORTH / NORTHEAST BUFFER: SW 36th / VISTA PARK BLVD. INSTALLED PRIOR TO 1st C.O.
PHASE 2 WEST BOUNDARY BUFFER: INSTALLED PRIOR TO 1st C.O. FOR LOTS 18-25
PHASE 3 WEST BOUNDARY BUFFER: INSTALLED PRIOR TO 1st C.O. FOR LOTS 55-122
PHASE 4 EAST BOUNDARY BUFFER: INSTALLED PRIOR TO 1st C.O. FOR LOTS 164-68
PHASE 5 SOUTH BOUNDARY BUFFER: INSTALLED PRIOR TO 1st C.O. FOR LOTS 123-163
CARNAHAN · PROCTOR · CROSS, INC.
CONSULTING ENGINEERS · SURVEYORS · PLANNERS
REVISE SITE PLAN PER CITY COMMENTS

SINGLE FAMILY LANDSCAPE DATA TABLE
CITY OF WESTON CODE AND ZONING
LANDSCAPE SPECIFICATION FOR SINGLE FAMILY/DUPLEX DWELLINGS
(to be attached to each set of permit plans)
to be filled out by owner or authorized landscape specialist

Permit # _____ Lot: Block: Address:

_____ Total Site Area (sq. ft.)

_____ Impervious Area (sq. ft.)

_____ Pervious Area (sq. ft.) ÷ 50 =

_____ Required Plant Units ÷ 20 =

_____ Required Trees (20% max palms)

_____ Required Street Trees

_____ Required Shrubs (½ of Plant Units)

_____ Required 20% Xeriscape (sq. ft.)

_____ Excl. Lake Maint. Esmt. (sq. ft.)

_____ Required Xeriscape Shrubs/G.C.

_____ Turf Provided (max 80%)

SPECIES	QTY.	SIZE	NATIVE (50%) (y/n)	DROUGHT TOLERANCE (no. mod. Ver.

APPROVAL: _____ DATE: _____

1. Minimum tree height 12 ft. height x 6' spread/FL Grade #1 material/2½" caliper, 4½' C.T.
2. Minimum palm tree height 20' O.A. with 7' wood. No more than 20% of required trees.
3. Street trees are in addition to the required trees at – 35' O.C. Street trees must be designated on chart.
4. A minimum of 20% of pervious area of site must be in xeriscape landscape, with the use of ground cover shrubs area mulches designed to have 50% minimum coverage of installation and 100% coverage within 6 months of installation, using drought tolerance species. Required shrubs may be added to the xeriscape requirement if drought tolerant species are utilized.
5. Maximum of 80% of pervious area can be in turfgrass (St. Augustine 'Floratam') excluding the lake maintenance easement.
6. 50% native plant material required (shrub & tree).
7. Minimum 2 trees are required in front yard.
8. Mechanical equipment must be screened with 30" height hedge material.
9. Topsoil required for 6" around and beneath rootball of all trees and shrubs/composed of 30% muck or horticulturally acceptable organic material.
10. 3" mulch required a minimum of 18" beyond all plantings. Guy and stake all trees.
11. Tree survey required where existing trees exist on site.
12. If irrigation system is installed, rain sensor device required.
13. Invasive species list is enforced.
14. No landscape inspection will be approved until entire site is completed.
15. Upon completion of project – Landscape maintenance must be complied with.

Signature of Agent/Owner: _____ Date: _____

FIGURE 9

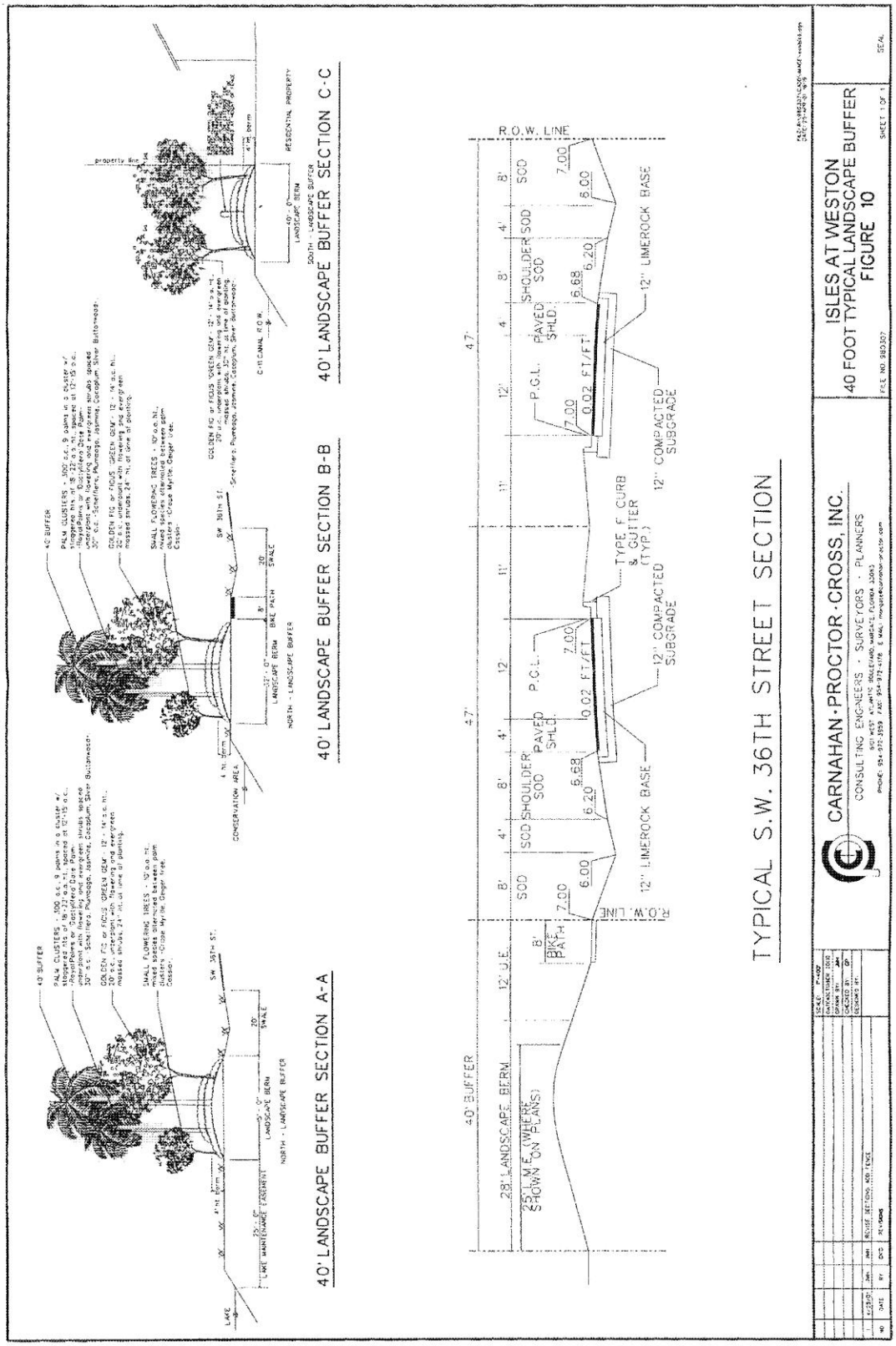
40' LANDSCAPE BUFFER SECTION A-A
40' LANDSCAPE BUFFER SECTION B-B
40' LANDSCAPE BUFFER SECTION C-C
TYPICAL S.W. 36TH STREET SECTION
CARNAHAN·PROCTOR·CROSS, INC.
CONSULTING ENGINEERS · SURVEYORS · PLANNERS
ISLES AT WESTON
40 FOOT TYPICAL LANDSCAPE BUFFER
FIGURE 10

CARNAHAN · PROCTOR · CROSS, INC.
CONSULTING ENGINEERS · SURVEYORS · PLANNERS
6101 WEST ATLANTIC BOULEVARD, MARGATE, FLORIDA 33063
PHONE: 954-972-3959 FAX: 954-972-4178 E-MAIL: margate@carnahan-proctor.com

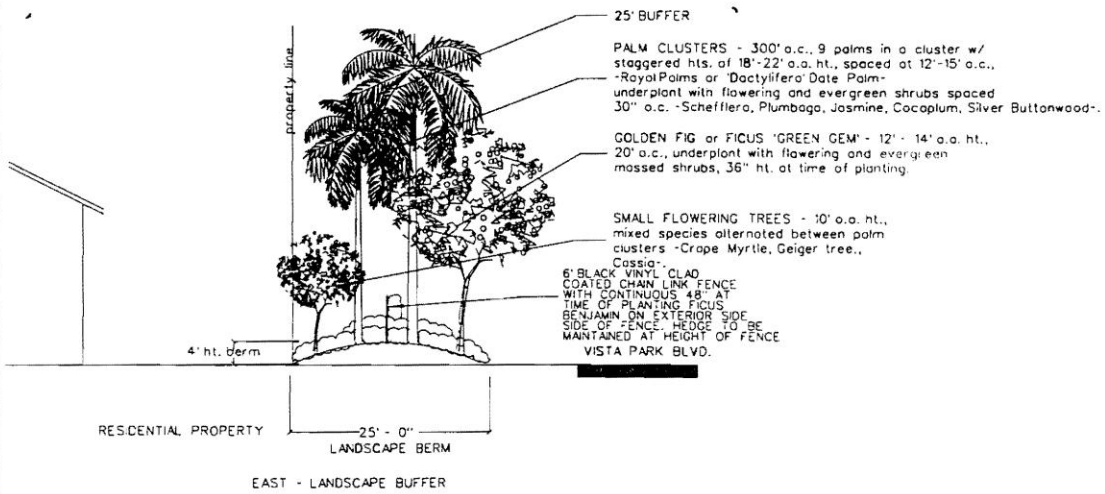

25' LANDSCAPE BUFFER SECTION E-E

FIGURE 11

JOB NO.	980307	DWG BY:	JMH	SCALE:	N/A	SECTION E-E
	ISLES AT WESTON	CK'D By:	JMH	DATE:	MARCH 2001	SHEET 1 OF 1 SHEETS

FILE: R:\980307\CADD\EXHIBIT9.DGN

CARNAHAN • PROCTOR • CROSS, INC.
CONSULTING ENGINEERS · SURVEYORS · PLANNERS
6101 WEST ATLANTIC BOULEVARD, MARGATE, FLORIDA 33063
PHONE: 954-972-3959 FAX: 954-972-4178 E-MAIL: margate@carnahan-proctor.com

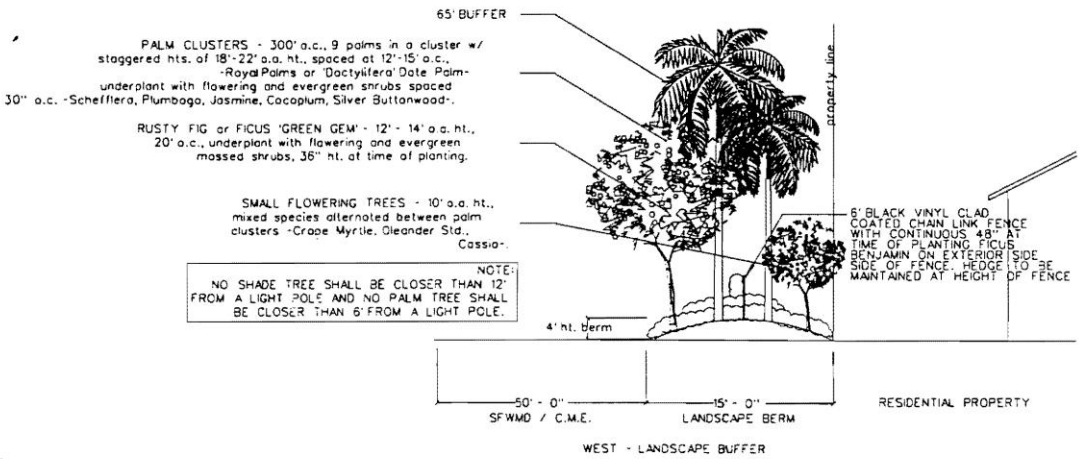

15' LANDSCAPE BUFFER SECTION D-D

FIGURE 12

JOB NO.	980307	DWG BY:	JMH	SCALE:	N/A	SECTION D-D
	ISLES AT WESTON	CK'D By:	JMH	DATE:	MARCH 2001	SHEET 1 OF 1 SHEETS

FILE: R:\980307\CADD\EXHIBIT9.DGN

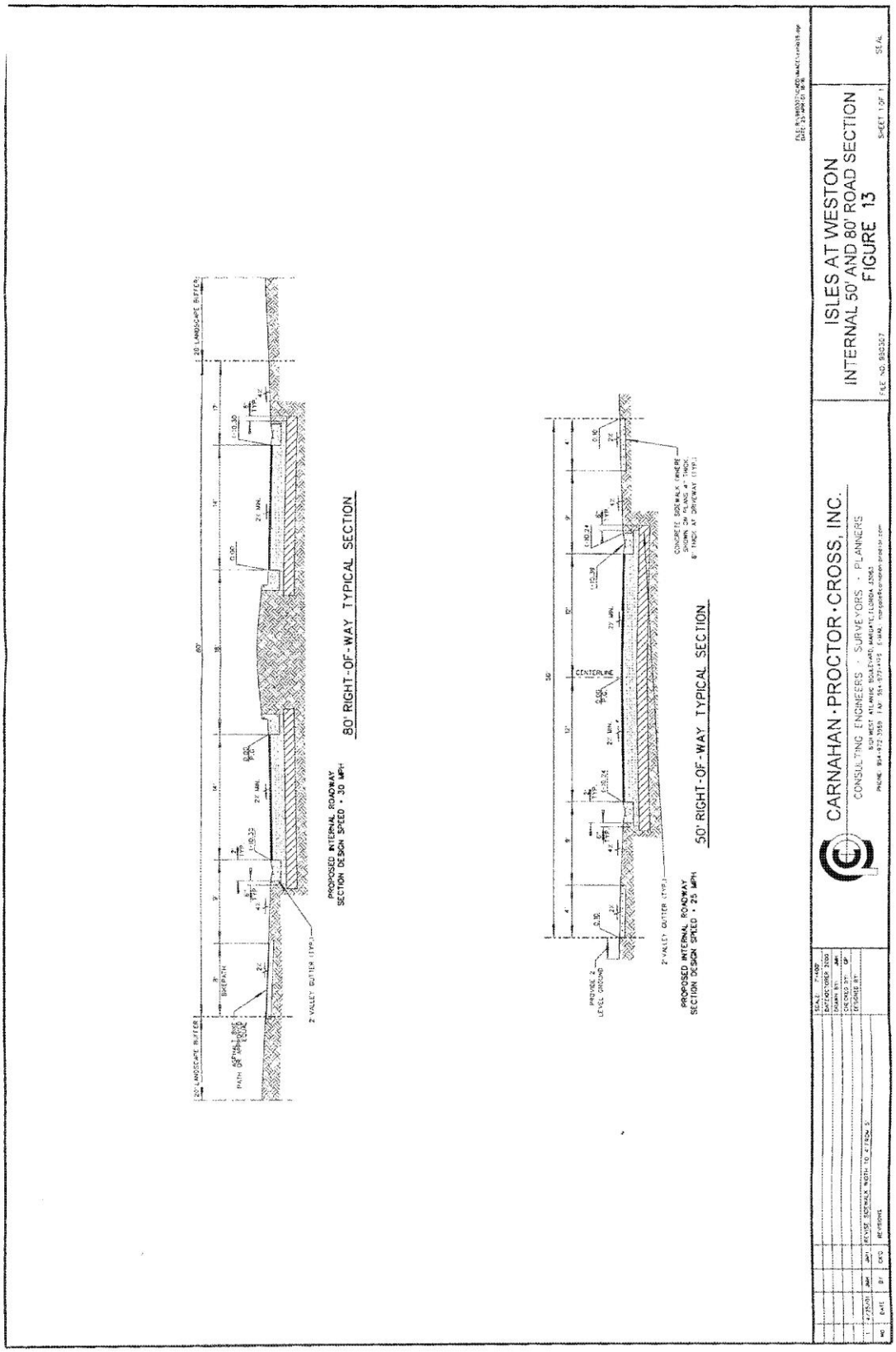
80' RIGHT-OF-WAY TYPICAL SECTION
PROPOSED INTERNAL ROADWAY
SECTION DESIGN SPEED = 30 MPH
50' RIGHT-OF-WAY TYPICAL SECTION
PROPOSED INTERNAL ROADWAY
SECTION DESIGN SPEED = 25 MPH
CARNAHAN·PROCTOR·CROSS, INC.
CONSULTING ENGINEERS · SURVEYORS · PLANNERS
ISLES AT WESTON
INTERNAL 50' AND 80' ROAD SECTION
FIGURE 13

AMENITY CENTER

NOTE:
THIS PLAN IS CONCEPTUAL ONLY

CENTEX HOMES
8198 JOG ROAD, SUITE 200
BOYNTON BEACH, FL 33437

ISLES at WESTON

FIGURE 14A

CLUBHOUSE
FRONT ELEVATION

CENTEX HOMES
8199 JOG RD. SUITE 200
BOYNTON BEACH, FL 33437

ISSUE DATE: 1986/1040
REVISION: FEB. 22, 2001

ISLES at WESTON

FIGURE 14B

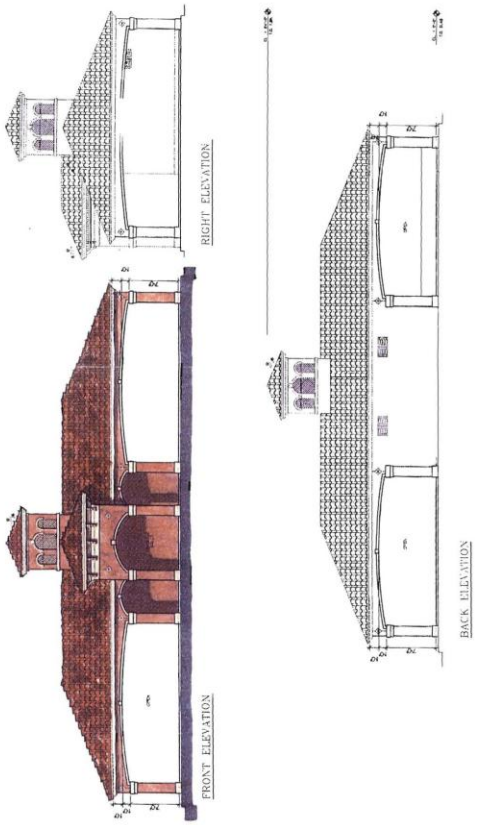

CABANA BUILDING

CENTEX HOMES

ISLES at WESTON

FIGURE 14C

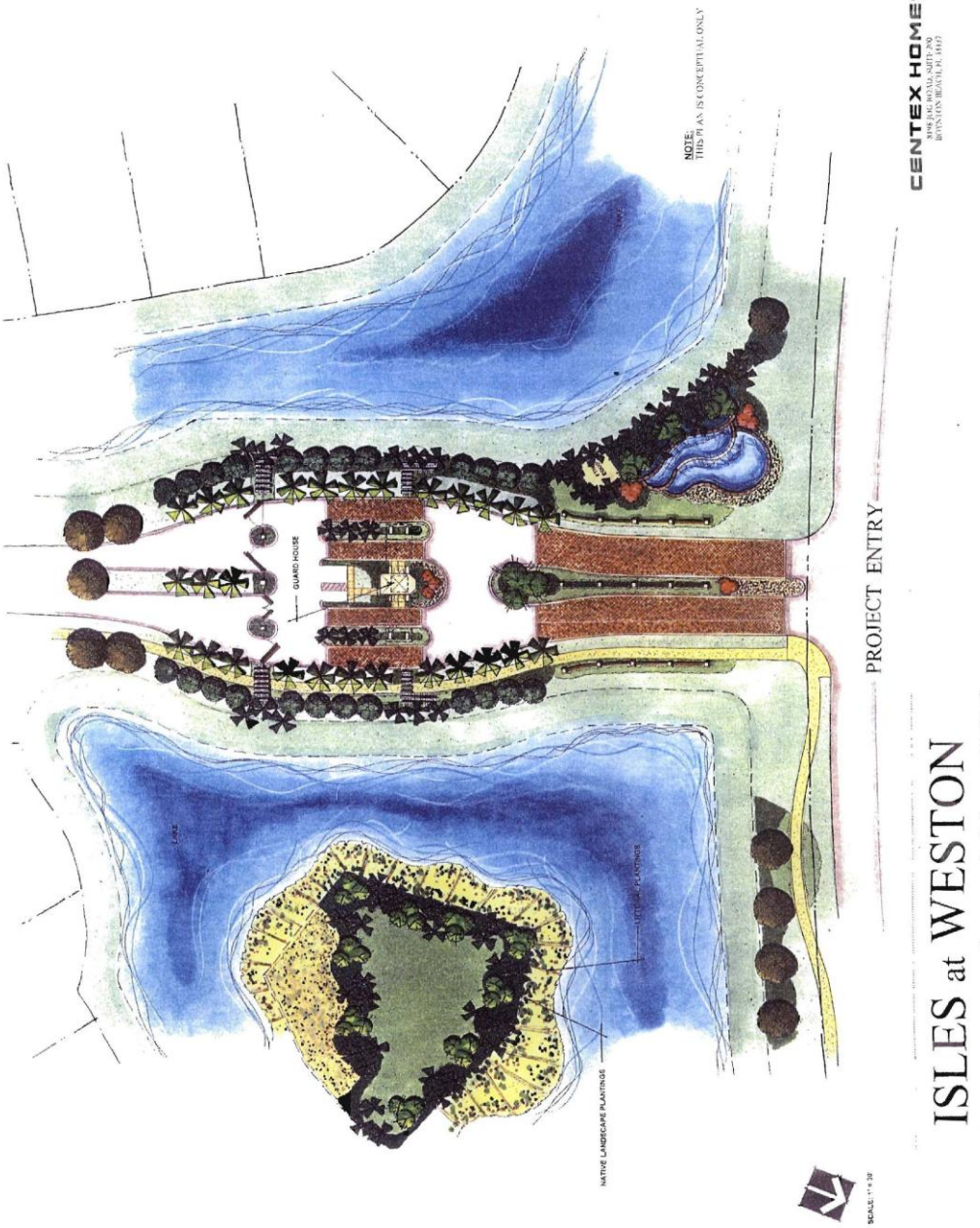
GUARD HOUSE
LAKE
NATIVE LANDSCAPE PLANTINGS
NOTE:
THIS PLAN IS CONCEPTUAL ONLY
PROJECT ENTRY
CENTEX HOMES
ISLES at WESTON

FIGURE 15A

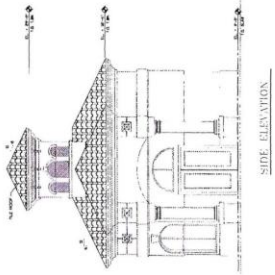

GUARDHOUSE

CENTEX HOMES

ISLES at WESTON

FIGURE 15B

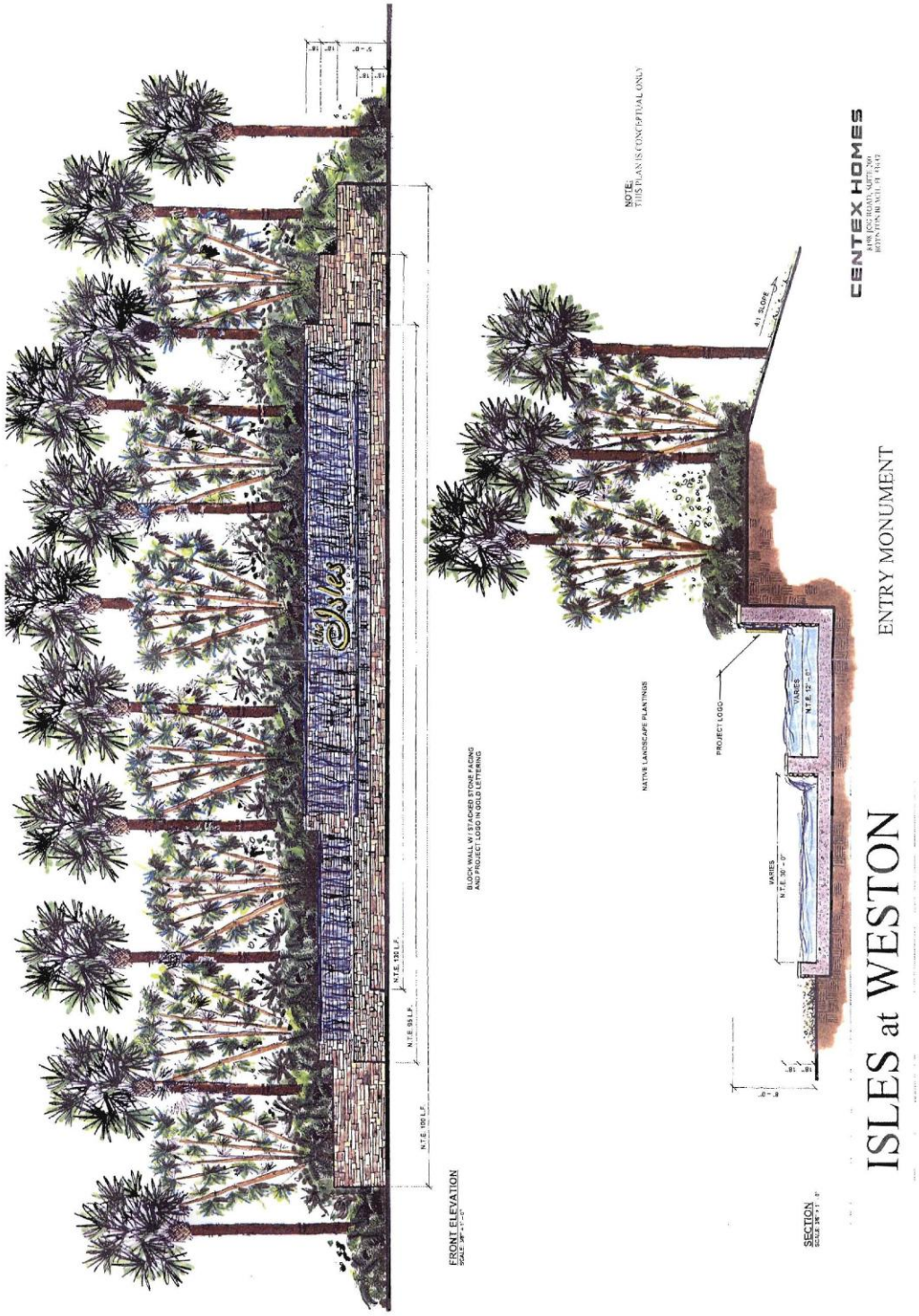
FRONT ELEVATION
BLOCK WALL W/ STACKED STONE FACING AND PROJECT LOGO IN GOLD LETTERING
NATIVE LANDSCAPE PLANTINGS
NOTE:
THIS PLAN IS CONCEPTUAL ONLY
CENTEX HOMES
PROJECT LOGO
VARIES
SECTION
ENTRY MONUMENT
ISLES at WESTON

FIGURE 15C

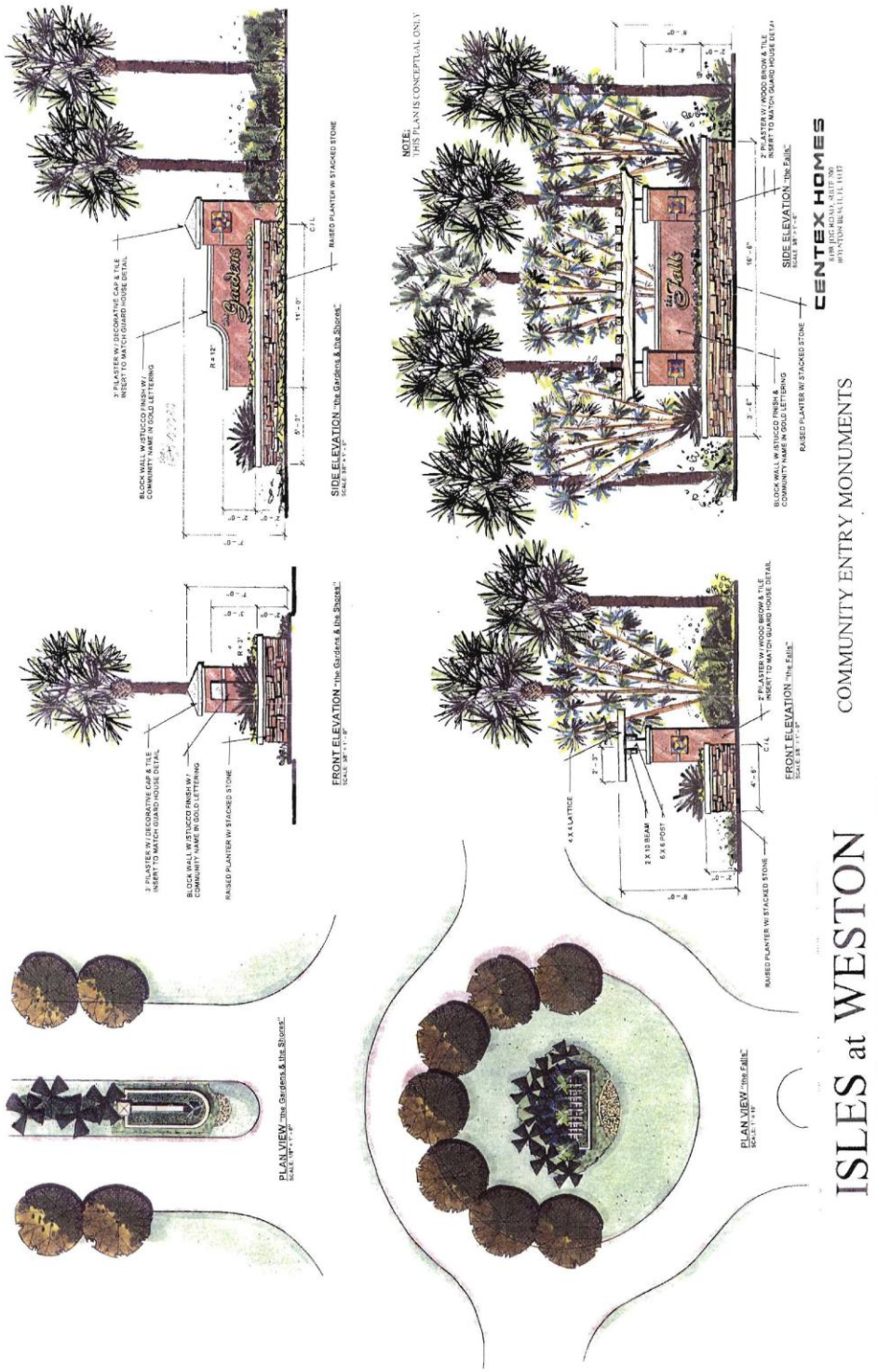
3' PILASTER W/ DECORATIVE CAP & TILE INSERT TO MATCH GUARD HOUSE DETAIL
BLOCK WALL W/STUCCO FINISH W/ COMMUNITY NAME IN GOLD LETTERING
RAISED PLANTER W/ STACKED STONE
SIDE ELEVATION "the Gardens & the Shores"
NOTE: THIS PLAN IS CONCEPTUAL ONLY
2' PILASTER W/ WOOD BROW & TILE INSERT TO MATCH GUARD HOUSE DETAIL
SIDE ELEVATION "the Falls"
CENTEX HOMES
FRONT ELEVATION "the Gardens & the Shores"
FRONT ELEVATION "the Falls"
4 X 4 LATTICE
2 X 10 BEAM
6 X 6 POST
PLAN VIEW "the Gardens & the Shores"
PLAN VIEW "the Falls"
COMMUNITY ENTRY MONUMENTS
ISLES at WESTON

FIGURE 15I

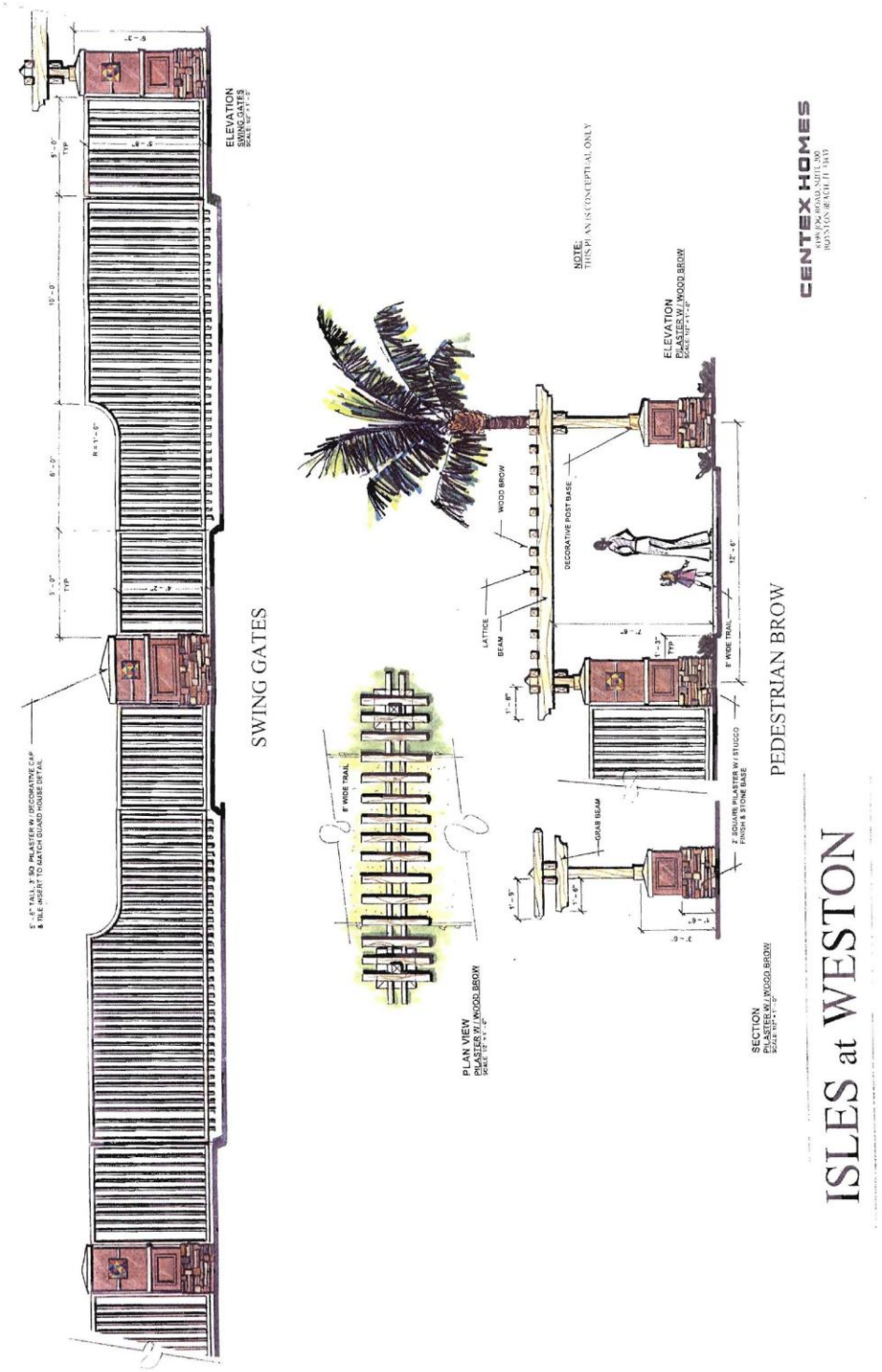
ELEVATION
SWING GATES
SCALE: 1/4"=1'-0"
SWING GATES
PLAN VIEW
PILASTER W/ WOOD BROW
SCALE: 1/4"=1'-0"
8' WIDE TRAIL
WOOD BROW
LATTICE
BEAM
DECORATIVE POST BASE
GRAB BEAM
NOTE:
THIS PLAN IS CONCEPTUAL ONLY
ELEVATION
PILASTER W/ WOOD BROW
SCALE: 1/4"=1'-0"
8' WIDE TRAIL
2' SQUARE PILASTER W/ STUCCO
FINISH & STONE BASE
SECTION
PILASTER W/ WOOD BROW
SCALE: 1/4"=1'-0"
PEDESTRIAN BROW
CENTEX HOMES
ISLES at WESTON

FIGURE 15

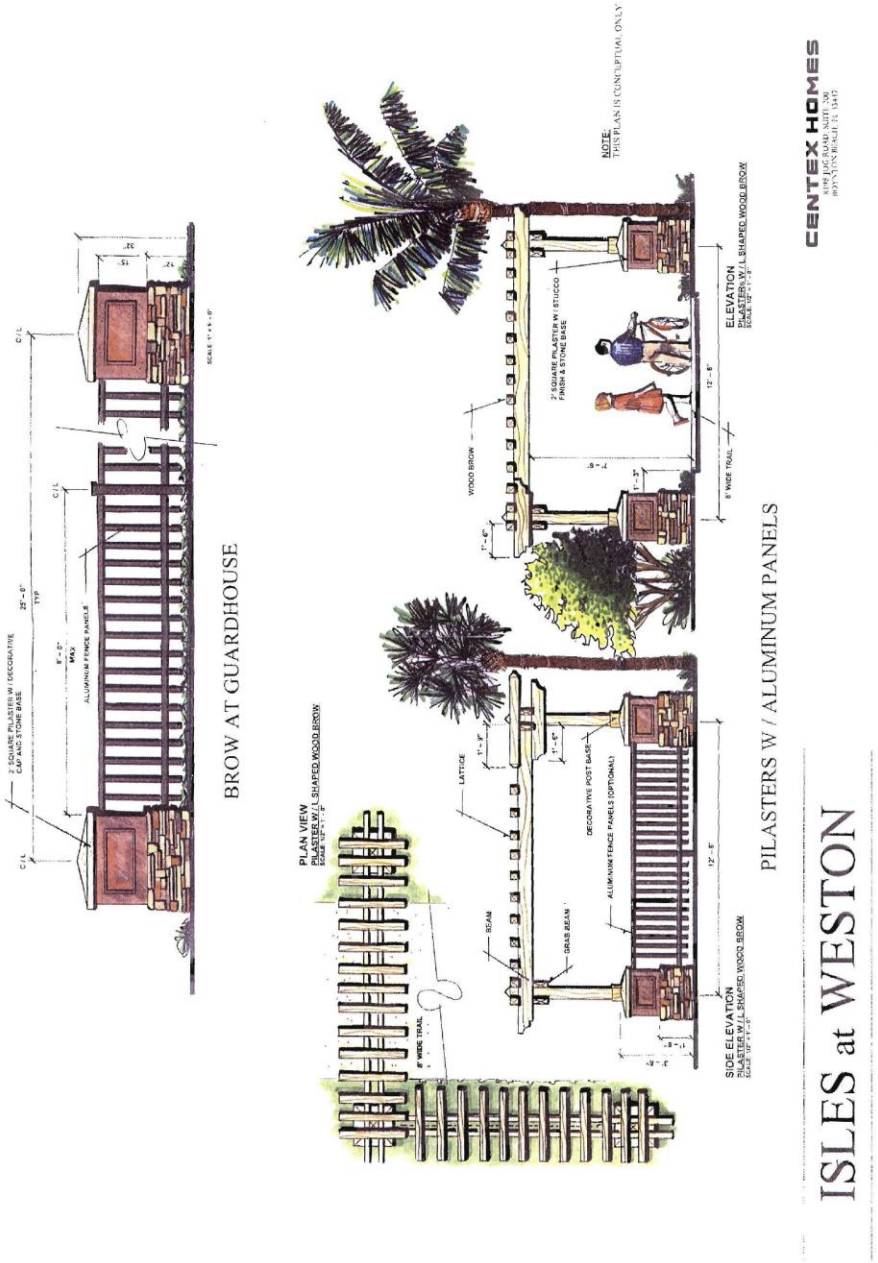
BROW AT GUARDHOUSE
PLAN VIEW
PILASTER W / L SHAPED WOOD BROW
SIDE ELEVATION
PILASTER W / L SHAPED WOOD BROW
ELEVATION
PILASTER W / L SHAPED WOOD BROW
NOTE:
THIS PLAN IS CONCEPTUAL ONLY
CENTEX HOMES
PILASTERS W / ALUMINUM PANELS
ISLES at WESTON

FIGURE 15

§ 124.28 FLORIDA NATURE AND CULTURE CENTER PLANNED DEVELOPMENT DISTRICT.

Development of property within the Florida Nature and Culture Center Planned Development District shall be governed by, and comply with, the Design Guidelines set forth below. Those aspects of the Development that are not regulated by the Design Guidelines shall be governed by the underlying zoning district provisions.

FLORIDA NATURE AND CULTURE CENTER

Weston, Florida

PDD DESIGN GUIDELINES
January 10, 2003

INTRODUCTION

The Florida Nature and Culture Center is a religious retreat and conference facility located one mile east of U.S. Highway 27 on S.W. 36th Street in the City of Weston. The entire site contains approximately 118.4 acres of land. The facility is a heavily landscaped, campus style complex comprised of twelve buildings that occupy less than three percent of the total site area. Of the total site area, approximately 60 acres has been preserved in a natural state as wetlands, grasslands and lake area, providing a habitat for numerous egrets, eagles, herons and other forms of native wildlife. The Culture Center recently invested more than one million dollars to further upgrade and enhance this preserve.

The campus is comprised of six primary common buildings, the tallest of which is 39 feet, with a spire or architectural feature that totals 54 feet in height. In addition, the campus features six ancillary structures that include five buildings containing visitor sleeping rooms and a caretaker's residence, as well as three miscellaneous buildings that include a pump room, guard house and gift shop/storage room. The campus also features an amphitheater that overlooks the lake that is located on the east side of the property. The overall site, outside of the natural preserve area, contains extensive landscaping with a variety of trees and shrubs. The entire complex, including all structures, setbacks, landscaping, parking, signage and any other development feature, as well as uses of structures, were constructed consistent with the applicable regulations in effect at the time of development and are considered legal and conforming. Any future development on the site shall conform with these design guidelines.

As a facility that provides a venue for religious activity, education, cultural exchange and meditation, the Florida Nature and Culture Center has been planned and developed to create harmony with the surrounding natural environment. As a result, the profile of the built environment is subdued, while natural vistas, vegetation, landscaping and pedestrian activities are emphasized to create a serene climate.

PERMITTED USES

The subject site is approved for use as retreat, education and conference facilities, including accessory facilities to support the primary uses. Accessory facilities include, but are not limited to, sanctuary, chapel, reception hall, conference center, dining hall, multi-purpose center, guest sleeping accommodations, caretaker's residence, guard house, storage area and gift shop.

TOTAL BUILDING SQUARE FOOTAGE

The campus currently contains approximately 150,000 square feet of primary common, ancillary and miscellaneous building area. The total of all existing and potential future building development on the site shall not exceed 257,928 square feet, which is only 5 percent of the entire site area.

MINIMUM OPEN SPACE

As open space is a key design feature that promotes the meditation qualities and nature center aspects of the Culture Center, a minimum of 50 percent of the gross site area shall be maintained in open space. Open space may include pedestrian paths, pedestrian plazas, active recreation areas, lakes and wetlands, but specifically excludes vehicular access areas or drive aisles, parking lots and roofed structures.

ARCHITECTURAL STYLE AND COLOR PALETTE

The predominant architecture of structures on the campus may be described as a Mediterranean theme. Primary common buildings feature pillared breezeways, façade relief, decorative banding and hip and gable roof styles. Ancillary buildings complement the predominant architectural scheme, and all buildings feature neutral wall colors. Visual variations and aesthetic enhancements include subdued red roofing and a variety of red brick pavers along the central promenade of the campus. Any future development on the site will be consistent and compatible with the existing style of development and current color palette that has been utilized.

MAXIMUM HEIGHT

The height of the tallest primary common building is 39 feet. The architectural feature totals 54 feet in height. Consistent with the existing development, therefore, future structures will not exceed 39 feet in height, and any future spire or architectural feature will not exceed 54 feet in height. Additionally, the height of any future fence or wall will not exceed the current height of such similar development features, which is a total of 10 feet.

SETBACKS: PRIMARY AND ACCESSORY STRUCTURES

All structural setbacks on the site will not be less than 25 feet, with the exception of fences or walls. Fences or walls may be located on the property line, subject to meeting traffic and engineering safety standards.

PARKING

Parking is dispersed throughout the developed portion of the campus. This not only makes parking more convenient for each of the campus buildings, but also de-emphasizes the visual impact of any parking area. A total of 563 parking spaces have been provided at the facility to serve the various primary common buildings and ancillary buildings. All future uses will conform with applicable parking regulations that may, with the approval of the City Commission, include shared parking per Section 158.40(G) of the Code of Ordinances.

LANDSCAPING AND BUFFERING

The Florida Nature and Culture Center is a unique development because it features a wetland preserve as well as serving as a nature center. The preserve, which is located along the east, south and a portion of the west side of the property, will remain in its natural state. The Culture Center has recently invested more than one million dollars in this preserve to upgrade and enhance it. This area will remain in its natural state and serves as an expansive and natural buffer and landscape area for other properties abutting it.

The balance of the site that does not abut the preserve, which is the north side and a portion of the west side, features gentle berming and extensive landscaping. Additionally, the interior of the site contains extensive landscaping, including specimen trees and shrubs that are tagged with identification and specie information, in keeping with the nature center aspect of the campus. The preserve and the existing landscaping and berming shall remain, and are considered consistent with and conforming to code requirements.

SIGNAGE

The hierarchy of signage includes facility identification, directional signs and traffic control signs. The Culture Center identification sign is contained within the entry wall feature located within the property at the entrance to the facility, as approved prior to construction. The directional signs contained within the complex, as approved prior to construction, guide motorists and pedestrians to the various buildings within the complex, while the traffic control signs, such as “stop signs” and “keep right” signs provide direction to motorists for safety purposes. Any additional signs that are proposed for the campus will be consistent and compatible with the general design, style and color scheme of the existing signage program; otherwise conforming to the sign regulations in effect at that time.

§ 124.29 ESTATES OF SWAN LAKE PLANNED DEVELOPMENT DISTRICT.

Development of property within the Estates of Swan Lake Planned Development District shall be governed by, and comply with, the Design Guidelines set forth below. Those aspects of the Development that are not regulated by the Design Guidelines shall be governed by the underlying zoning district provisions.

ESTATES OF SWAN LAKE

Weston, Florida

PDD DESIGN GUIDELINES
June 9, 2000

CCL Consultants, Inc.
CCL. *Project No. 3943-11*

TABLE OF CONTENTS

I. INTRODUCTION

II. APPLICANT/OWNER/DESIGN TEAM

III. EXISTING CONDITIONS

IV. GENERAL DATA

V. RELATIONSHIP TO THE COMPREHENSIVE PLAN

VI. MASTER DEVELOPMENT PLAN

VII. OPEN SPACE

VIII. TRAFFIC IMPACT ANALYSIS

TYPICAL INTERNAL 50′ ROAD SECTION (Provided with FIGURE IOC)

IX. UTILITIES

X. GRADING, EXCAVATION AND DRAINAGE

XI. LAND DEDICATION

XII. DESIGN DEVELOPMENT STANDARDS

(Design Development Criteria Table)

XIII. JOB SITE GUIDELINES

EXHIBITS

FIGURE 1	LOCATION MAP
FIGURE 2	LAND USE MAP
FIGURE 3	ZONING MAP
FIGURE 4	PROPOSED PLAT
FIGURE 5	LEGAL DESCRIPTION
FIGURE 6	SOIL SURVEY MAP
FIGURE 7	AERIAL
FIGURE 8	SECTION MAP
FIGURE 9	CONCEPTUAL MASTER PLAN EXHIBIT
FIGURE 9-A	PERVIOUS AND GREENSPACE EXHIBIT
FIGURE 9-B	LANDSCAPE BUFFERS EXHIBIT
FIGURE 9-C	SINGLE FAMILY LANDSCAPE DATA TABLE FORM
FIGURE 10-A	40′ TYPICAL LS/LME BUFFER SECTION
FIGURE 10-A1	40′ TYPICAL LANDSCAPE BUFFER SECTION
FIGURE 10-B	25′ TYPICAL LANDSCAPE BUFFER SECTION & EQUIPMENT SCREENING PLAN
FIGURE 10-C	15′ TYPICAL LANDSCAPE BUFFER SECTION

I. INTRODUCTION

The proposed site is located in the City of Weston and lies in Land Section 23 and Section 24, Township 50 South, Range 39 East. This planned development district (RD.D.) rezoning application is titled Estates of Swan Lake P.D.D. and was prepared by CCL Consultants, Inc. of Pompano Beach, Florida. The purpose of this rezoning is to define zoning regulations consistent with the City and County Land Use Designations and to demonstrate that the intended use of the parcel is in accordance with the City and County development goals and objectives.

The project consists of 94 dwelling units on an overall site of 239.38 acres, which provides a low-density development of one (1) unit per 2.55 acres. Of that acreage, approximately 93 will remain in conservation uses consisting of approximately 63 acres of wetland mitigation and 30 acres to be used as a water impoundment area and conveyed to South Florida Water Management District.

The remainder of the property will be developed with homesites, entry features, lakes, roads and buffer area. The lots will be generously sized twenty-seven one-acre lots, forty-seven half-acre lots, and twenty third-acre lots.

The residential portion of the property consists of two parcels separated by Southwest 36th Street (Subparcels). The twenty third-acre lots will be located on the Subparcel that is south of Southwest 36th Street. There will be a separate landscaped and gated entrance to each of the two Subparcels. This submittal is made in accordance with Ordinance No. 98-41 of the City of Weston Land Development Code.

II. APPLICANT/OWNER/DESIGN/TEAM

APPLICANT/OWNER:

Estates of Swan Lake, Corp.
6917 Collins Avenue
Miami Beach, FL 33141

Contact: Gregory Arnone
(305) 866-7272

AGENT:

Mathis & DeSanti Associates
2401 PGA Boulevard
Suite 280-D
Palm Beach Gardens, FL 33410

Contact: Chuck DeSanti
(561) 630-4877

ENGINEER:

CCL Consultants, Inc.
2200 Park Central Boulevard North
Suite 100
Pompano Beach, FL 33064

Contact: Richard C. Wohlfarth, P.E.
(954) 974-2200

III. EXISTING CONDITIONS

The proposed site contains approximately 239.38 acres of land which is currently vacant, with a portion a mining quarry and a tree farm. The site is generally located west of South Post Road, north of Windmill Ranch Estates, east of the Florida Fruit Lands Company's Subdivision and south of Southwest 26 Street. The location of the site is graphically shown on the location Map (see Figure 1). The property has a Land Use Designation of Agricultural and the Current Zoning is A-1 and P.U.D. See Figures 2 and 3 for the existing Land Use and Zoning Maps. See Figures 4 and 5 for a reduced copy of the proposed Plat and a copy of the Legal Description

Current and historical land uses of the property include tree farming, range land for cattle, limerock quarry, and creation of lots with house pads. Such uses have: allowed the proliferation of exotic and nuisance plant species; disturbed or eliminated natural soil profiles; altered the hydrology; and degraded historic wetlands. The degraded wetlands have been assessed by the Broward County Department of Planning and Environmental Protections (DPEP), the South Florida Water Management District (SFWMD) and the U.S. Army Corps of Engineers (ACOE). The evaluations

have established that a total of ±117.3 acres of mitigation is proposed to compensate for wetland impacts. Environmental regulatory permits are pending.

The Soil Survey of Broward County, Florida, Eastern Part, indicates that Lauderhill Muck was historically the primary soil type in the area with a minor component of Dania Muck (see Figure 6). In many areas the historic soil profile has been severely altered by past and present land uses. Both Lauderhill and Dania Muck are characterized as "nearly level, very poorly drained, organic soil underlain by limestone" at 20 to 40 inches and 14 to 20 inches, respectively.

The majority of the site is relatively flat with existing ground conditions generally varying from approximately 4.5′ NGVD to 5.5′ NGVD. Historically, activities pertaining to mining of the existing quarry site represent the only features having substantial topographical relief. Such features include the quarry, scrape down areas, soil and muck wetlands and berms, and several lot pads.

The project is located entirely within the Indian Trace Development District. Lake and canal easements within the project will be dedicated to either the City/Indian Trace Development District or remain with the Estates of Swan Lakes Homeowners' Association, whichever is appropriate.

Many of the Physical Features can be seen on the attached aerial from February 1998 (see Figure 7) Details of the adjacent area are shown on the Section Map (see Figure 8).

IV. GENERAL DATA

Location:	Weston, Florida
Proposed Zoning:	P.D.D.
Land Use:	Agricultural
Dwelling Units:	94 DU
Gross Acreage:	239,38 AC
Public Right-of-Way Dedication: (corner chord & turn lane)	1,948 S.F.
Conservation Area	93.32 AC
Lake Area: (including L.M.E.)	55.01 AC
Density:	1 DU /2.54 AG
Product Types:	No. of Units
One-Acre Lots:	27
Half-Acre Lots:	47
Third-Acre Lots:	20
	94 Units

V. RELATIONSHIP TO THE COMPREHENSIVE PLAN

The Broward County and City of Weston's Comprehensive Plans designate the Property as agricultural. Under both plans, property designated agricultural is allowed to be developed with residential uses at a density of one unit to two and one-half acres. The units are allowed to be clustered if:

(1) the parcel is development under a unified development plan;

(2) the areas from which density is transferred are relinquished of the right to be developed: and

(3) the arrangement of dwelling units conforms to locally established development standards.

The approval of this PDD would comply with those requirements.

VI. MASTER DEVELOPMENT PLAN

The Master Development Plan for the Property is shown in Figure 9. The project as proposed, consists of a residential component of 94 single family homes and a conservation component that consists of 93.32 acres of mitigation and water impoundment area.

A. Residential Component

The residential program is divided into three residential elements. Housing types to be one to three story detached single family units with garages and accessory buildings, as permitted by the City's Land Development Code. The single family Homes are designed to provide approximately 1.0 acre lots (None-Acre Lots"), approximately % acre lots ("Half-Acre Lots"), and the approximately % acre lots ("Third-Acre Lots") gross area.

The Conceptual Master Plan (see Figure 9) illustrates the configuration and land use of the P.D.D. The land use program is as follows:

	ACREAGE	**D.U.**
One-Acre Lots	27.91 AC	27
Half-Acre Lots	36.09 AC	47
Third-Acre Lots	7.98 AC	20
Open Space		
• Common Areas	13.39 AC	
• Lakes	42.43 AC	
• Conservation Area (includes perimeter berm)	97.42 AC	
Roadways (Private)	14.16 AC	-
TOTAL	**239.38 AC**	**94**

B. **Conservation Component**

The 93.32 acres of land within the conservation component will consist of a wetland mitigation area and a water preservation area. This property will be subject to restrictive

covenant that limit the uses of the property and that prohibit any residential units on these conservation areas.

The uses permitted in the Water Preserve Areas included the following:

1. Creation, enhancement or restoration of wetlands, and the establishment of public or private mitigation banks.
2. Surface impoundments that store water at depths not to exceed 12 feet and which are consistent with the Study.
3. Construction and operation of water control structures. Structures required for this purpose may include berms, dikes, levees and pumps.
4. Construction and operation of passive water quality treatment facilities. Areas required to provide surge basins to hold water awaiting treatment are also allowed.
5. Structures designed to promote the storage of water underground, which may include aquifer storage and recovery systems, pumps designed to promote groundwater recharge, and seepage management features, which may include curtain wall or other types of technology.
6. Water conveyance facilities or structures.
7. Public recreational uses to the extent that they do not interfere with the primary functions of the water preserve areas as established through the Water Preserve Area feasibility Study.

Modification of Specifically Delineated Lot Lines

The Developer shall have the right to assemble the planed building lots into larger lots by combining two lots or by combining one lot with a portion of another lot. In the case of such assemblages a unity of title shall be provided to the City for the enlarged lot area. Where a lot is combined with a portion of another lot, the remaining portion of subdivided lot shall be combined with the adjacent lot so that two enlarged lots are created from three lots and a unity of title shall be provided to the City for each of the Lots. No additional building lots or parcels (in total) shall be created by these modifications nor shall they result in lots smaller than the minimum lot dimensions within that development Subparcel.

VI. OPEN SPACE

A. Calculation of Open Space Exclusive of Lot Areas

The PDD contains a significant amount of open space consisting of the following:

Onsite mitigation	63.32 acres
Water Impoundment Area	30.00 acres
Perimeter Mitigation Berm	4.10 acres
Lake Area and Lake Maintenance area	51.68 acres
Landscape Buffer Areas and Landscaped Common Areas	13.39 acres
Total Open Space Provided (Exclusive of previous area within lots)	162.44 acres
Open Space Percentage	67.9%

B. Description of Open Space Components/Ownership

(1) The Onsite Mitigation area will consist of 63.32 acres of high quality wetlands, open water and buffer areas. The Property used for the mitigation area shall be subject to a conservation easement that requires the property to be maintained as a restored wetland. The Onsite Mitigation Area will either be conveyed to the Indian Trace Development District or the Estates of Swan Lake Homeowners Association (whichever is appropriate).

(2) The water impoundment area (WFA") shall be conveyed to SFVVMD and shall be restricted to water preserve area uses as described in Section VI. The WPA shall be subject to a declaration of restrictions that limits the uses of the WPA property to a surface water impoundment and ancillary facilities needed to support that use of the property.

(3) Lake area and Lake Maintenance Area shall be conveyed either to the Indian Trace Development District or the Estates of Swan Lake Homeowners Association (whichever is appropriate), to be used for water management for the Estates of Swan Lake Development.

(4) The Landscape Open Space and Buffer Areas shall be owned and maintained by the Estates of Swan Lake Homeowners Association and shall be designed in substantial conformity with the cross-sections shown in Figures 10-A and 10-B.

C. Lot Open Space

The overall open space within the lots will be a minimum of 40% resulting in approximately 28 acres of additional open space.

D. Ownership of Common Areas

The Landscape Open Space Common Areas together with the other common areas, including but not limited to, entry features, roadways, sidewalks, and utility easement areas shall be conveyed into the ownership of the Estates of Swan Lake Homeowners Association and shall be the maintenance obligation of that association. The Estates of Swan Lake Homeowners Association shall be created and the homeowners documents shall be placed of record prior to the conveyance of any of the residential lots.

VIII. TRAFFIC IMPACT ANALYSIS

The traffic concurrency issue is currently being addressed by Kimley-Horn & Associates, Inc. Recommendations with regard to traffic will be forthcoming in their report.

The minimum proposed roadway easement within the P.D.D. will be 50 feet. Sidewalks shall be provided on through streets as either one eight-foot (8) sidewalk or two five-foot (5′) sidewalks. See Figure 10-C for dimensions and detailed requirements.

IX. UTILITIES

Water and sewer for the project will be provided by the City of Weston. The project has the following existing utilities at the intersection of South Post Road and Southwest 36th Street:

1. 12″ D,I.P. watermain (W.M.) running north/south on the west side of South Post Road with a 10″ W.M. running west on the north side of Southwest 36th Street.

2. 16″ D.I.P. force main (F.M.) running north/south on the west side of South Post Road with a 8″ F.M. running west on the south side of Southwest 36th Street.

The on-site water system shall consist of a 8″ P.V.C. looped system to maintain water quality per BCHD rules and to provide adequate fire flow. The 8″ W.M. will tie into the existing 12″ W.M. along South Post Road and the 10′ W.M. along Southwest 36th Street. The sanitary sewer system shall consist of a 8″ P.V.C. gravity system from each unit to the proposed lift station for the project, which will then tie into the 16″ F.M. on South Post Road. The City of Weston is unsure as to how far the existing utilities run to the north along South Post Road; therefore, the City may require, and developer will provide extensions from Southwest 36th Street to the project's tie-in points for water and sewer, if necessary. No other extensions are proposed to be required or provided.

X. GRADING, EXCAVATION AND DRAINAGE

The proposed stormwater management system will consist of man-made lakes and a mitigation area hydraulically connected to the C-II canal via Ditch 3. The stormwater will be controlled to assure that the minimum roadway elevation is at or above the 10-year 1-day storm event and the finished floor elevations shall be constructed at an elevation higher than the 100-year 3-day storm stage. The primary drainage system will consist of catch basins and drainage pipe connected to the lake/canal system. The outfall catch basins will be provided with pollution control devices to mitigate the

point discharge of pollutants into the lake system. The water management system shall be designed to meet the criteria of the South Florida Water Management District and the City of Weston Water Control District.

The subsurface at this site generally consists of rock overlain with a layer of muck two (2) to four (4) feet thick. The rock in this area is normally very hard and difficult to excavate, it is anticipated that the rock will be blasted then excavated using conventional methods. Muck will be removed in lot and roadway areas and structural fill will be placed to bring these areas to grade.

The stormwater will be controlled to assure that the minimum roadway elevation is AT OR ABOVE THE GREATER OF 6.9 NG.V.D. and the 10-year 1-day storm event and the finished floor elevations shall be constructed at an elevation AT OR ABOVE THE GREATER OF 8.0 FEET N.G,V.D. and the 100-year 3-day storm stage.

XI. LAND DEDICATION

All roadways within the development will be private. The only public right-of-way dedication being proposed is the corner chord and right turn lane off South Post Road. "Land Dedication" and all modifications, dedications and vacation of utility, canal, landscape, lake maintenance easements and right-of-way vacations shall be made in accordance with the City of Weston Land Development Code and shall be handled concurrently with the plat, rezoning and site plan approval process.

The Developer proposes to dedicate to the Homeowners Association the private roadways and all other common areas within the P.D.D.

XII. DESIGN DEVELOPMENT STANDARDS

The development described within the P.D.D. shall comply with the regulations of Ordinance No. 98-41, the P.D.D. district of the Weston Land Development Code; as well as Ordinance No. 1999-13, lighting standards requirements; Ordinance No. 98-8, landscape standards; Ordinance No. 98-14, signage requirements, and all other applicable sections of the Code.

Typical building plans, floor plans and architectural elevations shall be subject to review during the building permit review process. The table which follows describes development criteria for the P.D.D.

ESTATES OF SWAN LAKE DESIGN DEVELOPMENT CRITERIA

Housing Type *1	Total Number Permitted	Lot Size *2	Mm. Lot Sq. Ft.	Mm. Lot Width *6	Mm. Lot Depth * 7	Mm. Lot Frontage	Mm. Home Sq. Ft. *3	Max Hgt. Ft. *4	Setbacks Front (Bldg.) Ft.	Front (Garage) Ft.	Rear Building) Ft.	Rear *(S/P)* Ft. *5	Side Ft.	Street Side Ft.
Acre	27		35,000	175′	235′	50′	4,500 s.f.	40′	45′	25′	50′	10′/5′	25′	25′
Half-Acre	47		15,000	125′	200′	50	3,500 s.f.	40′	35′	25′	25′	10′/5′	25′	25′
Third-Acre	20	90′x 130′	13,000	100′	133′	50′	2,500 s.f.	40′	25′	25′	15′	10′/5′	10′	16′

*** FOOTNOTES:**

1. If lot size is not specified above, design guidelines for most similar lot size will be utilized.
2. Platted and/or lot of sale.
3. Air conditioned living area.
4. Measured to peak of roof.
5. (S/P) = Screened enclosure setback/pool setback when not screen enclosed.
6. A minimum is measured as an average of the front and tear setbacks for irregularly shaped lot.
7. For pie shaped lots, the minimum depth may be reduced by not more than 40′; all other lot may be reduced to less than the minimum specified.

NOTE:

Signage, landscaping and irrigation requirements for each housing type will be provided in accordance with current or amended City of Weston Code.

Pool/Spa Regulation

Private swimming pools and in ground spas are permitted in the rear or side yards in the P.D.D. subject to the following standards:

1. The pool shall be located at least 5 feet from the rear or interior side property line and 5 feet from any portion of a building. Such setbacks shall be measured from the deck line or screening of the pools. If the proposed waterline is closer than five feet to the structure a structural engineer must include a letter or state on the plans that all precautions to protect the existing structure from failure shall be done by shoring, underpinning or any method as required. Closed indoor or covered swimming pools except in screening enclosed pools shall meet all yard requirements in the District for which the pool is located.
2. The entire pool shall be enclosed with a fence 5 feet in height minimum or open screen mesh enclosure which shall have a gate/door with a self locking/closing device which must be engaged when the pool is not in use. Any fence used must have less than a 4" gap between openings (from fence to grade per the South Florida Building Code). Hedges shall not satisfy the pool enclosure requirements.
3. All new residential swimming pools, spas, and hot tubs shall comply with CH 515, F.S., The "Preston de lbern/Mckenzie Merriam Residential Swimming Pool Safety Act" regarding pool safety requirements and options.

Signage Regulation

A. Intent

The objective of a quality signing and graphics program is to present a clear hierarchy of information, direction and organization. Conformity in style, materials and location of signage will be a major element in establishing the design theme continuity within the Estates of Swan Lake.

Signage must not conflict with any traffic control signs or be misleading, confusing or hazardous.

B. Sign Types

1. Permanent Signage:
   a. Main entry identification/feature
   b. Directional/informational
   c. House number signs
   d. Street identification signs
2. Temporary Signage
   a. Construction
   b. Future site

C. Signage Location and Size

The Applicant will be required by the Developer to identify and construct main entry signage to property, vehicular directional and regulatory signage as applicable to the site at the builder's own expense.

1. One freestanding identification, monument sign per street frontage which provides primary access to property, thirty-two square feet maximum area and eight foot maximum height, setback a minimum of 10 feet from adjacent property.
2. Vehicular directional/information sign locations and quantities within Applicant's property, six square feet maximum area and three feet maximum height.
3. House number signs shall be (3) inches in height and located on a mailbox or attached to the portion of the house facing and closest to the street so there is no unobstructed view of the house's numbers.
4. Street identification signs shall be installed prior to the issuance of the first building permit.
5. Construction signs shall only identify the name of the project under construction, or its owner, developer, planner, architect, engineer, builder or financier. There is to be one construction sign per construction site, a maximum of sixteen square feet and removed within five days of the date of the issuance of a Certificate of Occupancy.

D. Illuminated Signs

1. All sign structures are to be ground lighted.
2. Exposed outdoor neon signs and flashing or n-toying lighted signs are not acceptable.
3. Lighting fixtures shall comply with the overall design theme for the development.

E. Manufacturing and Installation

1. All signs must be submitted to the City for approval of materials, color, lettering and fabrication.
2. Sign fabricator shall provide a sample of the finish color and material of each sigh type for approval.
3. All units shall be constructed and installed in a workman-like manner.
4. The Applicant shall be responsible for the cost of designing, ordering, fabrication, construction, installation and maintenance of signs and graphics.

Lighting Regulation

All internal roadways shall have street lights installed similar to 'Windmill Ranch Estates providing a safe lighting environment while creating an attractive ambiance common to low-density development.

Landscape and Irrigation Regulation

LANDSCAPE:

A City of Weston Landscape Specification For Single Family Dwelling form shall be completed and submitted to the City for each individual lot (See Exhibit 9-C for example). The City of Weston reserves the right to amend this form. Therefore, contact the City for the most current Single Family Data Table form.

Street Trees:	1 Street Tree for approximately each 35 linear feet of right-of-way
Sod:	No more than 80% of the landscape areas will be sod. All pervious areas shall be landscaped with Flora tam sod and/or planting beds.
Screening Plants:	Plant material used for screening all above ground equipment shall be equal to the height of such elements.
Buffer Hedges:	Hedge plant material shall be maintained at a height of three (3) feet along abutting rights-of-way.
Site Lighting and Trees:	No Canopy Tree shall be located within 1 2 of a light pole and no Palm species within 6 of a light pole.
Native and Drought Tolerance:	Native and drought tolerance: 50% of required plant species shall be native arid drought tolerant.

ENTRANCE LANDSCAPE FEATURES:

Entrance landscape concepts will be designed around faux bridges and gate houses which have been set. The design will have a causeway feeling taking advantage of the water views. The completed concepts for all common areas will come back to City Staff for review.

IRRIGATION:

All landscape areas shall be served by a permanent irrigation system. Irrigation systems will be designed with separate zones to apply water onto tree and shrub areas less frequently than sod areas. All zones shall be designed to have 100% coverage with 100% overlap. Rain sensor switches shall be installed with automatic controllers.

XIII. JOB SITE GUIDELINES

A. Start of Construction

No lot clearing or placement of either sales and/or construction trailers, and portable toilets will be permitted until closing on the lot has occurred, all required governmental permits are obtained and formal written approval of the ARB has been granted.

B. Portable Toilets, Construction Trailers and Sales Trailers

Prior to commencing work, all temporary facilities must be placed on the job site and in a manner so as to least disturb other residents, other construction and the marketing of the community. Portable toilets shall be cleaned on a regular basis and shall not become noxious.

C. Construction Traffic

Parking of construction vehicles is prohibited on swales or grassy areas. Washing of vehicles on the streets is also prohibited. Construction parking is prohibited on public right-of-ways.

D. Construction Hours

The construction working hours shall be from 6:00 a.m. to 7:30 p.m. Monday through Friday, Saturday 7:00 a.m. to 530 p.m., Sunday 12:00 p.m. to 5:00 p.m. except on certain holidays. Additional hours may be provided upon approval of the ARB.

E. Site Clean-Up

All construction sites must be maintained in a neat and orderly fashion. Trash from construction work will be contained in a trash dumpster or removed from the job site on a routine basis. The Application is responsible for trash that blows off the site and shall retrieve such trash. There will not be stockpiling or dumping on streets or in the lakes, waterways or wetlands. Trash removed by the Developer will be billed to the responsible Applicant. Applicant will use only the utilities provided on the immediate site on which they are working.

F. Construction Damage

Any damage to streets and curbs, drainage inlets, sidewalks, street lights, street markers, mail boxes, walls, etc., will be repaired by the Applicant at its sole cost and its expense. If said damage is not repaired by the Applicant, the Developer may repair said damage and bill same to Applicant.

G. Established Speed Limit

The established speed limit within the Estates of Swan Lake is 25 miles per hour for construction vehicles, including light tracks and auto.

H. Construction Spillages

Operators of vehicles are required to clean up if spillage of a load occurs while within the Estates of Swan Lake. Clean-ups done by the Applicant at its sole cost and its expense. If said damage is not repaired by the Applicant, the Developer may repair said damage and bill same to Applicant.

I. Telephone (Cable TV Lines)

If any telephone, cable television, electrical, water, etc., lines are cut, it is the Participating Building's responsibility to report the accident to the Developer's field representative. Costs incurred to repair such damages, if applicable, will be charged to the Applicant.

J. Construction Site Appearance

All personnel working in the Estates of Swan Lakes are to keep all areas in which they work free of discarded materials such as lunch bags and odd materials. Throwing objects out of cars and trucks is prohibited.

K. Loud Noise Levels

Loud radios or noise will not be allowed within the Estates of Swan Lake. This is distracting and discomforting to Property Owners. Normal radio levels are acceptable. Do not mount speakers on vehicles or outside of homes under construction.

L. Vehicles and Equipment

The Developer is not responsible for any vehicle or its contents (trucks, vans, cars, etc.) left in the Estates of Swan Lake overnight Construction equipment may be left on the site while needed, but must be kept on the street, unless prior permission has been granted.

M. Personnel

Only bona fide workers are allowed on the construction sites and are required to exit the property upon completion of their work. No children or family members of workers will be permitted on the construction sites. No alcoholic beverages are permitted on the property. Participating Builder personnel will not be permitted to bring pets on property.

N. Lake Restrictions

No hazardous or toxic substances, chemicals, pesticides, fertilizers or any other matter shall be dumped into any lake, wetland or canal which is within or abuts the properties or surface water management system of the properties. The use of pesticides, herbicides and fertilizers shall be prohibited on any wetlands or preservation areas.

O. Construction Inspection

Although the Applicant is responsible to comply with the conditions of the ARB approval, periodic inspections may be made by the ARB while construction is in progress to determine compliance with the approved architectural documents. However, the ARB is not specifically responsible to make such an inspection. The ARB is empowered to enforce its policy, as set forth in the Declaration and this manual, by any action, including an action in a court of law, to insure compliance.

EXHIBITS

FIGURE 1	LOCATION MAP
FIGURE 2	LAND USE MAP
FIGURE 3	ZONING MAP
FIGURE 4	PROPOSED PLAT
FIGURE 5	LEGAL DESCRIPTION
FIGURE 6	SOIL SURVEY MAP
FIGURE 7	AERIAL
FIGURE 8	SECTION MAP
FIGURE 9	CONCEPTUAL MASTER PLAN EXHIBIT
FIGURE 9-A	PERVIOUS AND GREENSPACE EXHIBIT
FIGURE 9-B	LANDSCAPE BUFFERS EXHIBIT
FIGURE 9-C	SINGLE FAMILY LANDSCAPE DATA TABLE FORM
FIGURE 10-A	40′ TYPICAL LS/LME BUFFER SECTION
FIGURE 10-A1	40′ TYPICAL LANDSCAPE BUFFER SECTION
FIGURE 10-B	25′ TYPICAL LANDSCAPE BUFFER SECTION & EQUIPMENT SCREENING PLAN
FIGURE 10-C	15′ TYPICAL LANDSCAPE BUFFER SECTION

FIGURE 1 LOCATION MAP

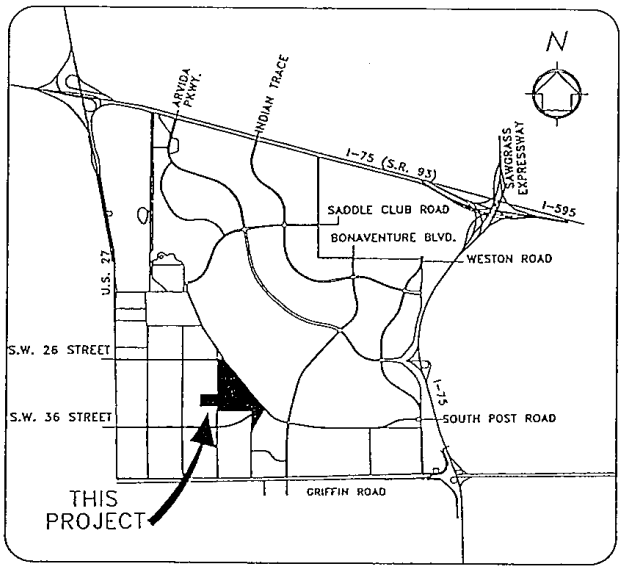

DRAWN SKP
DESIGNED
CHECKED FAH
DATE 3/3/00

ESTATES OF SWAN LAKE

LOCATION MAP
FIGURE 1

C C L CONSULTANTS, INC.
ENGINEERS SURVEYORS PLANNERS
LANDSCAPE ARCHITECTS ENVIRONMENTAL CONSULTANTS
ORLANDO POMPANO BEACH

REV	DATE	DESCRIPTION	BY

SCALE N.T.S.
PROJECT NO. 3943
SHEET 1 OF 1

FIGURE 2 LAND USE MAP

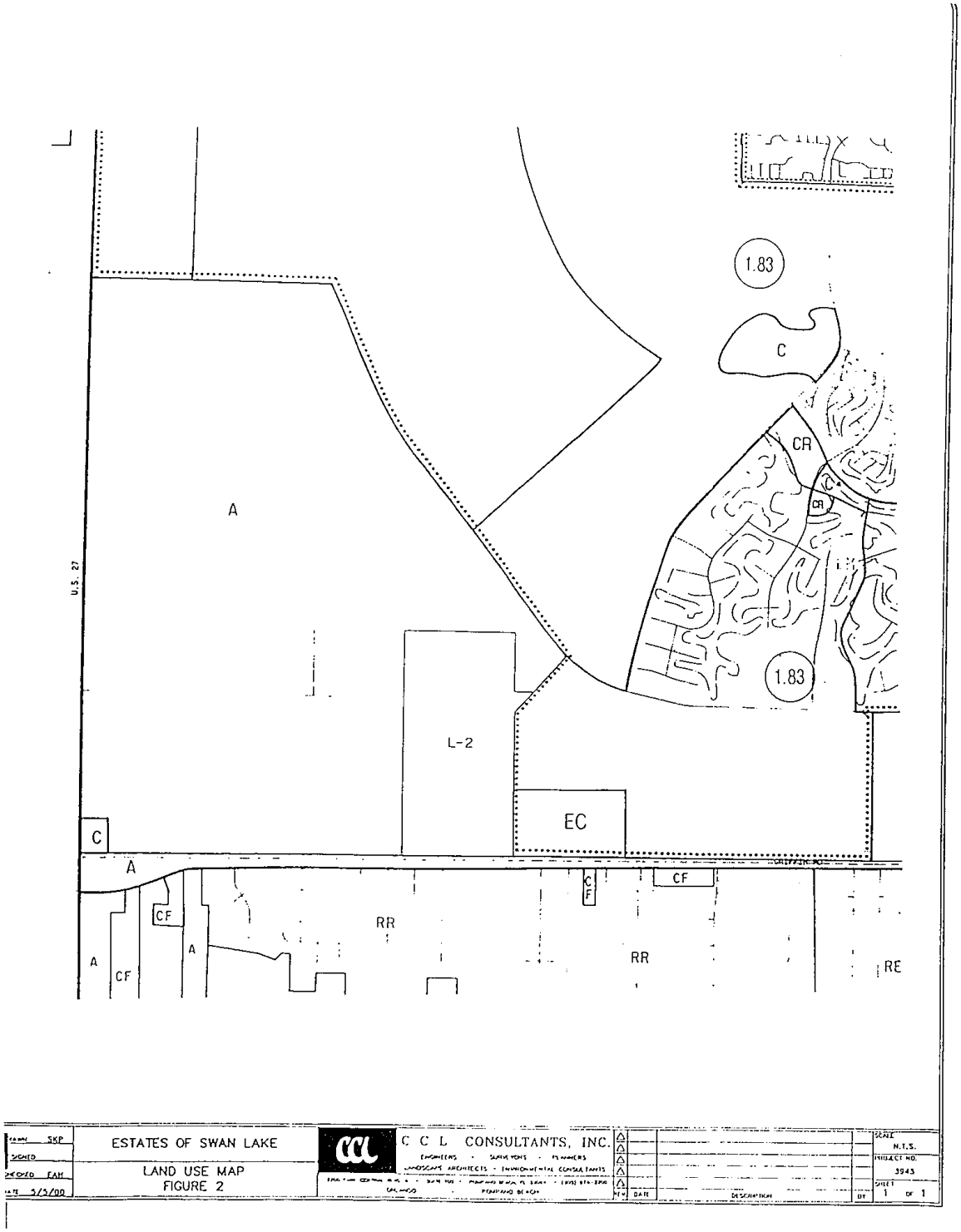

FIGURE 3 ZONING MAP

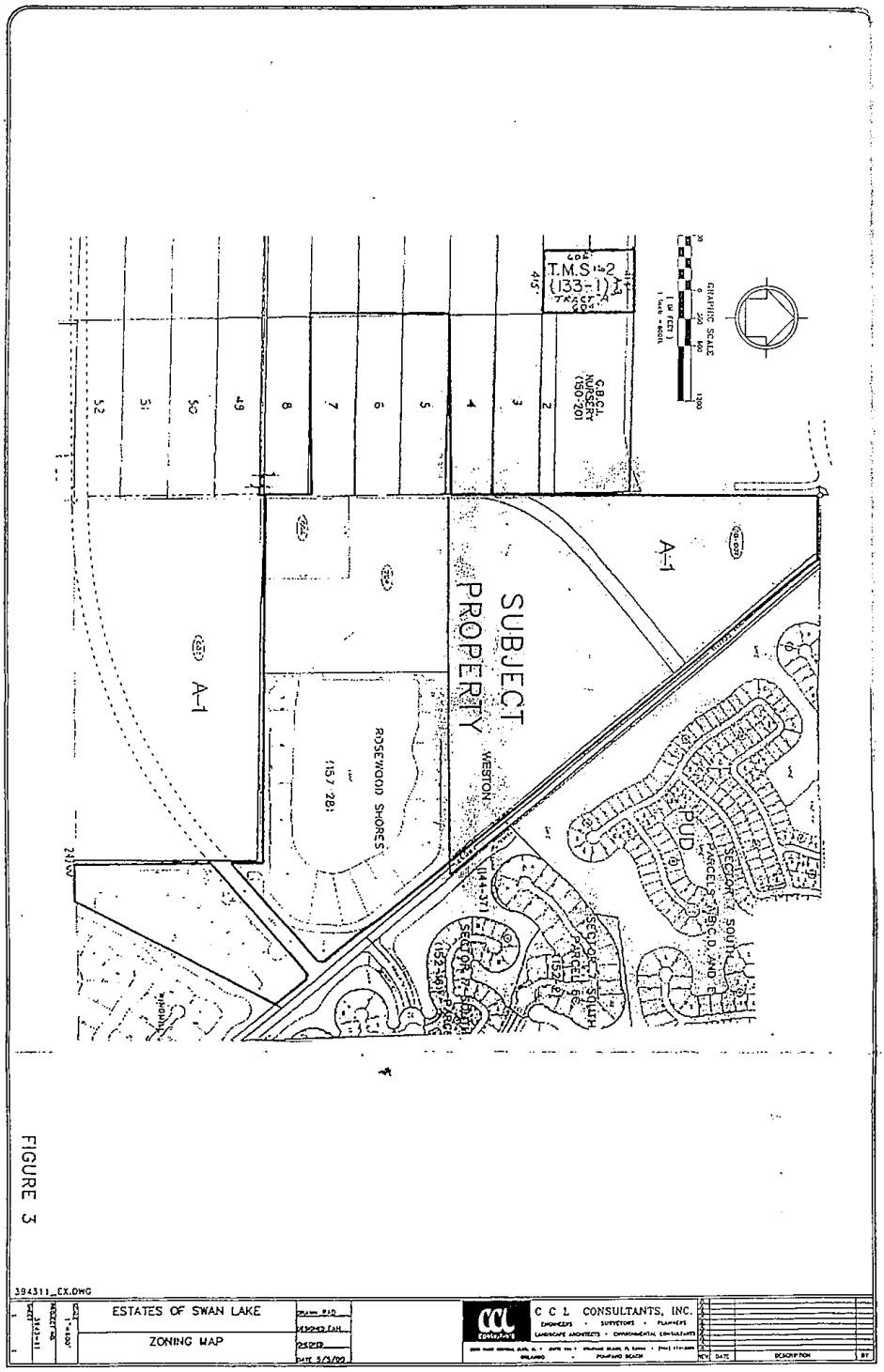

FIGURE 4 PROPOSED PLAT

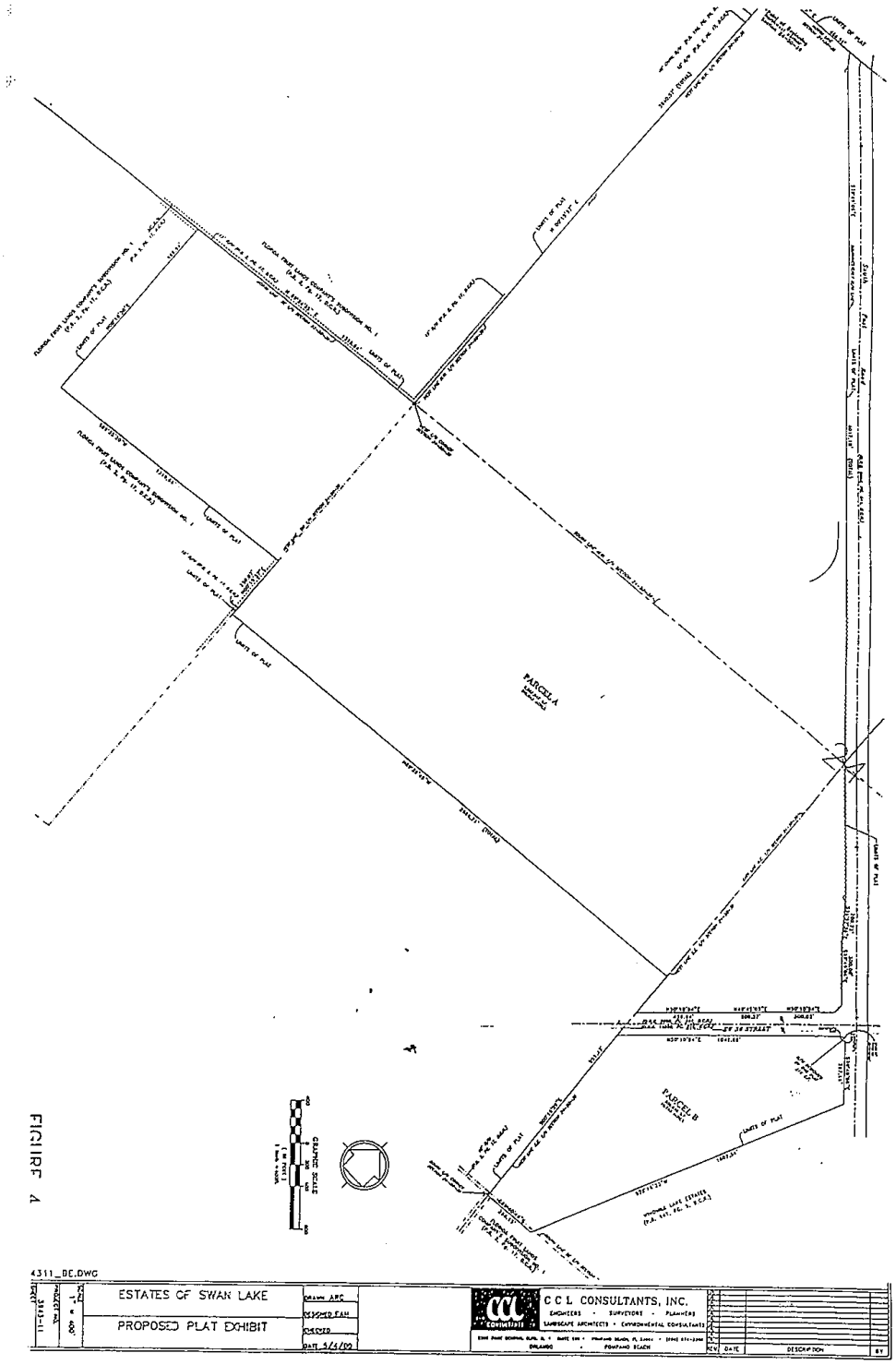

FIGURE 5 LEGAL DESCRIPTION

LEGAL DESCRIPTION:

All of ROSEWOOD SHORES, according to the Plat thereof, as recorded in Plat Book 157, Page 28, of the Public Records of Broward County, Florida.

Together with:

Tracts 49, 50 and 51, and the 15 foot rights-of-way lying adjacent to said tracts in Section 23, Township 50 South, Range 39 East, FLORIDA FRUIT LANDS COMPANY'S SUBDIVISION No. 1, according to the plat thereof, as recorded in Plat Book 2, Page 17 of the Public Records of Dade County, Florida.

Together with:

The West 1/2 of the North 1/2 of the Southwest 1/4 of Section 24, Township 50 South, Range 39 East, Broward County, Florida.

Together with:

A portion of the Northwest one-quarter (NW 1/4) of Section 24, Township 50 South, Range 39 East, Broward County, Florida, described as follows:

BEGINNING at the northwest corner of said section; thence on a grid bearing of South 89°38'26" East, along the north line of said section, a distance of 468.51 feet; thence South 32°47'16" East, along the southwesterly right-of-way line of South Post Road as recorded in Official Records Book 9098, Page 641 of the Public Records of said Broward County, a distance of 78.59 feet; thence continue along said southwesterly right-of-way line South 39°49'06" East a distance of 3359.45 feet; thence South 00°16'29" East, along the east line of said Northwest one-quarter (NW 1/4), a distance of 7.27 feet; thence North 89°39'21" West, along the south line of said Northwest one-quarter (NW 1/4), a distance of 2674.39 feet; thence North 00°15'37" East, along the west line of said Northwest one-quarter (NW 1/4), a distance of 2640.57 feet to the POINT OF BEGINNING.

Said lands lying in the City of Weston, Broward County, Florida, and containing 239.384 acres, more or less.

394311_POD.DWG

DRAWN SKP	ESTATES OF SWAN LAKE	C C L CONSULTANTS, INC.			SCALE N.T.S.
DESIGNED		ENGINEERS SURVEYORS PLANNERS			PROJECT NO. 3945
CHECKED EAH	LEGAL DESCRIPTION FIGURE 5	LANDSCAPE ARCHITECTS ENVIRONMENTAL CONSULTANTS	REV	DATE / DESCRIPTION	SHEET 1 OF 1
DATE 3/3/00		ORLANDO POMPANO BEACH			BY

FIGURE 6 SOIL SURVEY MAP

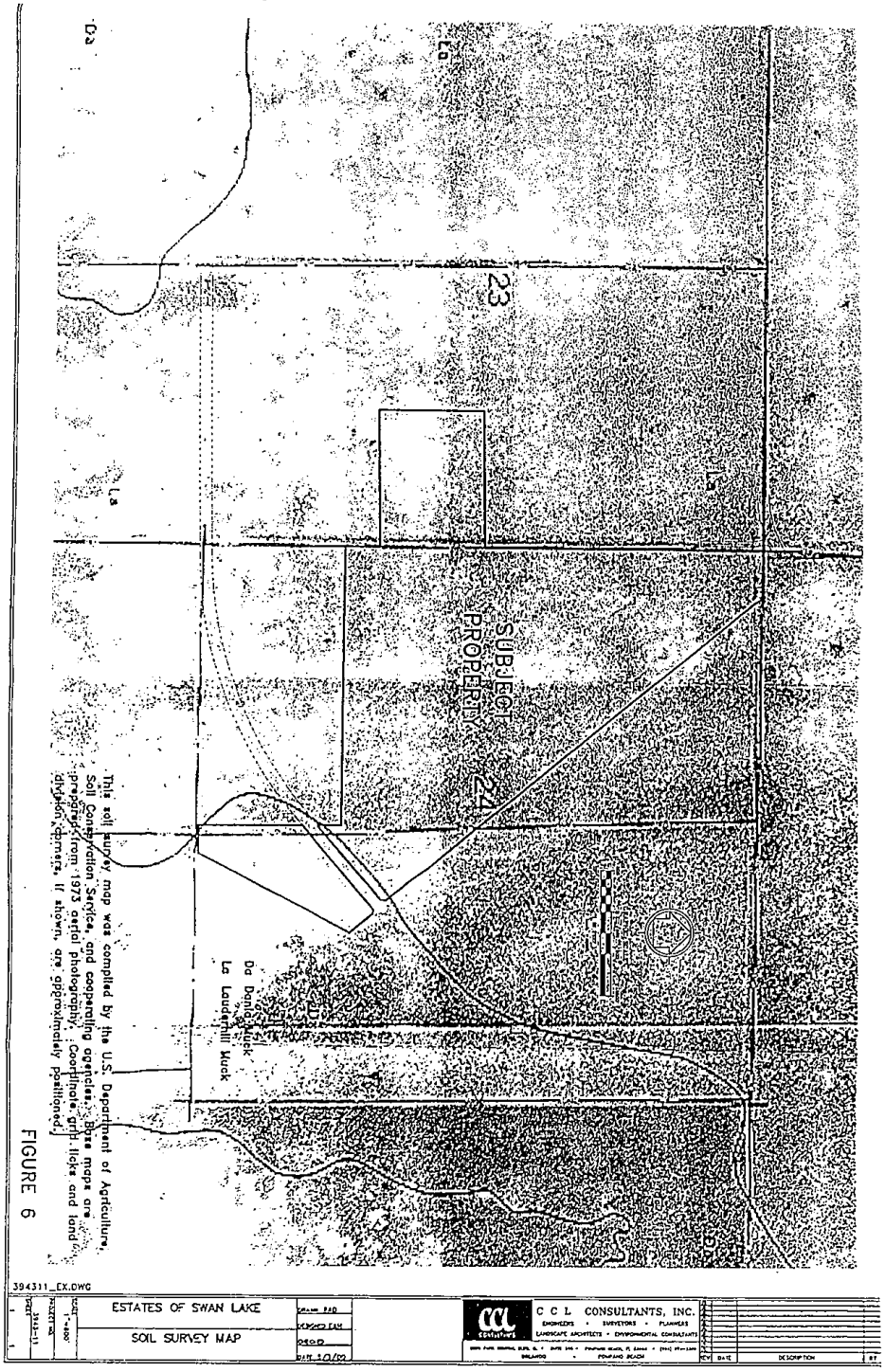

FIGURE 7 AERIAL

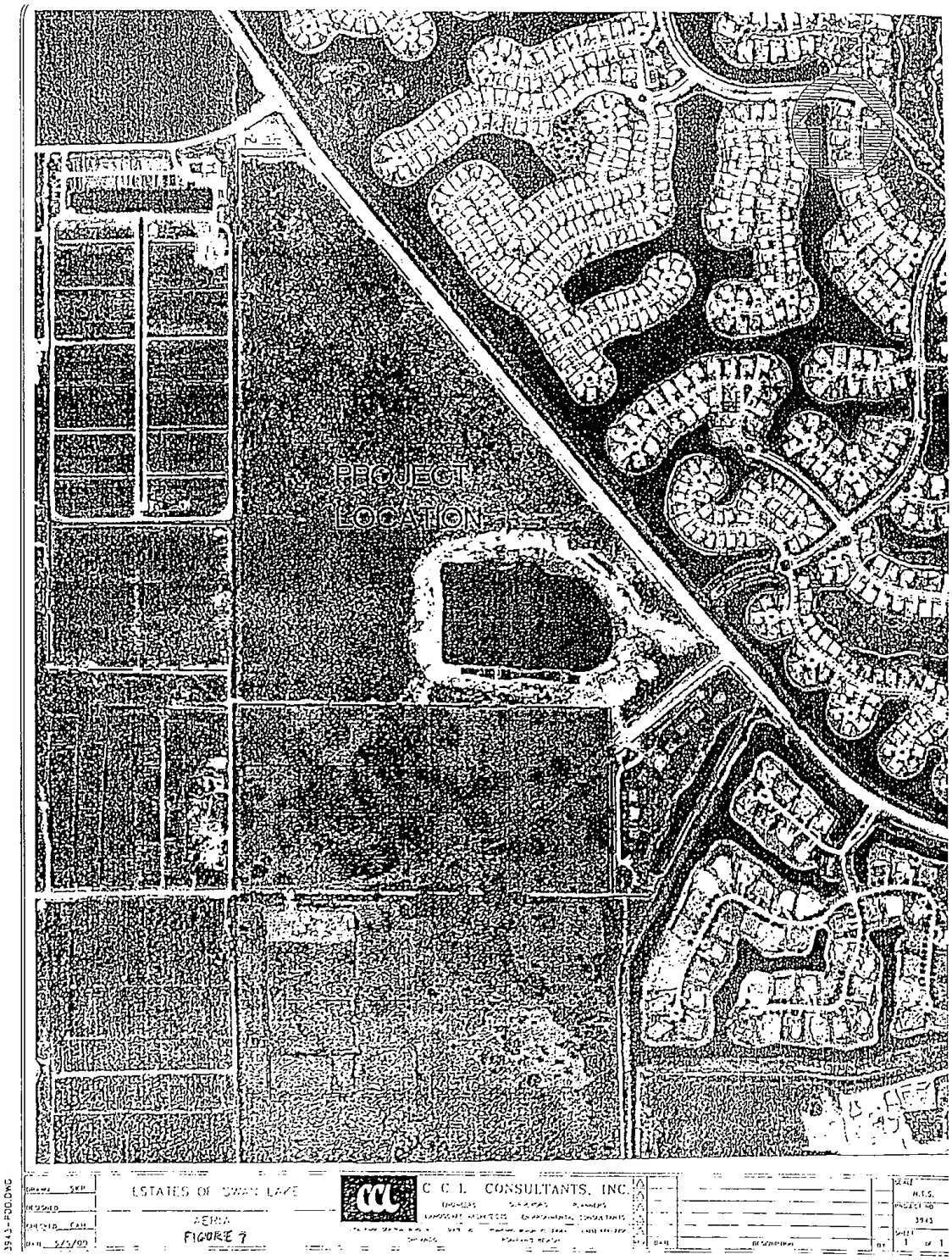

FIGURE 8 SECTION MAP

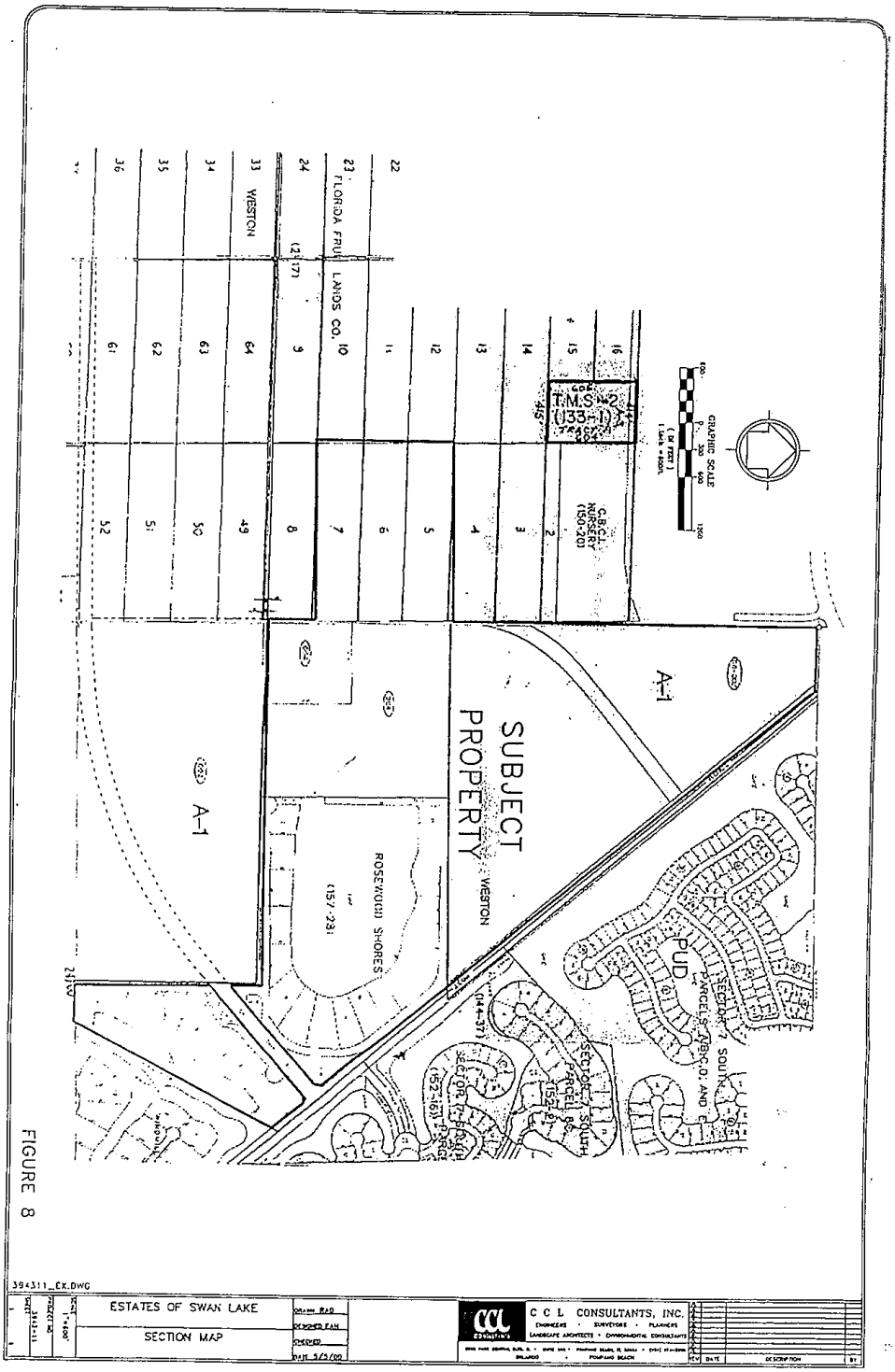

FIGURE 9 CONCEPTUAL MASTER PLAN EXHIBIT

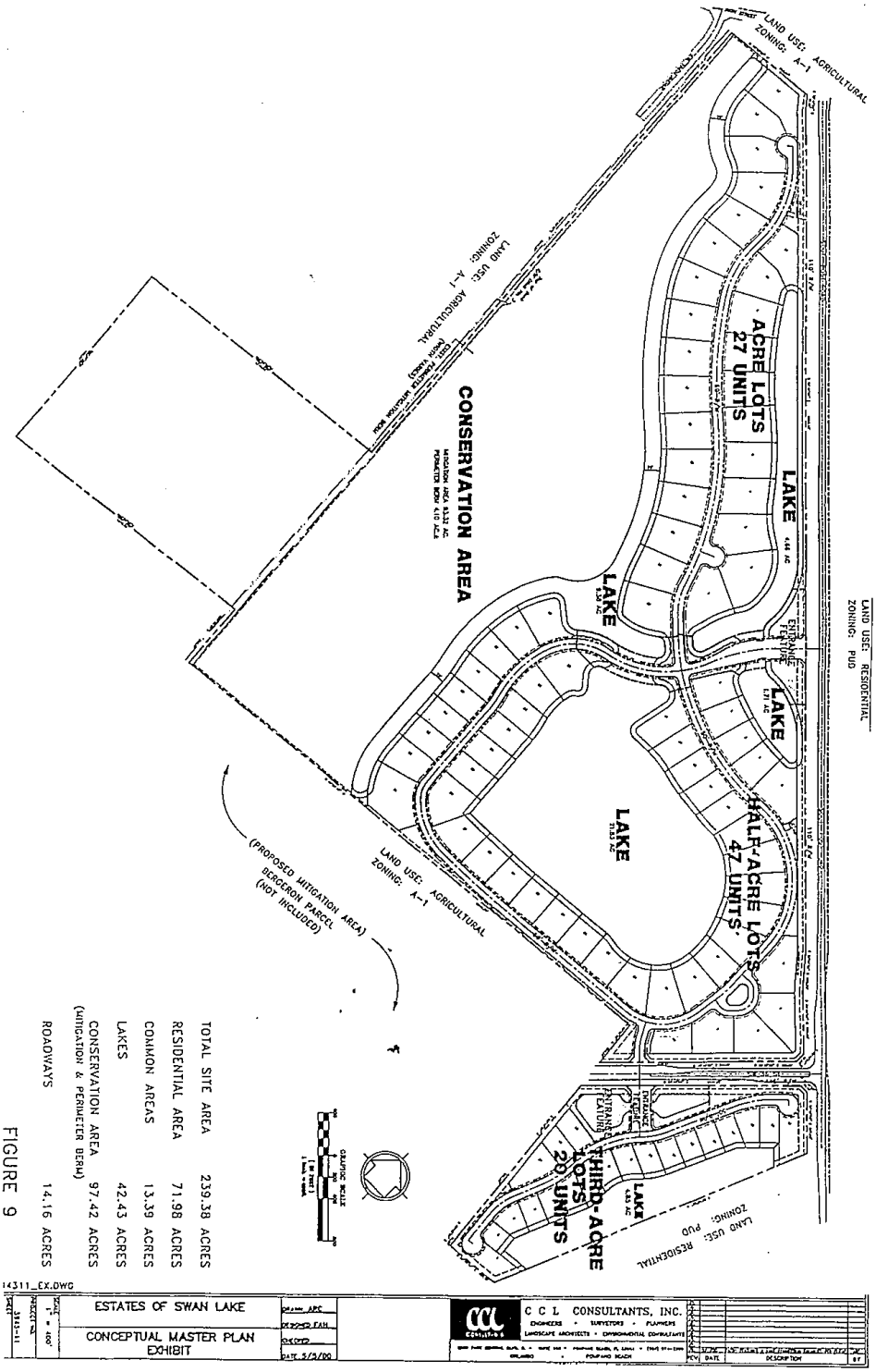

FIGURE 9-A PERVIOUS AND GREENSPACE EXHIBIT

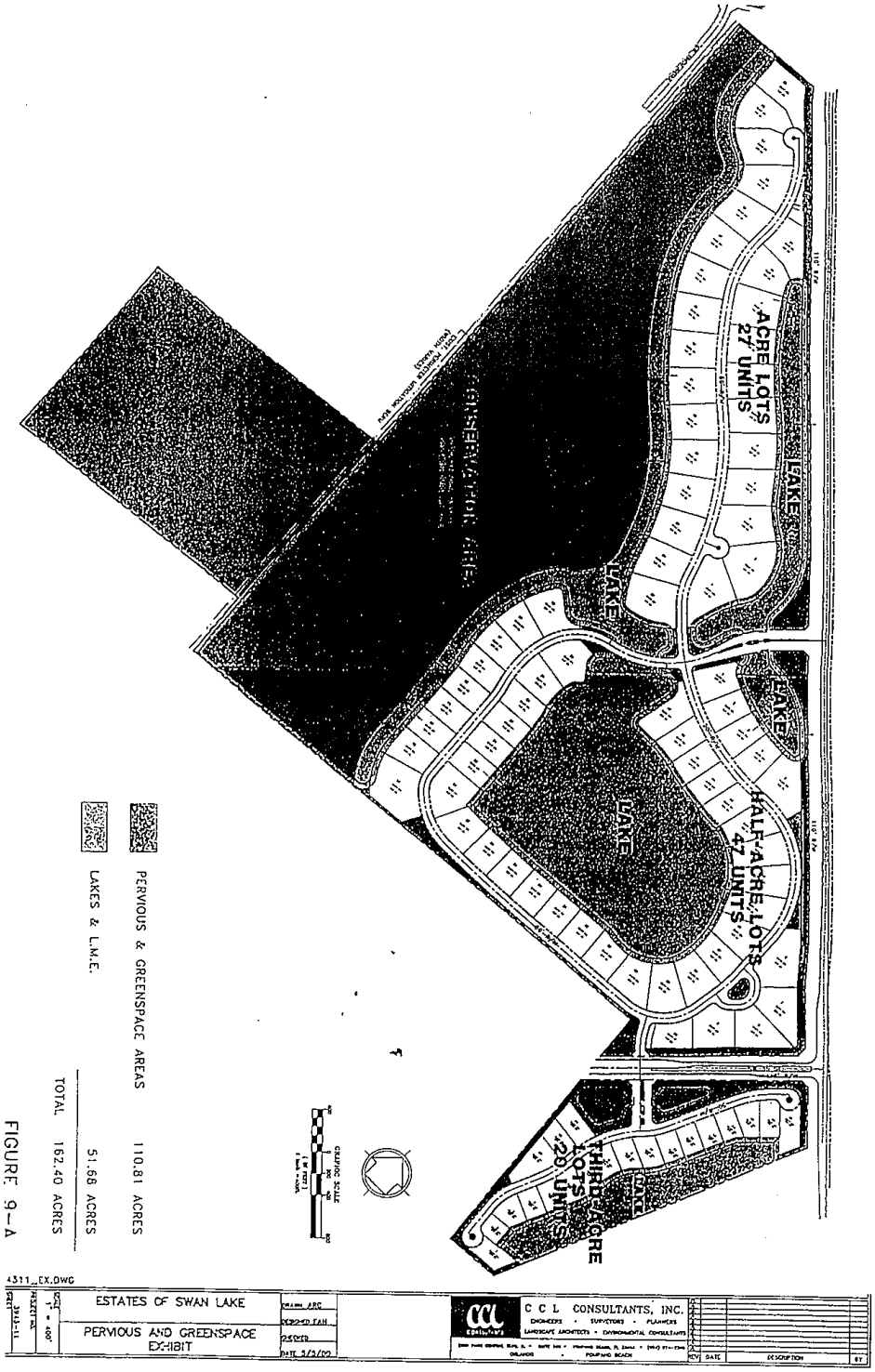

FIGURE 9-B LANDSCAPE BUFFERS EXHIBIT

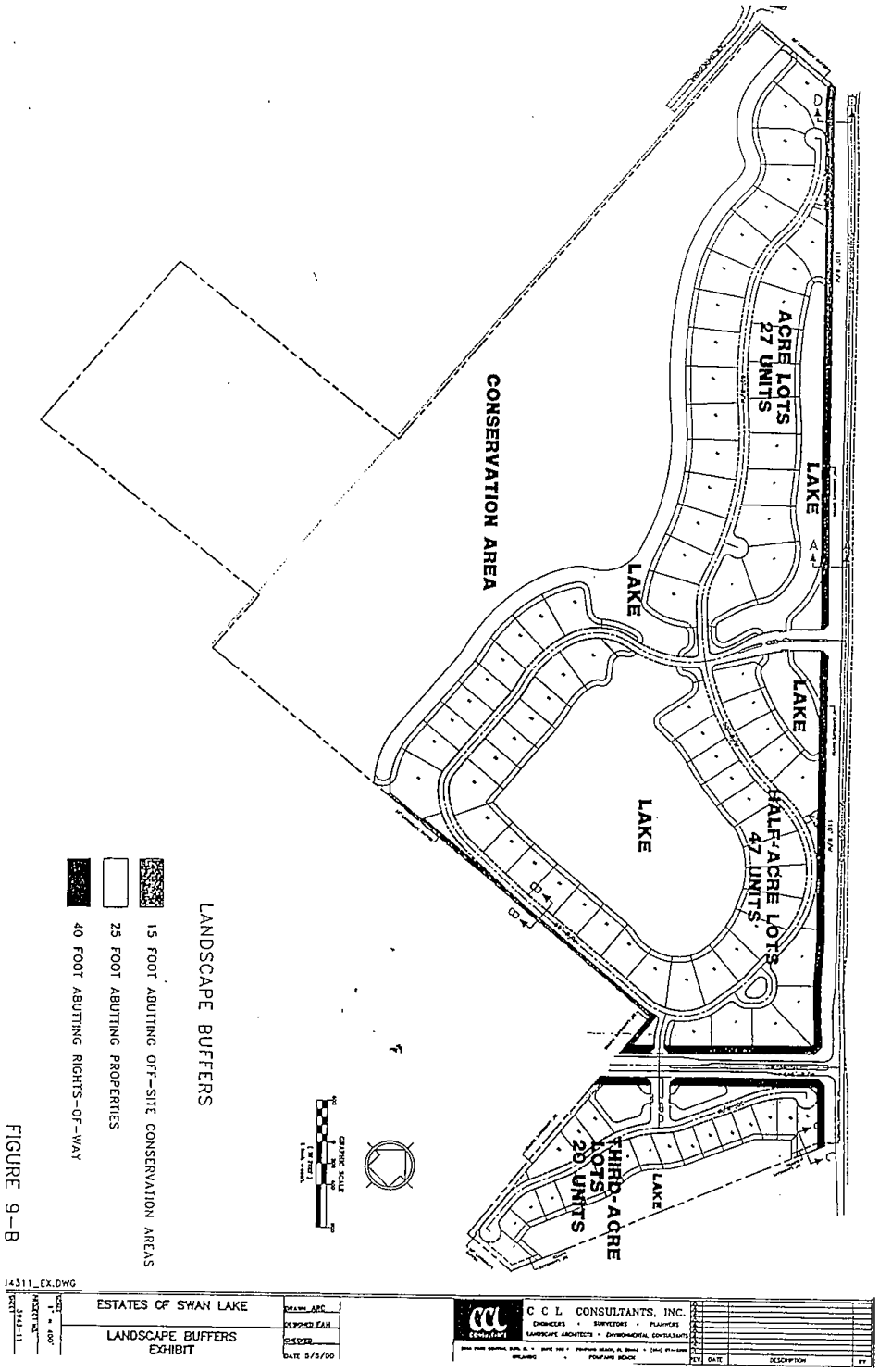

FIGURE 9-C SINGLE FAMILY LANDSCAPE DATA TABLE FORM

SINGLE FAMILY LANDSCAPE DATA TABLE
CITY OF WESTON CODE AND ZONING
LANDSCAPE SPECIFICATION FOR SINGLE FAMILY/DUPLEX DWELLINGS
(to be attached to each set of permit plans)
to be filled out by owner or authorized landscape specialist

Permit # _____ Lot: Block: Address:

_____ Total Site Area (sq. ft.)

_____ Impervious Area (sq. ft.)

_____ Pervious Area (sq. ft.)÷50 =

_____ Required Plant Units÷20 =

_____ Required Trees (20% max palms)

_____ Required Street Trees

_____ Required Shrubs (½ of Plant Units)

_____ Required 20% Xeriscape (sq. ft.)

_____ Excl. Lake Maint. Esmt. (sq. ft.)

_____ Required Xeriscape Shrubs/G.C.

_____ Turf Provided (max 80%)

SPECIES	QTY.	SIZE	NATIVE (50%) (y/n)	DROUGHT TOLERANCE (no. mod. Ver.)

APPROVAL: _____ DATE: _____

1. Minimum tree height 12 ft. height x 6' spread/FL Grade #1 material/2½" caliper, 4½' C.T.
2. Minimum palm tree height 20' O.A. with 7' wood. No more than 20% of required trees.
3. Street trees are in addition to the required trees at – 35' O.C. Street trees must be designated on chart.
4. A minimum of 20% of pervious area of site must be in xeriscape landscape, with the use of ground cover shrubs area mulches designed to have 50% minimum coverage of installation and 100% coverage within 6 months of installation, using drought tolerance species. Required shrubs may be added to the xeriscape requirement if drought tolerant species are utilized.
5. Maximum of 80% of pervious area can be in turfgrass (St. Augustine 'Floratam') excluding the lake maintenance easement.
6. 50% native plant material required (shrub & tree).
7. Minimum 2 trees are required in front yard.
8. Mechanical equipment must be screened with 30" height hedge material.
9. Topsoil required for 6" around and beneath rootball of all trees and shrubs/composed of 30% muck or horticulturally acceptable organic material.
10. 3" mulch required a minimum of 18" beyond all plantings. Guy and stake all trees.
11. Tree survey required where existing trees exist on site.
12. If irrigation system is installed, rain sensor device required.
13. Invasive species list is enforced.
14. No landscape inspection will be approved until entire site Is completed.
15. Upon completion of project – Landscape maintenance must be complied with.

Signature of Agent/Owner: _____ Date: _____

FIGURE 9-C

FIGURE 10-A 40′ TYPICAL LS/LME BUFFER SECTION

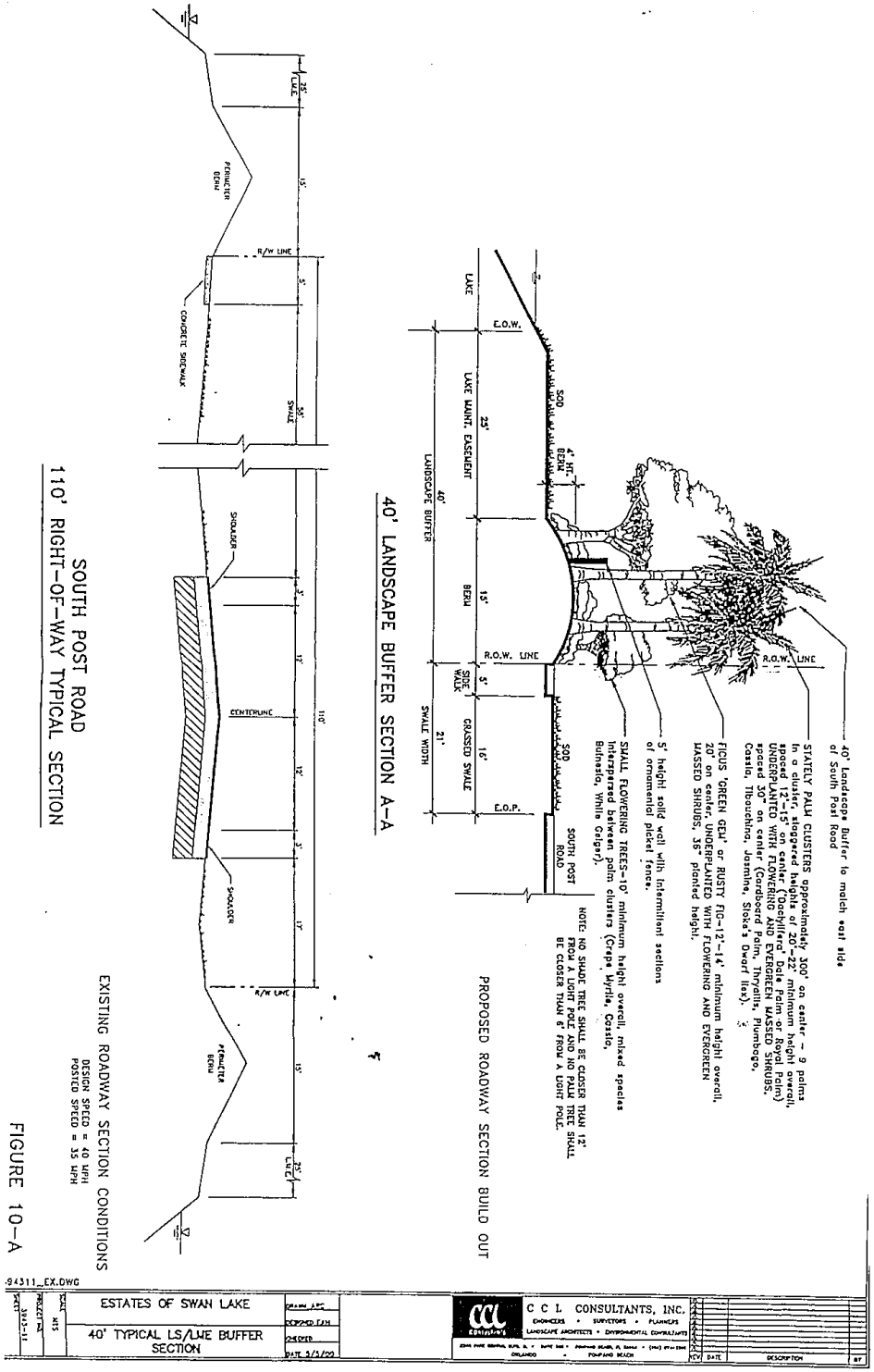

FIGURE 10-A1 40′ TYPICAL LANDSCAPE BUFFER SECTION

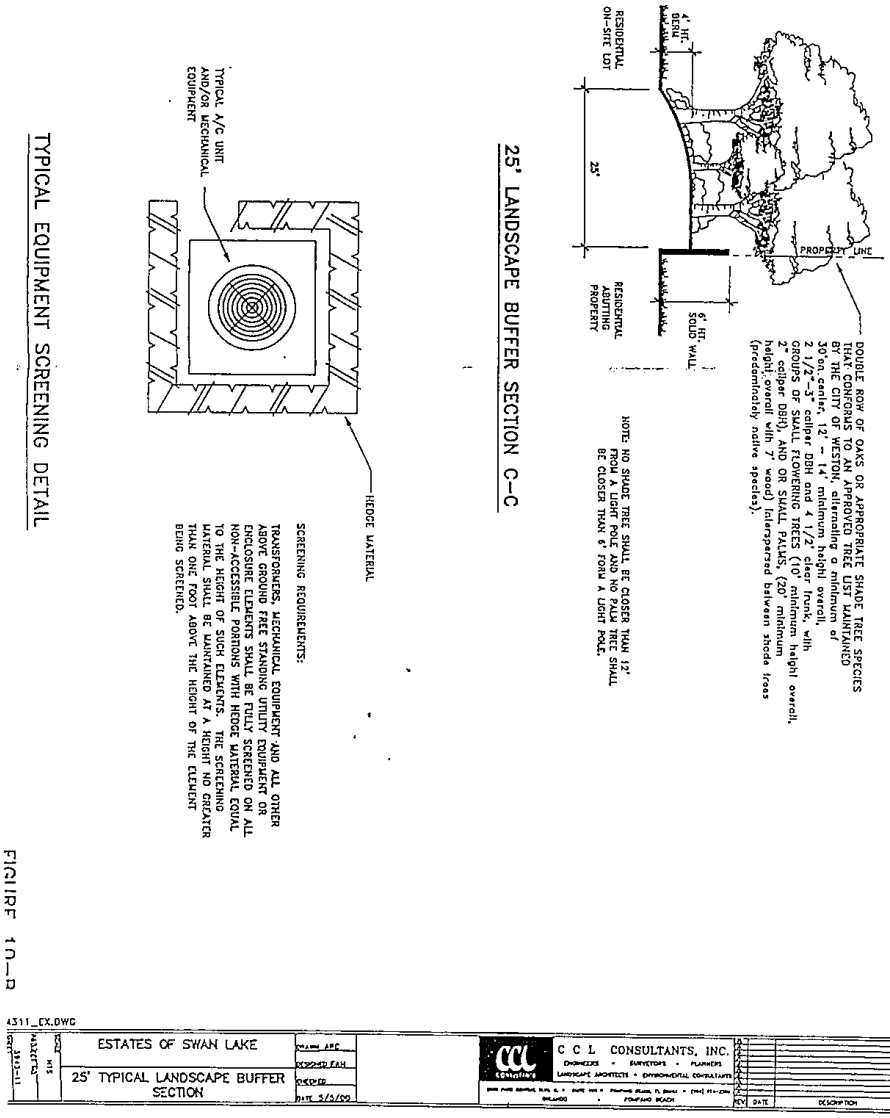

FIGURE 10-B 25′ TYPICAL LANDSCAPE BUFFER SECTION & EQUIPMENT SCREENING PLAN

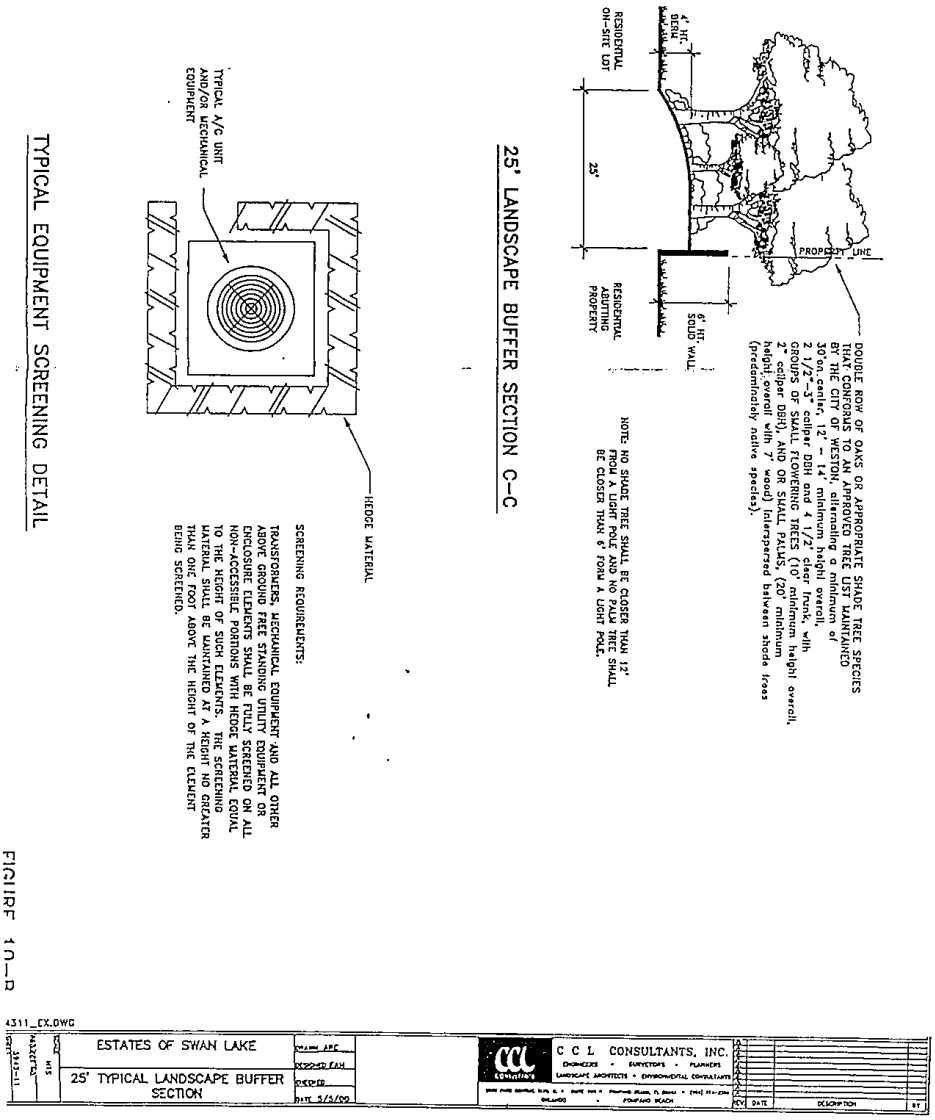

FIGURE 10-C 15′ TYPICAL LANDSCAPE BUFFER SECTION

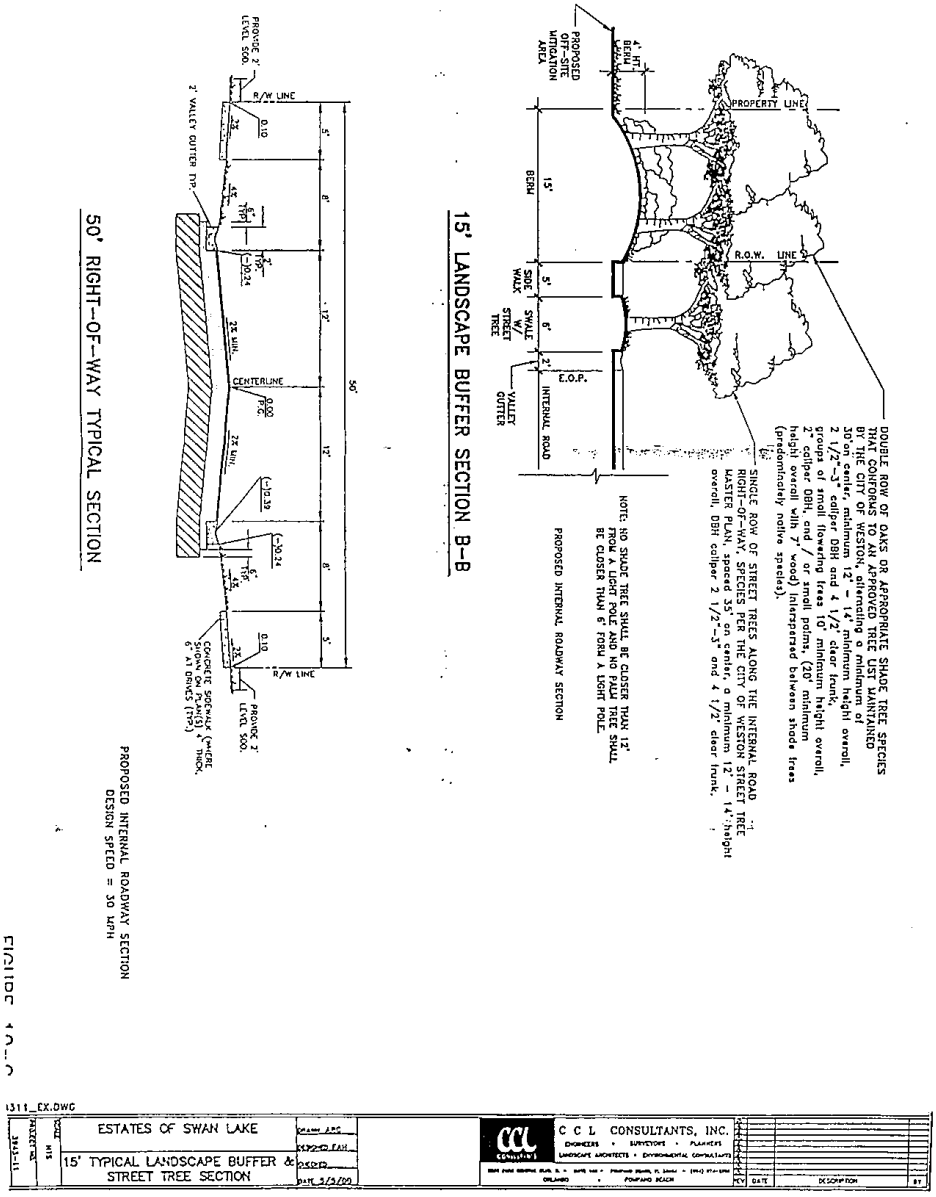

ACCESSORY USES AND STRUCTURES

§ 124.30 DUMPSTERS AND DUMPSTER ENCLOSURES.

124.30 (A) ***Dumpsters and dumpster enclosures - multi-family Development and non-residential Development.***

124.30 (A)(1) Residential plots containing four or more Dwelling Units shall not be required to provide and maintain dumpsters and dumpster enclosures so long as there are either carports, garages, or other enclosed areas suitable for storage of waste containers and provided that the residents utilize the enclosed storage areas to store their waste containers when not being made accessible for trash pickup.

124.30 (A)(2) All other multi-family residential Developments shall, at a minimum, have one four-cubic-yard garbage container and one set of recycling containers for every 25 Dwelling Units, unless provisions are made with the franchised collector for increased frequency of collection in lieu of additional or larger containers in accordance with all provisions of this Section.

124.30 (A)(3) Non-residential Development shall, at a minimum, have one garbage container and one set of recycling containers to service the Buildings in accordance with all provisions of this Section. The maximum walking distance from any egress point of the Buildings to any such dumpster enclosure shall be no greater than 100 feet.

124.30 (A)(4) Dumpsters shall be maintained free of jagged or sharp edges or inside parts which could prevent the free discharge of their contents.

124.30 (A)(5) All Recycling containers shall be located within the dumpster enclosure.

124.30 (A)(6) Dumpsters shall be emptied by a franchised collector at intervals that will preclude overflow. Dumpsters, dumpster enclosures, and the area around the dumpster shall not be used for disposal of furniture and major appliances, except during a scheduled bulk pickup by a franchised collector.

124.30 (A)(7) The dumpster, dumpster enclosure, and all surrounding areas shall be maintained by the property Owner in accordance with this Section, and shall be free of overflowing refuse at all times. If a continuous problem of insufficient dumpster capacity is proven to exist, in the sole discretion of the City, additional or larger capacity dumpsters and enclosures or increased frequency of pickup shall be required in order to eliminate the overflow problem.

124.30 (A)(8) Dumpsters shall remain closed at all times except when refuse is being placed within the dumpster. The dumpster enclosure shall be completely closed at all times except when it is necessary for ingress or egress to or from the dumpster.

124.30 (A)(9) Dumpsters and dumpster enclosures shall be located in a position accessible for collection by the equipment of the franchised collector.

124.30 (10) Dumpsters and dumpster enclosures are not permitted within any Public or Private Rights-Of-Way.

124.30 (B) ***Design specifications - multi-family Development and non-residential Development.***

124.30 (B)(1) Permits shall be applied for and obtained from the City in accordance with the Building Code. The Applicant shall have obtained all other required permits from other agencies prior to obtaining a permit from the City.

124.30 (B)(2) The perimeter of the dumpster pad shall be enclosed on three sides by an enclosure no less than six feet in Height. The enclosure must provide a visual barrier between the interior and exterior of the dumpster area. At no time shall any portions of the dumpster be visible. The enclosure shall be constructed of masonry and finished to match the Building that it serves. The remaining side of the dumpster enclosure shall be enclosed with gates constructed in accordance with requirements set forth in this Section

124.30 (B)(3) The minimum inside dimensions of the enclosure shall be no less than 12 feet by 12 feet.

124.30 (B)(4) Each dumpster enclosure shall have at least a 36-inch pedestrian opening on one side to enable a Person to walk into the enclosure to deposit trash, garbage, refuse, or recyclable materials.

124.30 (B)(5) The gates of the enclosure shall be constructed of a frame with opaque or translucent walls affixed thereto, and both frame and walls shall be of a material of sufficient strength to withstand normal use. Gates constructed with wood are prohibited. Gates shall be attached to metal posts at least four inches in diameter with at least two hinges. Each gate shall have a wheel at the bottom to prevent sagging and shall have drop pins or rods to hold the gates in place in both open and closed positions.

124.30 (B)(6) The base of the enclosure shall be six-inch thick poured concrete, as required by the Building Code, raised above the surrounding grade so not to collect storm water. The concrete base shall extend six feet beyond the front opening of the enclosure as an apron, and shall be level with the surrounding grade.

124.30 (B)(7) All dumpster pads shall be at least two feet larger than the dumpster on all sides. Wheel stops or posts shall be permanently affixed to the pad at least one foot inside the perimeter of the pad to prevent the dumpster from striking the enclosure during the collection process.

124.30 (C) ***General requirement.***

124.30 (C)(1) The above requirements are minimum standards that shall be shown on all site plans.

124.30 (C)(2) Any enclosures provided for the Use of food-handling establishments shall comply with the rules and regulations of the Broward County Health Department relative to can-wash facilities, floor drains, etc., currently enacted or as may be amended from time to time.

124.30 (C)(3) Any dumpsters used to deposit food waste from establishments preparing and serving food shall be emptied not less than every other day.

§ 124.31 FENCES AND WALLS.

124.31 (A) ***Residential property***. Fences and walls may be erected within or abutting any property line on a residentially zoned property. Fences or walls shall not exceed six feet in Height on residentially zoned property, and eight feet in Height when abutting non-residentially zoned property.

124.31 (B) ***Non-residential property***. Fences and walls may be erected within or abutting any property line on a non-residentially zoned property. Fences or walls shall not exceed eight feet in Height.

124.31 (C) ***Right-Of-Way Frontage***. Fences and walls that abut a Right-Of-Way shall be set back a minimum of three feet from the Right-Of-Way line and shall have a continuous Hedge of a minimum of four feet of Height at the time of planting and shall attain, within one Year, a Height equal to or greater than the Height of the fence or wall.

124.31 (D) ***Prohibitions***.

124.31 (D)(1) No fence or wall shall be erected on a property in front of the principal Structure.

124.31 (D)(2) No fence or wall shall be erected on the side(s) of a property that extends beyond the front of the principal Structure on the side where the fence or wall is located.

124.31 (D)(3) No barbed wire, electrified, barbed or razor-wire topped fences or walls shall be erected on any property.

124.31 (D)(4) No fence or wall shall encroach upon any drainage, water and sewer, lake access or lake maintenance easement.

124.31 (D)(5) No fence or wall shall impede or impair drainage to or from the adjacent property.

124.31 (E) ***Chain Link Fences***. Chain link fences shall be black or green vinyl coating, knuckled at the top and bottom and shall have both a top and bottom rail.

§ 124.32 SWIMMING POOLS.

124.32 (A) All swimming pools shall be completely enclosed by either an open mesh screen enclosure or a fence or wall a minimum five feet in height with such design and material as will prevent unauthorized access to the pool area. All screen doors and fence gates shall be equipped with self-closing and self-locking mechanisms.

124.32 (B) Swimming pool Setbacks in required side or rear yards may be reduced to five feet for Single-Family homes provided no encroachment onto a recorded easement would be created. For all other swimming pools, Setbacks in required side or rear yards may be reduced to five feet except where they abut Single-Family residential Development. In such cases, the Setback for the swimming pool shall be 25 feet. For the purpose of this Section, the minimum Setback is from the outer edge of the pool deck for fenced pools and from the exterior of the screen enclosure for screen-enclosed pools.

§ 124.33 HOME-BASED PUBLIC ASSEMBLY USES.

124.33 (A) The standards set forth in this subsection shall apply to any proposed or existing assembly Use within Single-Family Residential Districts (SF) and Multi-Family Residential Districts (MF).

124.33 (B) ***Home-based assembly Uses.*** Home-based assembly Uses at Single-Family and multi-family residential Dwelling Units are permitted, whether for social, religious, or other reasons, as an incidental Accessory Use to the principal residential Use, provided that assemblies do not occur more than four times per month for two consecutive months, or result in more than ten vehicles being parked near the Dwelling Unit at each home-based assembly. Vehicles parked legally on the site of the home-based assembly shall not be counted toward the ten vehicles.

§ 124.34 ACCESSORY USE REGULATIONS.

Accessory Uses shall comply with the following:

124.34 (A) They shall be located on the same Lot as the main permitted Use.

124.34 (B) They shall be subordinate to, incidental to and customarily associated with the main permitted Use.

124.34 (C) The Use is consistent with the purpose of the zoning district in which it is located.

124.34 (D) The necessary safeguards will be provided for the protection of surrounding property, persons and neighborhood values.

124.34 (E) The public health, safety, and general welfare of the community will not be materially and adversely affected.

124.34 (F) Enclosed Accessory Uses, such as but not limited to cabanas, mother-in-law quarters, patios, storage sheds, and recreational Structures may occupy no more than a total of 25% of the space occupied by the main permitted Use and shall have the same roof profile, materials and color and exterior finish, materials, color and architectural style as the main Structure.

124.34 (G) The maximum Impervious Area on a single family residential Lot shall not exceed 60%.

124.34 (H) In making a determination of an Accessory Use, the City Manager may require the Applicant to provide evidence that said Use meets all of the criteria above.

§ 124.35 PAIN MANAGEMENT CLINICS.

Pain Management Clinics are prohibited from On-Site dispensing of controlled substances that are identified in Schedules II, III, or IV in Sections 893.03,893.035 or 893.0355, Florida Statutes, unless otherwise expressly permitted by law.

NON-CONFORMING STRUCTURES AND USES.

§ 124.37 NON-CONFORMING STRUCTURES AND USES.

124.37 (A) ***Non-conforming Use of a conforming Structure***. The lawful non-conforming Use of a Structure may be continued, although such Use does not conform to the regulations of an applicable zoning district within which the Building is located. Any such use shall only be changed to a permitted Use. A non-conforming Use shall not be expanded. If the non-conforming Use is Abandoned, any further use of said Building shall conform to the regulations of the applicable zoning district.

124.37 (B) ***Conforming Use of a non-conforming Structure***. A lawful non-conforming Structure may be utilized for any Use that conforms to the regulations of the applicable zoning district within which the Structure is located. Structural alterations may only be made when they do not increase the degree of non-conformity of the Building.

124.37 (C) ***Non-conforming Use of a non-conforming Structure***. The lawful non-conforming Use of a lawful non-conforming Structure may be continued although such Use and Structure do not conform to the regulations of the applicable zoning district within which the Structure is located. However, neither the Use nor the Structure shall be expanded. If the non-conforming Use is Abandoned, any further Use of said Structure shall conform to the regulations of the applicable zoning district.

124.37 (D) ***Non-conforming Use of land***. The lawful non-conforming Use of land may be continued although such Use does not conform to the regulations of the applicable zoning district within which the land is located. However, no such Use shall be enlarged, intensified or extended to occupy a greater area of land, nor shall the Use be reinstated following abandonment. Any such Use shall only be changed to a permitted Use within the applicable zoning district. A

non-conforming Use shall not be moved in whole or part to an adjacent property not already containing such Use. In addition, the land which contains the non-conforming Use shall not be subdivided in order to continue such a Use.

124.37 (E) ***Maintenance***. Necessary maintenance may be made to any non-conforming Structure, provided no structural alterations are made. Further, such work in any 12-month period shall not exceed 25% of the value of such Structure as shown on the Broward County tax assessment records or as established by an independent appraiser who is a designated member of a nationally recognized professional appraiser's organization.

124.37 (F) ***Repair of damage.*** Any nonconforming Structure that becomes damaged to an extent of fifty (50) percent or more of the number of Structures on site or of its value as shown on the Broward County tax assessment records, by fire, flood, explosion, wind, war, riot or any other act of God or man, shall not be reconstructed or used or occupied except as provided in the applicable zoning district. In addition, if any non-conforming Structure becomes physically unsafe or unlawful due to lack of repairs or maintenance, and is declared by the duly authorized City official to be unsafe or unlawful by reason of physical condition, it shall not thereafter be restored, repaired, or rebuilt except in conformity with the regulations of the zoning district in which it is located.

124.37 (G) ***Compliance with regulations***. Nothing in this Section shall diminish the responsibility of an Owner to maintain his Use or Structure in full compliance with all other City, county, State or federal regulations or licensing procedures.

124.37 (H) ***Establishment of non-conformity***. For the purpose of this Section, the mere possession of a valid approval to Use land or Buildings or valid license to do so without actual demonstrable Use of such land or Structure is an insufficient basis to establish lawful non-conformity.

124.37 (I) ***Abandonment of a non-conforming Structure or Use.*** If a non-conforming Structure or Use is Abandoned, removed, discontinued, or ceases (except when government action impedes access to the Premises), then any and every future Use of the Structure or land shall be in conformity with the applicable land Development regulations. All material and equipment associated with the Abandoned non-conformity shall be completely removed from the Premises by its Owner. A non-conforming Structure or Use shall be considered Abandoned or having ceased when the Use has been discontinued for a period of 180 consecutive days.

TEMPORARY USES AND STRUCTURES

§ 124.40 TENTS.

124.40 (A) No tent shall be erected, used, or maintained except for temporary recreational activities.

124.40 (B) Tents for special events shall require a permit in accordance with § 100.06 et seq.

§ 124.41 OUTDOOR SALES.

All display or sale of merchandise must be conducted within a completely enclosed Building except where specifically permitted or pursuant to a special event permit issued pursuant to Chapter 100 of this Code of Ordinances. Except where specifically permitted, the display or sale of merchandise shall not be conducted within any Public or Private Right-Of-Way, required parking or Traffic circulation area, fire lane or any Landscaped area. Permits may not be issued more often than once each six months and may not be for a duration greater than 14 days.

§ 124.42 OUTDOOR MANUFACTURING AND SERVICES.

The manufacturing, assembly and/or repair of goods are prohibited from being performed outside of a permanent fully enclosable Structure.

§ 124.43 TEMPORARY SALES/RENTAL/LEASING OFFICES.

124.43 (A) Temporary sales/rental/leasing offices may be erected and used on the plot of a residential or non-residential project during Construction of the project. Such temporary sales/rental/leasing offices shall be removed within 30 days after the earliest of:

124.43 (A)(1) the permanent sales/rental/leasing office has received a Certificate Of Occupancy;

124.43 (A)(2) the certificate of completion has been issued for the last non-residential Building on the site of a non-residential project;

124.43 (A)(3) the last unit within a residential Development has received a Certificate Of Occupancy;

124.43 (A)(4) two years from the Building Permit issuance date for the sales/rental/leasing office or

124.43 (A)(5) the expiration of the Building Permit.

Time extensions may be granted by the City Commission in its sole discretion.

124.43 (B) Any permit application for a temporary sales/rental/leasing office shall require site plan approval.

124.43 (C) A temporary sales/rental/leasing office that is located within a permanent Structure, i.e., model home, may remain on the site until the sale of the property.

§ 124.44 TEMPORARY CONSTRUCTION TRAILERS AND STORAGE UNITS.

Temporary Construction trailers and temporary storage units for materials to be used for On-Site Construction may be placed on a property after issuance of a Development Order, subject to the following limitations:

124.44 (A) The location of all trailers, access to the trailers, size of trailers parking and other information shall be submitted to the City Manager for approval.

124.44 (B) No sales or leasing shall be conducted from these trailers.

124.44 (C) All trailers shall be removed prior to the issuance of the certificate of completion or the first Certificate Of Occupancy, whichever occurs first.

REGULATIONS

§ 124.47 LOT SIZE, HEIGHT AND SETBACKS.

124.47(A) ***Dimension requirements.***

SINGLE FAMILY								
ZONING DISTRICT	MIN. LOT SIZE	MIN. LOT FRONTAGE	MAX. HEIGHT	FRONT	REAR	SIDE	STREET SIDE	MINIMUM SF
R1	4,000 sf	25'	35'	20	10'	5'	20'	1,200
R 2	7,150 sf	35'	35'	20	15'	5'	20'	1,200
R 3	7,500 sf	35'	35'	20	15'	7.5'	20'	1,200
R4	Lot of record	Lot of record	35'	25	15'	7.5' (5' for lots less than 60' in width)	25'	1,200
RE	10,000	45	35'	25	15'	10	25'	1,200
RZ	4,000 sf	25'	35'	20	15'	0/10′	20'	1,200

MULTI-FAMILY								
ZONING DISTRICT	MIN. LOT SIZE	MIN. LOT FRONTAGE	MAX. HEIGHT	FRONT	REAR	SIDE	MIN. UNIT SF	BUILDING SEPARATION
MF1	5 acres		2 stories or 35′	25'	20'	15'	1 br 750sf, 2br 900sf, 150sf each add. br	15'
MF2	5 acres		4 stories or 50'	35'	30'	15'	1 br 750sf, 2br 900sf, 150sf each add. br	15'
MF3	5 acres		8 stories or 100'	45'	40'	15'	1 br 750sf, 2br 900sf, 150sf each add. br	15'

NON- RESIDENTIAL						
ZONING DISTRICT	MIN. LOT SIZE	MAX. HEIGHT	FRONT	REAR	SIDE	
I-1	2 acres	3 stories or 35'	50'	25'	25'	
O-1	1 acre	5 stories or 65'	50'	25'	25'	
C-1	1 acre	2 stories or 35'	25'	25'	25'	
CF	1 acre		25'	25'	25'	
GC	Existing	Existing	Existing			
CV	Existing	Existing	Existing			
F-1	Existing	Existing	Existing			
AE	Existing	Existing	35′			

124.47 (B) ***Setback Encroachments.*** Every part of every required yard Setback shall be open and unobstructed except as hereinafter provided or as otherwise permitted in this Code.

124.47 (B)(1) Mechanical equipment, including, but not limited to air conditioning units, generators, Irrigation and swimming pool equipment, may not project over 60 inches from the Building wall into a required minimum yard Setback.

124.47 (B)(2) Unenclosed and unroofed patios or decks may be located in a required side or rear yard to within five feet of a plot line or dedicated easement in accordance with §§ 120.01 and 120.02.

124.47 (B)(3) Accessory Buildings and Uses shall require the same Setbacks as principal Buildings except as follows:

124.47 (B)(3)(a) In Single-Family and two-family districts, on lots not on a Corner, Side and rear yard Setbacks may be reduced to five feet for Accessory Buildings and Uses when located on the rear half of the plot behind the principal Structure provided no encroachment onto a recorded easement would be created.

124.47 (B)(3)(b) Notwithstanding any other provision in this Code, in agricultural and estate zoning districts Accessory Buildings and Structures for the housing or shelter of Animals shall require a minimum Setback of 50 feet from all plot lines.

124.47 (B)(4) In residential districts accessory Structures may not exceed ten feet in Height.

124.47 (B)(5) Roof overhangs may not project more than 18 inches into a required yard (24 inches if the distance to the property line is ten feet or greater).

124.47 (C) ***Rooftop Equipment.***

No portion of any Roof top equipment may project above the Parapet or screening including all mechanical, electrical equipment, vents and stacks.

§ 124.48 SUPPLEMENTAL SETBACK REGULATIONS.

124.48 (A) ***Determination of yards***. When the definitions of yards do not clearly determine the front, side or rear yard, the City Manager shall be guided by the pattern of Development in the vicinity of the Lot and the platting of the lots in question in determining what is the applicable yard.

124.48 (B) ***Double Frontage lots***. The required front yard shall be provided on each Street Frontage.

§ 124.49 EXCLUSION FROM HEIGHT LIMITS.

Non-illuminated and non-moving architectural features, vertical attachments above the Height of the Structure, and Flagpoles, all of which are not a part of the Structure, may exceed the permissible Height limit in any non-residential district by not more than 25%.

§ 124.50 DOUBLE FRONTAGE REGULATIONS.

Double Frontage lots shall be subject to the following requirements:

124.50 (A) all fronts of Buildings shall face the same direction;

124.50 (B) no vehicular access from the rear of the Building;

124.50 (C) the Rear Setback shall be the same as the required Front Setback; and

124.50 (D) all Accessory Structures shall be screened.

§ 124.51 LAND USE SEPARATION.

124.51 (A) ***Generally.*** It is the intent of these provisions to establish suitable minimum separation between residential and non-residential Uses in order to accomplish the following:

124.51 (A)(1) To better reinforce compatible Development with adjacent residential and nonresidential land Uses, particularly low-density residential Uses through proper land Use transitions and separation techniques.

124.51 (A)(2) To provide more adequately for the proper siting of non-residential Accessory Uses such as loading, refuse storage, parking, mechanical equipment, and Exterior Lighting that can be the cause for noise, dust, glare, and other nuisances or inconveniences in proximity to low-density residential areas.

124.51 (A)(3) To provide unobstructed minimal space for fire access, driveways, and service roads to service non-residential activities.

124.51 (A)(4) To provide unobstructed space for adequate Landscaping to screen Uses that adjoin residential settings.

124.51 (B) ***Separation characteristics.***

124.51 (B)(1) Separations shall be provided between all residential and non-residential Uses. Non-residential Uses shall include, but not be limited to, office, Commercial, Institutional, industrial, and other like types of Uses that generate Traffic, noise, glare, or other nuisance-like activities.

124.51 (B)(2) Separations shall be a minimum of 100 feet wide on all adjacent sides exclusive of Street facings. Landscaping in separations shall be a minimum of 50 feet

in width to permit minimum space for the creation of Landscape berms, mounds, and the planting of vegetation including shade Trees and Hedge materials. The width of the separation shall increase five feet for every ten feet, or fraction thereof, the Height of the Building exceeds 30 feet.

124.51 (B)(3) The City may require other means of separation including masonry walls to ward off noise and/or visually screen non-residential properties from residential, after review of and in accordance with the guidelines set forth in subsection (A) of this Section. All Landscape areas shall be established beyond any and all required Utility, drainage, or other easements that would compromise the establishment of dense Landscaping without interfering with Utilities.

124.51 (B)(4) The following are permitted only in areas that lie beyond the required Landscaped portions of the separation area:

124.51 (B)(4)(a) Fences, walls, and Hedges.

124.51 (B)(4)(b) Parking.

124.51 (B)(4)(c) Service drives.

124.51 (B)(4)(d) Utility easements.

124.51 (B)(4)(e) Drainage easements.

§ 124.52 LIGHTING STANDARDS.

124.52 (A) ***General provisions.*** Lighting shall not be used as advertising nor shall it draw more attention to the area at night than during the day. Lighting shall be compatible with the neighborhood.

124.52 (B) ***Measurement.*** Footcandles shall be measured with a direct reading portable low range light meter having an accuracy range of within plus or minus 8% at 1.2 Footcandles. The accuracy of the meter shall be certified by an independent commercial photometric laboratory within one Year of the date of its Use. The horizontal illuminance readings shall be taken at the surface of the roadway.

124.52 (C) ***Standards.*** All parking facilities, exterior site areas, and private roadways to be developed in the future shall be illuminated according to the standards contained herein:

124.52 (C)(1) ***Intensity of illumination.*** The current edition of the *IESNA Lighting Handbook,* published by the Illuminating Engineering Society, is the standard to be used by the architect or engineer as a guide for the design and testing of lighting. The standards contained therein shall apply unless standards developed and adopted by this Section or subsequent amendments are more restrictive, in which case the more restrictive standards shall apply.

124.52 (C)(1)(a) For exterior parking facilities, the intensity of illumination shall provide an average maintained illumination of not less than one Footcandle equal to one lumen per square foot at grade level, and shall be well distributed in the pavement areas; however, at no point shall illumination be less than one-half Footcandle of light measured at grade level. The maximum to minimum Footcandle level shall not exceed a twelve to one (12:1) ratio and the average to minimum Footcandle level shall not exceed a four to one (4:1) ratio.

124.52 (C)(1)(b) Garage parking facilities shall provide an average intensity of illumination of not less than 50 Footcandles at the entrance area (the drive isle and any adjacent parking stalls, and from the portal or physical Building line to 60 feet inside the Structure), ten Footcandles in Traffic lanes, and five Footcandles in storage areas.

124.52 (C)(1)(c) Automatic teller machines (ATMs) shall be provided with a maintained minimum 15 Footcandles at the face and 10 Footcandles on all horizontal surfaces within 10 feet of the face of the ATM. An average horizontal illumination of three Footcandles at grade level shall be provided within a 60 foot radius of exterior units.

124.52 (C)(1)(d) Along private roadways serving new Development where inadequate or no lighting exists, developers shall be required to install Street lights with a maintained minimum of one-half Footcandle of light measured at grade level. The maximum to minimum Footcandle level shall not exceed a twelve to one (12:1) ratio and the average to minimum Footcandle level shall not exceed a four to one (4:1) ratio.

124.52 (C)(2) ***Parking facility lighting plan.*** All site plans for Buildings to be constructed after the effective date of this Section must be accompanied by a parking facility lighting plan. The lighting plan shall be certified by a licensed architect or a licensed professional engineer as providing illumination in accordance with the applicable minimum standards set forth in subsection (1) above. Subsequent Construction must comply with said lighting plan.

124.52 (C)(3) ***Automatic devices required; hours of illumination.*** All required illumination shall be controlled by automatic devices:

124.52 (C)(3)(a) For business Uses with exterior or garage parking facilities, the required illumination shall be provided at least 30 minutes after sunset until sunrise.

124.52 (C)(3)(b) Any parking facility that serves a residential Use must maintain the minimum levels of illumination established by this Section through the use of natural or artificial light 24 hours per day.

124.52 (C)(4) ***Metal halide or Light Emitting Diodes (LED) lighting only.*** The only lighting permitted shall be metal halide or LED.

124.52 (C)(5) ***Shading and screening.*** In order to minimize offensiveness to persons on neighboring property and to eliminate distractions to and temporary blinding of drivers of vehicles passing illuminated property, all artificial parking Lot or site area lighting shall

either be shaded, recessed, or screened in a manner that eliminates spillover of lighting onto adjacent property and public Rights-Of-Way. Spillover, measured at the property line, shall not exceed one-half Footcandle vertical or horizontal illumination onto adjacent properties, light measured at grade level, and shall measure zero Footcandle vertical or horizontal ten feet into adjacent property. In no case shall lighting, either pole-mounted or Building-mounted, be pointed toward the perimeter of the area being illuminated. Roof mounted lighting is prohibited.

124.52 (C)(6) ***Pole-mounted lighting.*** If lighting is pole-mounted, the following standards will apply:

124.52 (C)(6)(a)(1) 15 feet in Single-Family, two-family, cluster, and agriculturally zoned districts. 17½ feet shall be permitted for tennis court lighting on residential lots.

124.52 (C)(6)(a)(2) 22½ feet in multi-family residentially zoned districts.

124.52 (C)(6)(a)(3) 20 feet within that portion of commercial and industrially zoned districts located within 250 feet of residentially zoned property and 30 feet for those sites more than 250 feet from residentially zoned districts.

124.52 (C)(6)(b) All parking Lot lights shall be dark sky compliant shoebox-type and shall be horizontal to the ground.

124.52 (C)(7) ***Letters of compliance required.*** The lighting installation shall not be placed in permanent Use until a letter of compliance from a licensed professional engineer or architect has been provided stating that installation has been field-checked and meets the requirements as stated above.

124.52 (C)(8) ***Compliance time limits.*** All properties that have illumination standards that do not comply with this Section shall be required to be in compliance within 180 days of its adoption.

§ 124.53 STREET FRONTAGE REQUIRED.

No Lot may be built upon unless it is accessible by a designated Public or Private Right-Of-Way that is paved for vehicular and pedestrian Use and complies with the City's Engineering Standards.

§ 124.54 OFF-STREET PARKING AND LOADING.

124.54 (A) ***Off-street parking required.***

124.54 (A)(1) Every Building, Use, or Structure instituted or erected shall be provided with off-street parking facilities in accordance with the provisions of this Section for the Use of occupants, employees, visitors, or patrons.

124.54 (A)(2) All existing off-street parking facilities and all off-street parking facilities instituted shall be maintained and continued as an Accessory Use as long as the Building Use with which the off-street parking facilities are associated continues to exist.

124.54 (A)(3) When any Building is modernized, altered, or repaired, and provided there is no increase in floor area, capacity, density, or change of occupancy, no additional parking space shall be required.

124.54 (A)(4) When any Building or Use, either existing prior to the effective date of this Section or constructed or instituted subsequent to the effective date of this Section is changed in Use or occupancy, or is increased in capacity, floor area, or density, the minimum amount of off-street parking spaces required by this Section shall be provided for the Gross Floor Area occupied by any new Use or occupancy and for any increased floor area or capacity or overall density. Any such change in Use or occupancy or increase in floor area, capacity, or density shall also comply with requirements of the City Code and land Development regulations. If a site plan was approved under a prior Code that required a lesser amount of off-street parking than is currently required but excess parking was provided, then the excess parking spaces can be applied to meet the current code requirements for a proposed change of Use on all or a portion of the site plan. A tabulation of the allocation of the excess spaces will be maintained by the City. When all of the original excess spaces have been allocated, no Uses that require additional parking may be permitted without a shared parking analysis and agreement or variance approved by the City Commission.

124.54 (A)(5) It shall be unlawful for any Owner or operator of any Building, Structure, or Use affected by this Section to discontinue, change, or dispense with the required parking facilities, apart from the discontinuance, sale, or transfer of such Structure or Use, without establishing alternative vehicle parking facilities which meet the requirements of this Section. It shall be unlawful for any Person, firm, or corporation to occupy such Building or Structure for any purpose without providing the off-street parking facilities to meet the requirements of and be in compliance with this Section. Failure to maintain the required off-street parking facilities in accordance with this Section shall constitute grounds for revocation of any certificate of Use issued for Use of the premises.

124.54 (B) ***Location, character, and size.***

124.54 (B)(1) ***Location.*** The off-street parking facilities required by this Section shall be located on the same plot or Parcel Of Land such facilities are intended to serve. No parking space is permitted to be located beneath any portion of a non-residential Building that is occupied, or capable of being occupied, unless such parking space is completely enclosed by walls that match the Building face that each wall is a part of.

124.54 (B)(2) ***Size.*** Each parking space and aisle width shall not be less than the parking dimension standards depicted in the table below, "Minimum Space Requirements at Various Parking Angles for Self-Parking Facilities." If a Parking Aisle requires access for Emergency vehicles, garbage trucks, or trucks moving to or from a loading area, that Parking Aisle shall be at least 20 feet wide.

124.54 (B)(3) ***Access.*** All required parking spaces shall not be directly accessible from a public or private Street, alley, or recorded ingress and egress easement. All off-street parking areas shall be designed to permit safe maneuvering of vehicles, and each space shall be accessible without driving over or through any other parking space, loading area, or fire lane except for one-family detached Dwellings, two-family Dwellings, and Townhouses having a carport or garage as part of the Dwelling Unit. No parking space shall be designed to permit backout parking onto a Public Right-Of-Way or across a Sidewalk, pedestrian crosswalk, or other area of high pedestrian concentration. This provision shall not apply to one-family detached and two-family Dwellings and Townhouses which have an attached carport or garage as part of the Townhouse unit.

124.54 (B)(4) ***Dead end parking.*** Dead end Parking Aisles in excess of 50 linear feet shall be prohibited unless a turnaround or Cul-de-Sac adequate for Public Right-Of-Way is provided. This requirement shall not apply to residential Development.

124.54 (B)(5) ***Parking space designation.*** All required off-street parking spaces shall be clearly delineated by four-inch-wide, painted striping (white on asphalt, pavers and concrete), except for one-family detached and two-family Dwellings and Townhouse Dwellings which have an attached carport or garage as part of the Townhouse unit. Non-residential Uses in rural and agricultural districts shall require bumper guards or wheel stops in lieu of striping where unpaved parking areas are permitted. Parking stalls which abut Landscaped areas, Sidewalks, Structures, or property lines shall be designed with bumper guards, wheel stops, or contiguous curbing. The required bumper guards, wheel stops, or curbing shall be located a minimum of 2½ feet from any Landscaped area, Sidewalk, or property line. Where wheel stops are not utilized, the concrete curbing must be FDOT Type "D" or Type "F" curbing.

124.54 (B)(6) ***Garage entrances.*** No required off-street parking space may be located in front of any garage entrances or other loading area in a non-residential Building, except self-storage Warehouses. Such area may, however, be used to satisfy off-street loading requirements of this Section, providing sufficient driveway or aisle width according to the table below is provided adjacent to such Off-Street Loading Area.

124.54 (B)(7) ***Setbacks.***

124.54 (B)(7)(a) ***Non-residential.*** All driveways and Parking Aisles shall be at least five feet from any main or Accessory Buildings or Structures if curbed, and at least ten feet if uncurbed. Parking areas at the rear of industrial Uses which include or are adjacent to loading areas may be permitted if adequate protection is provided by bollards.

124.54 (B)(7)(b) ***Residential.*** All driveways and parking spaces for one-family attached and detached Dwellings on separate plots or lots of record shall be set back at least 2½ feet from any side property line. Where the driveway is flared with a radius, the Setback shall be measured from the commencement of the flare to the property line.

124.54 (B)(8) ***Drainage.*** All off-street parking facilities required by this Section shall be drained and contained within the property so as not to cause any nuisances on adjacent or

public property and shall be in accordance with the requirements of the appropriate enforcing agency.

124.54 (B)(9) ***Identification of parking lots.*** Signage shall comply with the U.S.D.O.T. *Manual on Uniform Traffic Control Devices* and all applicable sections of the City Code governing signage.

124.54 (B)(10) ***Tables and diagrams.***

MINIMUM SPACE REQUIREMENTS AT VARIOUS PARKING ANGLES FOR SELF-PARKING FACILITIES						
A	B	C	D	E	F	G
Parking Angle	Stall Width	Stall Depth	Aisle Width*	***Curb Length***	Half Bay	Full Bay
*0°	9.0 ft.	9.0 ft.	12.0 ft.	23.0 ft.	21.0 ft.	30.0 ft.
2.0°	9.0 ft.	14.6 ft	11.0 ft.	26.3 ft.	25.6 ft.	40.2 ft.
22.5°	9.0 ft.	15.2 ft.	11.0 ft.	26.3 ft.	25.6 ft.	41.4 ft.
30°	9.0 ft.	16.8 ft.	12.0 ft.	18.0 ft.	28.8 ft.	45.6 ft.
40°	9.0 ft.	18.5 ft.	12.0 ft.	14.0 ft.	30.5 ft.	49.0 ft.
45°	9.0 ft.	19.1 ft.	15.0 ft.	12.7 ft.	34.1 ft.	53.2 ft.
50°	9.0 ft	19.6 ft.	15.0 ft.	11.7 ft.	34.6 ft.	54.2 ft.
60°	9.0 ft.	20.1 ft.	18.0 ft.	10.4 ft.	38.1 ft.	58.2 ft.
70°	9.0 ft.	20.0 ft.	19.0 ft.	9.6 ft.	39.0 ft.	59.0 ft.
75°	9.0 ft.	19.7 ft.	22.0 ft.	9.3 ft.	41.7 ft.	61.4 ft.
80°	9.0 ft.	19.3 ft.	24.0 ft.	9.1 ft.	43.3 ft.	62.6 ft.
90°	9.0 ft.	18.0 ft.	24.0 ft.	9.0 ft.	42.0 ft.	60.0 ft.
* Dimensions are for one-way direction movement. Two-way direction movement requires a minimum of 24 feet in width regardless of parking angle and dimensions given.						

124.54 (C) ***Drive-Through facilities.***

124.54 (C)(1) Stacking within any Public Right-Of-Way or primary accessway shall be prohibited.

124.54 (C)(2) Egress from a Drive-Through lane onto a Public Right-Of-Way shall be prohibited.

124.54 (C)(3) Businesses that provide a Drive-Through service are required to provide Drive-Through service lanes or stacking spaces for stacking or queuing, as separate and distinct lanes from the circulation lanes necessary for entering or exiting the plot.

124.54 (C)(4) Each Drive-Through lane or stacking space shall be separated from other On-Site lanes or aisles. Each such Drive-Through lane or stacking space shall be curbed, striped, marked, or otherwise distinctly delineated.

124.54 (C)(5) Drive-Through lanes leading to or from gasoline pumps or pump islands shall provide a minimum width of 16 feet for one-way entrance and exit. All Drive-Through lanes which lead to two gasoline pump islands shall provide a minimum of 24 feet from curb to curb between pumps or pump islands.

124.54 (C)(6) All Drive-Through bank facilities shall provide a minimum nine-foot-wide vehicular service position between each Drive-Through teller facility.

124.54 (C)(7) A separate and distinct escape lane shall be provided if necessary to prevent entrapment of vehicles on that portion of the site if no other reasonable point of egress is available other than through the Drive-Through Facility. An escape lane shall not be required if the Drive-Through lane is designed and located in such a way as to be segregated from the normal Traffic flow of the site, and signed appropriately to prevent accidental entry.

124.54 (C)(8) Drive-Through lanes or stacking spaces shall not conflict or otherwise hamper access to or from any parking space or loading space.

124.54 (C)(9) Pedestrian walkways shall be clearly separated from Drive-Through lanes or stacking spaces.

124.54 (C)(10)Except for Drive-Through bank facilities and gasoline pump island Drive-Through lanes as specified above, any other drive-through lane or stacking space is hereby defined as being ten feet wide by 22 feet in length.

124.54(C)(11)Inbound Drive-Through lanes or stacking spaces shall be counted from the first stopping point. Outbound Drive-Through lanes or stacking spaces shall be counted from the last stopping point.

124.54(C)(12) The required amount of stacking spaces shall be as described in subsection (K)(2) of this Section. Any business not listed in the subsection "Amount of off-street parking" shall have the same requirements as the most similar Use described therein as determined by the City.

124.54 (D) ***Plans.*** Engineering plans signed and seated by a Florida registered professional Engineer shall be submitted with every application for a permit or Development Order for a new Building, an addition to an existing Building, or for a change in the Use of any existing Building or plot of land required to provide off-street parking under this Section, which plan shall clearly and accurately designate the required parking spaces, access aisles and driveways, and

relation to the Uses or Structures these off-street parking facilities are intended to serve. An off-street parking data box on the site plan shall list the project's off-street parking provided in reference to the satisfaction of all off-street parking regulations of this Section including proposed Building and site usage and parking totals showing required versus provided.

124.54 (E) ***Calculating required parking.***

124.54 (E)(1) ***Uses not specifically mentioned.*** The parking requirements for Uses not specifically mentioned shall be the same as provided in this Section for the most similar Use as determined by the City.

124.54 (E)(2) ***Fractional spaces.*** When units or measurements determining the total number of required off-street parking spaces result in a fractional space, any such fraction shall require a full off-street parking space.

124.54 (E)(3) ***Mixed Uses.*** In the case of mixed Uses, the total requirement for off-street parking spaces shall be the sum of the various Uses computed separately.

124.54 (E)(4) ***Gross Floor Area Measurement.*** Gross Floor Area shall mean the Gross Floor Area inside the exterior walls. In stadiums, sports arenas, religious facilities, bars, and other places of assembly in which occupants utilize benches, pews, stools, chairs, or other similar seating facilities, every 2 lineal inches of such seating shall be counted as one seat for the purpose of computing off-street parking requirements.

124.54 (F) ***Shared parking.***

124.54 (F)(1) Properties owned by a single entity or subject to a cross access/cross parking agreement may apply to the City for approval of shared parking. The application for shared parking shall include an independent parking study in a form acceptable to the City which includes but is not limited to information indicating that the Uses are such that a sufficient disparity in peak demand for parking spaces exists to support the concept of shared parking.

124.54 (F)(2) Required parking spaces may be permitted to be utilized for meeting the parking requirements of two or more separate permitted Uses when it is clearly established by the Applicant that the two or more Uses will utilize the spaces at different times of the day, week, month, or Year. A recordable covenant, with the correct legal description, shall be submitted by the owners of the property and the two or more businesses or Tenants involved in a form acceptable to the office of the City Attorney. The covenant shall be recorded in the public records of Broward County at the Applicant's expense, and shall run with the land. The covenant shall provide that the Use or portion of a Use that requires the shared parking in order to obtain the necessary permits or licenses shall cease and terminate upon any change in their respective schedules of operation that results in conflicting or overlapping usage of the parking facilities, and no non-residential Use may be made of that portion of the property until the required parking facilities are available and provided. The covenant shall also provide that the City may collect attorney's fees if litigation is necessary to enforce the requirements of this Section.

124.54 (F)(3) No part of an off-street parking area required for any Building or Use by this Section shall be included as a part of an off-street parking area similarly required for another Building or Use unless the type of Use indicates that the periods of usage will not overlap or be concurrent with each other as determined by the City.

124.54 (F)(4) Site plan amendments that involve a change in Use. In order to ensure that there is adequate parking within the City, certain development are required to prepare a shared parking analysis prior to site plan approval. If such a development submits an application for a site plan amendment, which proposes to change 20% or more of the square footage of the approved Uses within the development to a more intense Use, a new shared parking analysis shall be required prior to approval of the site plan amendment.

124.54 (G) ***Combined off-street parking.*** Nothing in this Section shall be construed to prevent collective provision for, or joint Use of, off-street parking facilities for two or more Buildings or Uses by two or more owners or operations, provided that the total of such parking spaces when combined or used together shall not be less than the sum of the requirements of the several individual Uses computed separately in accordance with this Section. In such cases, a recorded agreement shall be executed at the Applicant's expense.

124.54 (H) ***Parking for disabled persons.*** All applicable state and federal laws relating to parking spaces for certain disabled persons in all public and private parking areas, including minimum dimensions, requirements, location, and posting of Signs, shall be adhered to on all proposed developments and parking facilities which require revisions.

124.54 (I) ***Amount of off-street parking.***

124.54 (I)(1) The following minimum amounts of off-street parking shall be provided for all Buildings and Uses:

USE	MINIMUM PARKING SPACES REQUIRED
Adult Bookstore/Adult Novelty Store/Adult Video Store	1/200 sq. ft. of GFA
Adult Dancing Establishment Adult Theater	1/30 sq. ft. of GFA serving public **plus** 1/50 sq. ft. of remaining floor area
Adult domination/submission parlor/massage establishment/encounter studio/modeling studio	1/50 sq. ft. of GFA 1/200 sq. ft. of GFA
Amusement Center, game room, billiard center	1/200 sq. ft. of Gross Floor Area (GFA)
Animal hospital	1/150 sq. ft. of GFA

USE	MINIMUM PARKING SPACES REQUIRED
Auto repair	4 per service position **plus** 1 per 600 sq. ft. of separate parts storage floor area plus 1/50 sq. ft. of all other square footage
Bar, lounge, tavern, nightclub	1/30 sq. ft. of GFA serving public **plus** 1/50 sq. ft. of remaining floor area
Bowling center	5 per lane **plus** one-half the requirement for any Restaurant, bar, or lounge area
	1/200 sq. ft. of GFA
Cemetery chapel	1/50 sq. ft. of GFA
Child Care Facility	1 per classroom **plus** 1 per 400 sq. ft. of GFA not part of any classroom
Community Center, library	1/200 sq. ft. of Gross Floor Area (GFA)
Convenience Store	1/50 sq. ft. of GFA
Food processing or bottling establishment	1/500 sq. ft. of GFA
Funeral home	1 space for each 4 seats, minimum 25 spaces
Golf course, private (play limited to members and their guests only [$1,000/yr. minimum membership fee])	4 per golf green 1 space per practice tee **plus** 1/200 sq. ft. of GFA for clubhouse, pro shop, Restaurant, (all other Accessory Uses per Code requirements for particular Use)
Golf course, public	4 per golf green 1 space per practice tee **plus** 1/200 sq. ft. of GFA for clubhouse, pro shop, (all other Accessory Uses per Code requirements for particular Use)
Government office, bank, financial institution	1/200 sq. ft. of GFA
Gym, fitness center	1/150 sq. ft. of GFA
Hospital	1 per patient bed **plus** 1 per 1,000 sq. ft. of GFA
Hotel/Motel	1.1 per room **plus** 65% of the required amount of parking specified in this Section for other Uses operated in conjunction with and as part of a Hotel/Motel
Manufacturing, assembly, general industrial	1/400 sq. ft. of GFA **plus** 1/250 sq. ft. for accessory offices or showroom
Medical, dental, chiropractic, and similar, excluding psychiatrist or psychologist	1/150 sq. ft. of GFA

USE	MINIMUM PARKING SPACES REQUIRED
Movie Theater	One (1) parking space for each three (3) seats
Nursing home, residential care facility	1 space per 2 beds **plus** 1/250 sq. ft. for office and administration
Office, Business and professional Office, Call center Office, Real Estate	1/200 sq. ft. of GFA 1/50 sq. ft. of GFA 1/50 sq. ft. of GFA
Places of public assembly	1 per 3 fixed seats **plus** 1/150 sq. ft. of area not having fixed seats OR, if no fixed seats are provided, 1 per 100 sq. ft. of GFA
Plant nursery, free form or other crops	3 spaces minimum
Post office, courier service	1/50 sq. ft. of customer service area **plus** 1/200 sq. ft. of remaining floor area
Private club or lodge	1/200 sq. ft. of Gross Floor Area (GFA)
Psychiatrist or psychologist office	1/200 sq.ft.
Research or testing laboratory	1/400 sq. ft. of GFA
Residential, Multi-family	1 space per bedroom + 1 additional space per unit
Residential, One-family detached	2 per unit
Residential, Two-family Dwelling	2 per unit
Restaurant (no Bar Area)	Greater of 1/100 sq. ft. of GFA or 1 per 2 seats (applies to both indoor and Outdoor seating areas)
Restaurant with BarArea	Greater of 1/30 sq. ft. of total Bar Area 1/100 sq. ft. of remaining Restaurant GFA or 1 per 2 seats plus 1/30 sq. ft. of total Bar Area (applies to both indoor and Outdoor areas)
Retail plant nursery, open air produce market	1/1000 sq. ft. of display area open to public
Retail stores, personal service shops not otherwise specified	1/200 sq. ft. of GFA
School, Art, musical, dance, or martial arts,	1/200 sq. ft. of GFA
School, colleges public or private, trade or vocational	2 per classroom, **plus** 1 per each student of max. design capacity, **plus** 1 per 200 sq. ft. of GFA not accounted for in classroom or hallway areas

USE	MINIMUM PARKING SPACES REQUIRED
School, preschool, elementary and middle	1 per classroom, **plus** 1 per 200 sq. ft. of GFA not accounted for in classroom or hallway areas
School, Senior high	1 per classroom 1 per each 3 students of maximum design capacity **plus** 1/400 sq. ft. of auditorium or assembly area
Self storage Warehouse	1/1500 sq. ft.
Skating rink/dance hall	1/150 sq. ft. of GFA
Sports court	2 per court **plus** parking as required for other Uses on- site
Storage and distribution Warehouse	1/750 sq. ft. of GFA under 40,000 sq. ft., 1/1,000 sq. ft. of GFA over 40,000 sq. ft. (**plus** accessory offices @ 1/250 sq. ft. for all office finish over 20% of GFA)
Supermarket/grocery store	1/150 sq. ft. of retail sales area
Swimming pool facilities	1/50 of water area plus 1/100 sq. ft. of all other GFA
Take out Restaurant	1/150 sq. ft. of Gross Floor Area (GFA)
Telephone exchange, other Buildings housing equipment where no customers are served	1/500 sq. ft. of GFA
Time-share	1.5 per unit **plus** 1 per 10 units for staff

124.54 (J) Stacking spaces necessary per service position or drop-off point for the provision of this Section shall be determined using the following table:

TYPE OF FACILITY	INBOUND VEHICLES	OUTBOUND VEHICLES
Bank	6	1
Beverage, food	6	1
Dry cleaning	3	1
Attendant car wash	10	6
Automatic car wash	6	4

TYPE OF FACILITY	INBOUND VEHICLES	OUTBOUND VEHICLES
Automatic car wash as Accessory Use	3	2
Gasoline/diesel fuel pump island	4	1
Day care center	3	3
Skating rink	3	3
Elementary, middle, or high school	6	4
All other facilities	4	2

124.54 (K) ***Off-street loading.***

124.54 (K)(1) On the same plot with every Structure or Use specified herein which is hereafter erected or created, there shall be provided and maintained adequate space for loading and unloading of materials, goods, or things, and for delivery and shipping, so that vehicles for these services may Use this space without interfering with the public Use of Streets, alleys, and off-street parking areas by pedestrians and vehicles.

124.54 (K)(2) Where any Structure is enlarged or any Use is extended so that the size of the resulting occupancy comes within the scope of this Section, the full amount of off-street loading space shall be provided and maintained for the Structure or Use in its enlarged or extended size. Where the Use of a Structure or land or any part thereof is changed to a Use requiring off-street loading space under this Section, the full amount of off-street loading space shall be provided and maintained to comply with this Section.

124.54 (K)(3) For the purpose of this Section, an off-street loading space shall be an area at the grade level at least 12 feet wide by 45 feet long with a 14-foot vertical clearance, except that for plots containing an aggregate amount of less than 10,000 square feet of Gross Floor Area of Buildings, and except for office Buildings and banks, an off-street loading space may be 12 feet in width by 25 feet long. Each off-street loading without crossing or entering any other required off-street loading space shall be clearly marked as to purpose, and shall be arranged for convenient and safe ingress and egress by motor truck and/or trailer combination. Off-street loading spaces shall not be located in a Parking Aisle and shall not be more than 30 feet from the Building which the off-street loading space serves. Any pedestrian walkway crossing ingress and egress to an off-street loading space shall be clearly marked.

124.54 (K)(4) Off-street loading spaces shall be provided and maintained in accordance with the following schedule:

124.54 (K)(4)(a) For each retail complex, storage Warehouse excluding self-storage Warehouses, wholesale establishment, industrial plant, factory, freight terminal, Restaurant, mortuary, laundry, office Building, dry cleaning establishment, bank or similar Use which has an aggregate Gross Floor Area of:

GROSS FLOOR AREA (sq. ft.)	SPACES
2,000 but not over 20,000	1
20,001 but not over 60,000	2
60,001 but not over 120,000	3
120,001 but not over 200,000	4
200,001 but not over 290,000	5
Plus one for each additional 90,000 sq. ft. (or portion thereof) over 290,000 sq. ft.	1

124.54 (K)(4)(b) For each auditorium, convention hall, exhibition hall, museum, hotel, sports arena, stadium, hospital, or similar Use which has an aggregate Gross Floor Area of:

GROSS FLOOR AREA (sq. ft.)	SPACES
Over 20,000 but not over 40,000	1
Plus one for each additional 40,000 sq. ft. (or portion thereof) over 40,000 sq. ft.	1

124.54 (K)(4)(c) For any Use not specifically mentioned in this Section, the requirements for off-street loading for a Use which is so mentioned and to which the unmentioned Use is similar shall apply. One-family and two-family Dwellings and multiple-family Dwellings are not required to provide off- street loading facilities.

124.54 (K)(5) Off-street loading facilities supplied to meet the needs of one Use shall not be considered as meeting off-street loading needs of any other Use.

124.54 (K)(6) No area or facility supplied to meet the required off-street parking facilities for a Use shall be utilized for or be deemed to meet the requirements of this Section for off-street loading facilities.

124.54 (K)(7) Nothing in this Section shall prevent the collective, joint, or combined provision of off-street loading facilities for two or more Buildings or Uses on the same site, provided that such off-street loading facilities are equal in size and capacity to the combined requirements of the several Buildings or Uses and are so located and arranged as to be usable thereby.

124.54 (K)(8) Plans for Buildings or Uses requiring off-street loading facilities under the provisions of this Section shall clearly indicate the location, dimensions, clearances, and access of all such required off-street loading facilities.

124.54 (K)(9) All off-street loading facilities shall be located on the plot which they are intended to serve.

§ 124.55 OUTDOOR STORAGE.

All businesses that store materials, work in progress, finished products, machinery or equipment outside of an enclosed Building shall be required to obtain special exception approval. All Outdoor storage shall be indicated on a site plan and buffered from adjacent properties in accordance with the requirements of the Code. If Outdoor storage is present but not reflected on an approved site plan or added to an existing Building, a new site plan or site plan amendment is required.

124.55 (A) ***Generally.*** The establishment of Outdoor storage may be permitted when it can be done in harmony with the surrounding properties. To provide for its appropriateness, site standards are identified for Outdoor storage. The objectives of these standards are as follows:

124.55 (A)(1) To minimize the impact of the proposed storage area; and

124.55 (A)(2) To maintain architectural compatibility with the main Structure.

124.55 (B) ***Standards.***

124.55 (B)(1) Must be fully screened from view;

124.55 (B)(2 Screening must be architecturally compatible with the main Structure;

124.55 (B)(3) Height of screening may not exceed main Structure;

124.55 (B)(4) Parking must be provided for the enclosure at the same rate as required for the Use of the main Structure; and

124.55 (B)(5) All Setback requirements of the district where the Use is located apply.

§ 124.56 USE OF PREMISES WITHOUT BUILDINGS.

Uses without Buildings shall maintain the required Setbacks in the applicable zoning district.

§ 124.57 USE OF RESIDENTIALLY ZONED LAND FOR ACCESS.

No residentially zoned land shall be used for driveway or vehicular access purposes to any other plot that is non-residentially zoned unless specifically permitted by the City Commission following a public hearing.

ADMINISTRATION AND ENFORCEMENT

§ 124.60 GENERAL PROVISIONS.

124.60 (A) Unless otherwise required by law, no license or permit shall be issued by any department, agency or official of the City for the Use of any premises or the operation of any business, enterprise, occupation, trade, profession or activity that would involve or constitute a violation of these zoning regulations.

124.60 (B) ***New Construction or Use of land***. The construction of any new Building or Structure or the initiation of any Use of presently unused property shall conform to all of the applicable provisions of these zoning regulations.

124.60 (C) ***Additions to an existing Building***. Additions to an existing Building shall comply with the provisions of these zoning regulations

124.60 (D) ***Rehabilitation of existing Buildings***. The rehabilitation of an existing Building shall comply with the provisions of these zoning regulations.

124.60 (E) ***Change of Use for existing Building and/or land***. Any change of the Use of a Building or property shall comply with the provisions of these zoning regulations.

§ 124.61 ENFORCEMENT.

The City Manager shall assign the responsibility of enforcement and implementation of the provisions of these zoning regulations to the appropriate employees or agents of the City.

§ 124.62 PROCEDURES FOR A TEXT CHANGE OR ZONING DISTRICT CHANGE.

124.62 (A) A petition for change of text or zoning district may be submitted by any of the following:

124.62 (A)(1) City Commission;

124.62 (A)(2) City Manager;

124.62 (A)(3) City Attorney; or

124.62 (A)(4) An Owner of property in the City.

124.62 (B) All petitions shall be on forms provided by the City Manager.

124.62 (C) Public notice shall be provided consistent with the requirements stated in the land Development code.

124.62 (D) ***Review criteria***: In order to approve a text amendment or change of zoning district the City Commission must find that the petition complies with each of the following

criteria. The Applicant is required to provide a report at the time the petition is filed which includes documentation that the petition complies with each of the below criteria:

124.62 (D)(1) The amendment is consistent with the comprehensive plan;

124.62 (D)(2) The proposed change will result in Development that is consistent in scale and character with those within 300 feet of the site;

124.62 (D)(3) The resulting boundaries of the zoning district are logically drawn;

124.62 (D)(4) The proposed change will not reduce property values in the City;

124.62 (D)(5) The proposed change will enhance the quality of life in the City; and

124.62 (D)(6) There are substantial and compelling reasons why the proposed change is in the best interests of the City.

§ 124.63 ZONING AND PLANNING APPLICATION FEES.

The City Commission is hereby authorized to impose fees for the filing and processing of zoning and planning applications, including applications for variances, special exceptions, rezoning, appeals of administrative interpretations and other zoning related services and all amendments thereto provided by the City Manager. Such fees shall be set and may be amended from time to time by resolution of the City Commission.

§ 124.64 TEMPORARY OR PERMANENT TAKING OF PRIVATE PROPERTY OR VESTED RIGHTS.

124.64 (A) Nothing in this Chapter or Chapter 125 shall be construed or applied to constitute a temporary or permanent taking of private property without just compensation or the abrogation of vested rights. Any property Owner alleging that this Chapter or Chapter 125, as applied, constitutes or would constitute a temporary or permanent taking of private property or of an abrogation of vested rights must affirmatively demonstrate the legal requisites of the claim and may not pursue such a claim in court or before the City Commission, unless he or she has first exhausted the remedies as provided in this Section.

124.64 (B) Prior to pursuing a claim in court or before any argument is made or evidence is presented to the City Commission regarding an alleged taking of private property or an abrogation of vested rights, the property Owner shall file an application with the City Manager for a takings or vested rights determination. The application shall be accompanied by a fee as set by resolution of the City Commission and contain a sworn statement as to the basis upon which the alleged taking or vested rights are asserted. The City Commission, after a public hearing, shall make a written determination as to whether the property Owner has established a temporary or permanent taking of private property or an abrogation of vested rights.

§ 124.65 DETERMINATION OF USES NOT LISTED.

When a requested Use is not specifically listed as either a permitted Use, prohibited Use or special exception in a zoning district the City Manager shall determine, based upon the character

and intensity of the Use, to which listed Use (permitted, prohibited or special exception) it is most similar and shall treat the requested Use in the same manner as the similar Use.

§ 124.66 BUILDING PERMITS.

All applications for Building permits shall be accompanied by a plan drawn to scale showing the actual dimensions of the Lot to be built upon, the size of the Structure to be erected, the Setback lines observed, and such other information as may be requisite and necessary to provide for the enforcement of these regulations.

§ 124.67 CERTIFICATE OF OCCUPANCY OR CERTIFICATE OF COMPLETION.

No land shall be occupied or used and no Building erected or altered shall be occupied or used in whole or in part for any purpose whatsoever until a Certificate Of Occupancy, a temporary Certificate Of Occupancy or certificate of completion shall have been issued by the Chief Building Official, stating that the premises or Building complies with all the provisions of these regulations and the applicable codes.

§ 124.68 CERTIFICATES OF USE.

124.68 (A) ***Generally.*** No Use for which a Business Tax Receipt is required shall be commenced in any zoning category or district unless a certificate of Use has been issued indicating that the proposed Use is a permitted Use within the district or zoning category, and that the proposed occupancy is similar in nature, function or operation to the Uses as categorized by the Florida Building Code as most recently adopted. An inspection shall be required prior to the issuance of a certificate of Use, except that no inspection shall be required for a Home Occupation, provided that an affidavit affirming compliance with § 80.01 of the Code is submitted to the City, on a form approved by the City Manager. It is a violation of this Section and punishable as provided in § 2.99 of this Code to falsify the affidavit.

124.68 (B) ***Posting required.*** The original of the certificate of Use shall be posted in a conspicuous location accessible to the public on the business premises at all times.

124.68 (C) ***Fees.*** Fees for certificates of Use shall be set by the City Commission by resolution.

124.68 (D) ***Revocation.*** The City Manager shall notify the holder of any certificate of Use, in writing, of the City's intent to revoke a certificate of Use for any of the following reasons:

124.68 (D)(1) The City has reasonable grounds to believe that the premises are being used in a manner that is inconsistent with, or contrary to, the provisions of the City Code or any other applicable code or statute.

124.68 (D)(2) In the event of a conviction of any Owner, operator, manager, supervisor, or any employee acting at the direction or with the knowledge of the Owner, operator, manager, or supervisor, by a court of competent jurisdiction, for the violation of any criminal statute committed in conjunction with the business operation.

124.68 (D)(3) It has been ascertained that the holder of the certificate of Use falsified any information on the application for the certificate of Use.

124.68 (D)(4) The holder of the certificate of Use, or the holder's designated manager, operator, or supervisor, refuses to permit an authorized law enforcement officer or code enforcement officer to inspect the premises during normal business hours for the purpose of investigating a complaint which has been filed against the business operation.

124.68 (E)(1) The notice shall state the following:

THE HOLDER OF THE CERTIFICATE OF USE SHALL HAVE TEN (10) DAYS FROM THE DATE OF THIS NOTIFICATION TO EITHER BRING THE PREMISES INTO COMPLIANCE OR TO REQUEST A HEARING, IN WRITING, BEFORE THE CITY COMMISSION.

IF THE VIOLATION IS NOT CURED OR IF NO WRITTEN REQUEST FOR A HEARING IS RECEIVED BY THE CITY OF WESTON WITHIN TEN (10) DAYS OF THE DATE OF THIS NOTIFICATION BY THE CERTIFICATE HOLDER, THE CERTIFICATE OF USE SHALL BE CONSIDERED REVOKED.

124.68 (E)(2) If the holder of the certificate of Use requests a hearing before the City Commission, the certificate of Use shall remain in effect during the pendency of the action before the City Commission.

§ 124.69 APPEAL OF A CITY ADMINISTRATIVE DECISION.

Any substantially affected Person may appeal an order, decision or interpretation in the enforcement of the regulations of this Chapter and Chapter 125 subject to the following:

124.69 (A) The appeal shall be in writing, specifying the grounds thereof on forms as provided by the City Manager.

124.69 (B) The appeal shall be filled with the City Manager within 30 days of the date the administrative decision is made.

124.69 (C) The City Commission shall hear and rule upon the appeal after a public hearing.

124.69 (D) Public notice, as required by § 125.06, shall be provided of the hearing at which the appeal will be heard.

VARIANCES AND SPECIAL EXCEPTIONS

§ 124.80 VARIANCES.

124.80 (A) In specific cases where the literal and strict enforcement of the applicable provisions of these Land Use Regulations or other regulations or provisions of this Code would result in undue or unnecessary hardship, the City Commission may grant a petition for variance

from said regulations as will provide substantial justice and not be contrary to the public interest reflected in said regulations, provided the City Commission makes the following findings:

124.80 (A)(1) The subject property has unique and special conditions, not applying generally to other properties in the same zoning district, which occasion the necessity for the petitioned variance.

124.80 (A)(2) The Development resulting from the granting of such variance shall be in harmony with the policies embodied within the City Comprehensive Plan.

124.80 (A)(3) The granting of such variance shall be consistent with the general purpose and intent of the applicable zoning district regulations governing the property on which approval is granted.

124.80 (A)(4) The granting of such variance shall not adversely affect the Use or Development of neighboring properties in accordance with the applicable zoning district regulations nor hinder or discourage appropriate Development and Use of adjacent or nearby land and/or Buildings or impair the value thereof.

124.80 (A)(5) The literal and strict enforcement of the applicable provisions of the Land Use Regulations or other provisions of the City Code would result in undue or unnecessary hardship to the Applicant and would deprive the Applicant of rights commonly enjoyed by the owners of other property in the zoning district.

124.80 (A)(6) The granting of the requested variance will provide substantial justice and not be contrary to the public interest as reflected in the applicable regulations.

124.80 (A)(7) The need for the variance does not arise from conditions that are personal to the Owner but instead relate to the uniqueness of the property.

124.80 (A)(8) The alleged hardship is not self-imposed by the Owner, prior owners or by any Person having an interest in the property.

124.80 (A)(9) The variance granted is the minimum variance necessary for the Applicant to make reasonable Use of the property.

124.80 (B) It is the responsibility of the Applicant to submit documentation that addresses the above criteria. The Applicant shall have the burden of proof which shall include the burden of going forward with the evidence and the burden of persuasion on all questions of fact which are to be determined by the City Commission.

124.80 (C) The City Commission may require appropriate conditions, stipulations, and safeguards as conditions of granting any variances. A violation of these conditions, stipulations, and safeguards shall be deemed a violation of the Code.

124.80 (D) A variance of the Use or density provisions of these Land Use Regulations is prohibited.

124.80 (E) A variance from the provisions of the Sign Chapter shall be granted to the specific Sign for which the variance has been sought and shall not run with the land. However, all other variances granted pursuant to this Section shall run with the land and are not personal to the Owner of the subject property, and conditions personal to said Owner and not relating to the uniqueness of the subject property shall not be a valid basis for such variances. Further, the lack of objections from surrounding property owners, while persuasive, should be judged in light of the fact that all future surrounding property will be subject to the permitted variance.

§ 124.81 SPECIAL EXCEPTIONS.

124.81 (A) Certain Uses are listed as special exceptions and are permitted in zoning districts subject to the approval of the City Commission. These Uses are considered basically suitable for the districts in which listed, but the character and nature of the Uses are such that they may necessitate controls and safeguards on the manner of establishment and operation which, by being determined by the City Commission at public hearing, would better serve the interests of the community and the owners of the property in question.

124.81 (B) Applications for special exception shall be reviewed by the City Commission. All special exceptions will be reviewed based on the following criteria:

124.81 (B)(1) The Use is compatible with the existing natural Environment and other properties within the vicinity.

124.81 (B)(2) There will be adequate provision for safe Traffic movement, both vehicular and pedestrian, both internal to the Use and in the area which will serve the Use.

124.81 (B)(3) There will be adequate Setbacks, buffering, and general amenities in order to control any adverse effects of noise, light, dust, or other potential nuisances.

124.81 (B)(4) The land area is sufficient, appropriate, and adequate for the Use as proposed.

124.81 (B)(5) The proposed special exception Use shall disclose the square feet of Use sought for approval so that an adequate evaluation can be made of the special exception Use in keeping with the standards and criteria of this Chapter. Should any special exception Use seek to expand in size, the extent of expansion shall undergo special exception Use review as provided in this Chapter.

124.81 (B)(6) It is the responsibility of the Applicant to submit documentation that addresses the above criteria. The Applicant shall have the burden of proof which shall include the burden of going forward with the evidence and the burden of persuasion on all questions of fact which are to be determined by the City Commission.

124.81 (B)(7) Conditions may be stipulated and made a requirement in granting any application for a special exception when it is found by the City Commission to be necessary to further the purpose of the zoning district or compatibility with other property within the vicinity.

§ 124.82 RECORDATION AND EXPIRATION.

124.82 (A) ***Approval and recordation.*** Any variance or special exception approved under the terms of this subchapter shall be in the form of a resolution adopted by the City Commission and shall be recorded, at the Applicant's expense, in the public records of Broward County, and shall include verification by the enforcing official that all terms, conditions, safeguards, and time limits of the approval have been satisfied.

124.82 (B) ***Time limit.***

124.82 (B)(1)(a) ***When a site plan is required.*** Any variance or special exception authorized by the City Commission shall expire 180 days after the date of the action on such variance or special exception by the Commission unless a site plan is approved based upon and incorporating the variance or special exception; and unless all terms, conditions, and safeguards of the variance or special exception have been satisfied. Thereafter, the variance or special exception shall expire when the site plan expires.

124.82 (B)(1)(b) ***When no site plan is required.*** For those variances or special exceptions not requiring an approved site plan, they shall expire 180 days after the date of the action on such variance or special exception by the Commission unless a Building permit has been issued and unless all terms, conditions, and safeguards of the variance or special exception have been satisfied.

124.82 (B)(2) Whenever a special exception or variance application has been denied, the City Commission shall not consider any further request for substantially the same special exception or variance on the same part of the same property for a period of 12 months from the date of such action. The above time limit may be waived by an affirmative vote of the City Commission, when the City Commission deems such action necessary due to changed circumstances to prevent an injustice or to facilitate the proper Development of the City based upon evidence provided by the Applicant.

124.82 (B)(3) An Applicant seeking a waiver of the time limit for reapplication shall submit documentation substantiating the bases for the waiver of the time limitation, in a form acceptable to the City Manager, together with the application for special exception or variance. In addition to the applicable fees for the special exception or variance application, there shall be an additional fee for the hearing on the waiver of time limits. Upon receipt of all of the above by the City Manger, the request for waiver of time limits shall be placed on the next available regular City Commission agenda, but not earlier than 60 days after the original special exception or variance application was heard. If the waiver of time limit is granted, the special exception or variance application shall be heard no earlier than the next regular City Commission meeting.

CHAPTER 125. LAND DEVELOPMENT.

PART 1: ADMINISTRATION AND PROCEDURE

§ 125.01 DEVELOPMENT REVIEW REQUIRED.

An application for Development Review shall be submitted to the City prior to approval of any of the following:

125.01 (A) site plans;

125.01 (B) plats;

125.01 (C) plat amendments;

125.01 (D) rezonings;

125.01 (E) comprehensive plan amendments;

125.01 (F) special exceptions;

125.01 (G) variances; or

125.01 (H) any other Development of land requiring a permit.

§ 125.02 APPLICATIONS FOR DEVELOPMENT PERMITS.

The Owner of the property that will be developed if the permit is approved must make any application for a Development Permit required or authorized under this Chapter on forms provided by the City. If any Person or entity will be acting as agent for the property Owner, the application must clearly indicate by affidavit of the Owner that he/she or the entity has given the agent full authority to bind the Owner to any condition that may be imposed upon the issuance of the Development Permit.

§ 125.03 REVOCATION OF DEVELOPMENT PERMITS FOR MATERIAL MISREPRESENTATION OR MISTAKE.

125.03 (A) ***Generally.*** The City Manager, either on his or her own initiative or upon the request of the Mayor or a City Commissioner, shall determine whether or not a material misrepresentation or mistake, regardless of any intent to deceive, has occurred during the application or approval process of any Development Permit. Should the City Manager determine that there is a reasonable likelihood that such a material misrepresentation or mistake has occurred, and provided that it is within ten Years of the date such material misrepresentation or mistake was made, he or she shall schedule a revocation of Development Permit hearing before the City Commission.

125.03 (B) ***Revocation hearing.*** The City Commission may order the revocation of a Development Permit, at a revocation of Development Permit hearing, if the City Commission finds:

125.03 (B)(1) A material misrepresentation or mistake is contained in the application for a Development Permit; or

125.03 (B)(2) A material misrepresentation or mistake is contained in any documentation, that was provided by the Applicant or anyone on his or her behalf, supporting the application for a Development Permit; or

125.03 (B)(3) Material misrepresentation or mistake was made by the Applicant, or anyone on his or her behalf, in any oral or written presentation to the City relating to the application or approval process.

125.03 (C) ***Removal of Structure or Building.*** Should the City Commission find that a material misrepresentation or mistake was made during the application or approval process, regardless of an intent to deceive, it may order the removal of the Structure or Building that was permitted to be constructed as a result of the approval. Should the nature of the misrepresentation or mistake be such that the granting of a variance could cure it, the Owner of the Building or Structure found to be in violation of this section shall have 30 calendar days to apply for such a variance to allow the Structure to remain in place. If no variance is applied for, or the variance is denied, and at the conclusion of any applicable appeal, the City shall provide the Owner, by certified mail at the address listed in the Property Appraiser's records, with a Notice to Vacate and Demolish. Thereafter, the Building or Structure must be demolished within 90 days of the mailing of the written notice. If the Structure has not been demolished at the end of 90 days, the City may contract for the demolition, the cost of which shall be a lien against the property coequal with the lien of taxes and superior to all other liens against the property.

§ 125.04 REVIEW OF APPLICATIONS FOR DEVELOPMENT PERMITS.

No application for a Development Permit to be issued by the City for the Development of land within the City shall be reviewed, or a Development Permit issued, except in compliance with the requirements and procedures set forth in this Chapter.

125.04 (A) ***City Commission review.*** Applications for Plat approval, modifications to conditions of Plat approval, including amendments or revisions to a non-vehicular access line, amendments to, or placement of, notation on the face of the Plat; variances and special exceptions; site plans and amendments to site plans requiring City Commission action; and applications for land use plan amendments, rezoning, and DRI Development Orders shall be subject to City Commission review. An application for a Development Permit requiring City Commission review shall comply with the following:

125.04 (A)(1) The applicable provisions of this Chapter.

125.04 (A)(2) The applicable provisions of the zoning ordinances, and all other ordinances affecting the Development of land for Development Permit. All applications for a

Development Permit must be consistent with the zoning Chapter at the time the application is heard by the City Commission.

125.04 (A)(3) The applicable provisions of the Broward County Land Use Plan and the City of Weston Comprehensive Plan. An application for final Plat approval or an amendment to a notation on the Plat must be consistent with the Broward County and local Certified Land Use Plans at the time the application is heard by the City Commission.

125.04 (B) ***Administrative review.*** A Development Permit not requiring City Commission approval shall be subject to administrative review. All applications for Development Permits requiring administrative review shall comply with the following:

125.04 (B)(1) The applicable provisions of this Chapter.

125.04 (B)(2) The applicable provisions of the zoning ordinances, the applicable provisions of the Building Code, and all other ordinances affecting the Development of land for Development Permit.

125.04 (B)(3) The applicable provisions of the elements of the City of Weston Comprehensive Plan.

125.04 (C) ***Affidavits of Applicant.***

125.04 (C)(1) ***Applicant Representative Affidavit.*** Each individual or entity applying for a Development Permit must submit, with the application, an "Applicant Representative Affidavit." The affidavit must be on a form provided by the City and be signed by an authorized representative of the individual or entity applying for the Development Permit, and the Owner of the property subject to the application (if different), whose signatures must be notarized. The form for the affidavit shall be prepared and distributed by the City Manager and shall identify all Persons representing the individual or entity applying for the Development Permit in connection with the application, including, but not limited to, all attorneys, architects, Landscape Architects, Engineers and lobbyists. Any statement or representation made by any Person listed on the Applicant Representative Affidavit shall be binding upon the individual or entity applying for the Development Permit and the Owner of the subject property.

125.04 (C)(2) ***Business Relationship Affidavit.*** Each individual or entity applying for a Development Permit, the Owner of the property subject to the application, and each individual or entity appearing on the Applicant Representative Affidavit must submit, with the application, a "Business Relationship Affidavit." The affidavit must be on a form provided by the City and be signed by an authorized representative of individual or entity submitting the affidavit, whose signature must be notarized. The form for the affidavit shall be prepared and distributed by the City Manager and shall require the individual or entity to disclose whether it has any Business Relationships with any member of the City Commission and, if so, disclose the identity of the member with which it has a Business Relationship and the nature of the Business Relationship.

125.04 (C)(3) ***Duty to supplement affidavits.*** If, at any time prior to City Commission consideration of an application for a Development Permit, the information contained in any Applicant Representative Affidavit or Business Relationship Affidavit becomes incorrect or incomplete, the Person or entity submitting the affidavit must supplement the affidavit and, if the supplementation requires the submission of additional Applicant Representative Affidavits or Business Relationship Affidavits, ensure that such affidavits are also filed. If any supplementary affidavits are submitted less than fourteen days before the application is scheduled for consideration by the City Commission, the application may be withdrawn by the City Manager and placed on a subsequent agenda.

§ 125.05 PROCEDURES FOR DEVELOPMENT REVIEW.

Any application for a Development Permit required or authorized under this Chapter shall require a Development Order to be granted by the City Manager or the City Commission prior to issuance of the Development Permit. The following procedures shall govern the review of applications for Development Permits subsequent to filing:

125.05 (A) ***Completeness of application.*** The City Manager shall review the application for Development Permit to determine its completeness. If the application is incomplete, the Applicant shall be advised in writing as to the missing items.

125.05 (B) ***Discipline review.*** Upon acceptance of an application for a Development Permit, the City Manager shall forward a copy of the application and accompanying material to each of the following disciplines for review: Engineering, Traffic Engineering, Planning and Zoning, Fire Prevention, Public Works/Utilities, Landscaping, Survey, Building, and any other discipline, as applicable.

125.05 (C) ***Review responsibilities.*** Each reviewing discipline shall prepare a staff report which sets out in writing its comments and recommendations regarding the application for Development Permit, and shall forward such staff report to the City Manager.

125.05 (D) ***Administrative review.***

125.05 (D)(1) If the application is for Development of Single-Family units within a lotted subdivision, the application shall be subject to review by those disciplines that the City Manager deems appropriate. Within seven working days of acceptance of a completed application for Development Permit subject to administrative review, the City Manager shall make a determination, based upon required discipline reviews:

125.05 (D)(1)(a) That the application complies with the applicable standards and minimum requirements of this Chapter, in which case the City Manager shall issue a Development Order granting the application; or

125.05 (D)(1)(b) That the application is not in compliance with the applicable standards and minimum requirements of this Chapter, in which case the City Manager shall issue a Development Order denying the application.

125.05 (D)(2) A Development Order denying an application shall include a statement of the basis for denial. A Development Order granting an application with conditions shall include a statement of said conditions and the basis therefore.

125.05 (E) ***City Commission review.*** Prior to the scheduled development review meeting, the City Manager shall compile the individual staff reports, and prepare a written development review report.

125.05 (F) ***Referral of applications to City Commission.***

125.05 (F)(1) For applications subject to City Commission review, upon compliance with all conditions contained in the report, the City Manager shall submit the development review report and recommendation to the City Clerk for scheduling on the next available agenda of the City Commission.

125.05 (F)(2) If the application is subject to administrative review and the City Manager believes there is a substantial question regarding the interpretation of this chapter as it applies to the application, the City Manager may refer the matter to the City Commission for a determination.

125.05 (G) ***City Commission review: Development Order.***

125.05 (G)(1) At a regularly scheduled public meeting the City Commission shall review the application for conformity to this Chapter and shall act upon the application. The City Commission shall make one of the following determinations:

125.05 (G)(1)(a) That the application is in compliance with the applicable standards and minimum requirements of all applicable codes, in which case the City Commission shall adopt a resolution granting approval of the application;

125.05 (G)(1)(b) That the application is not in compliance with the applicable standards and minimum requirements of all applicable codes, in which case the City Commission shall adopt a resolution denying the application; or

125.05 (G)(1)(c) That the application is not in compliance with the applicable standards and minimum requirements of all applicable codes, but conditions have been determined by the City Commission to be reasonably necessary to ensure compliance with the applicable standards and minimum requirements, in which case the City Commission shall adopt a resolution granting approval of the application with said conditions.

125.05 (G)(2) In the case of land use plan amendments, rezonings, and DRI Development Orders, the City Commission shall adopt an ordinance granting approval of the application.

125.05 (H) ***Effect of Development Order.***

125.05 (H)(1) No Development Permit shall be issued except pursuant to an effective Development Order.

125.05 (H)(2) No Development Permit shall be issued for a Development which is inconsistent with the Development Order governing such Development.

125.05 (I) ***Time limitation on re-filing* of *applications.***

125.05 (I)(1) Whenever the City Commission has denied an application for a Development Permit, the City Manager shall not accept the same or substantially the same application for a period of 12 months from the date of the denial by the City Commission. The above time limit may be waived by the City Commission by an affirmative vote of four City Commissioners when the full City Commission is present, or by a unanimous vote of all City Commissioners present if less than the full City Commission is present, when the City Commission deems such an action necessary due to changed circumstances, to prevent an injustice, or to facilitate the proper development of the City based upon evidence provided by the Applicant.

125.05 (I)(2) Whenever the City Manager has denied an application for a Development Permit and that denial has not been appealed by the City Commission, the City Manager shall not accept the same or substantially the same application for a period of 12 months from the date of the denial. The above time limit may be waived by the City Manager when he/she deems such action necessary due to changed circumstances, to prevent an injustice, or to facilitate the proper development of the City based upon evidence provided by the Applicant.

125.05 (I)(3) Whenever the Applicant withdraws an application for a Development Permit:

125.05 (I)(3)(a) If the withdrawal occurs prior to the application being advertised for a Commission hearing, it may be re-filed at any time.

125.05 (I)(3)(b) If the withdrawal occurs after the application has been advertised for a Commission hearing but before the hearing begins, the City Manager shall not accept the same or substantially the same application for a period of 25 days from the date of the withdrawal.

125.05 (I)(3)(c) If the withdrawal occurs after the Commission hearing on the application has been opened, the withdrawal will be treated as a denial for the purpose of resubmission.

§ 125.06 REQUIREMENTS FOR ADVERTISING AND NOTICE .

125.06 (A) ***Applicability of provisions.*** The advertising requirements of this Section shall apply to all applications that require City Commission approval pursuant to this Chapter and Chapter 124. Advertising for such applications shall be in accordance with the requirements of Florida Statutes and the additional notice requirements set forth below.

125.06 (B) ***Mailed notice requirements.***

125.06 (B)(1) ***Notice requirements for applications related to an existing Single-Family Residence to contiguous property Owners.*** For matters heard by the City Commission relating to existing Single-Family Residences, a notice for the City Commission meeting, on a form approved by the City Manager, shall be sent to: (a) all property Owners whose property is contiguous with the property of the Applicant; and (b) all Homeowners/maintenance Associations that govern the property, if such an Association exists. The notices shall include the location, and nature of the land Development approval applied for and the date, time, and location of the City Commission meeting. The notices shall be sent by first class mail and postmarked at least ten days prior to the hearing.

125.06 (B)(2) ***Notice requirements for all other applications.*** For all applications, except for those applications relating to existing Single-Family Residences, heard by the City Commission, a notice for the City Commission meeting, on a form approved by the City Manager shall be sent to all property Owners in the City within 500 feet of the property, exclusive of road Rights-Of-Way and water bodies. Notices shall include the project title or name, location and nature of the approval or amendment applied for, and the date, time and location of the meeting. The notices shall be sent by first class mail and postmarked at least ten days prior to the hearing.

125.06 (B)(3) ***Obtaining lists for mailed notice.*** All lists of property Owners to whom notice must be mailed shall be based upon the most recently updated records available from the Broward County Property Appraiser and be obtained from the Property Appraiser no more than 30 days prior to the date of mailing.

125.06 (C) ***Signage and posting requirements.***

125.06 (C)(1) For all applications heard by the City Commission, a Sign shall be posted on the affected property at least ten days, and not more than 30 days, prior to the meeting in which the application will be heard. The Sign shall include the type of application, type of hearing, date, time, and location of the meeting, and number to call for additional information. The Sign shall be posted in a location that is clearly visible from the adjacent Right-Of-Way within ten feet of the Right-Of-Way line.

125.06 (C)(1)(a) For applications concerning existing Single-Family Residences, the Sign shall measure 24 inches by 24 inches and shall be made of a weather resistant non-paper material, set 24 inches above surrounding grade from the bottom of the Sign board. Lettering shall be in gothic style upper case with the top line measuring at least three inches in height and all other lines measuring one and one-half inches in height.

125.06 (C)(1)(b) For all other applications, the Sign shall measure 48 inches by 48 inches and shall be constructed of weather resistant non paper materials, set 36 inches above surrounding grade from the bottom of the Sign board, mounted on two 4-inch by 4-inch by 10-foot pressure-treated posts. The Sign shall be painted with a white enamel background and black enamel letters. Lettering shall be in gothic style upper case with the top line measuring at least six inches in height and all other lines measuring three inches in height.

125.06 (C)(2) Unless the City Manager determines a different address or phone number, the text of the Sign shall read as follows:

REQUEST FOR: _____

PROJECT TITLE: _____

PROPOSED USE: _____

CITY COMMISSION MEETING: DATE AND TIME

WESTON CITY HALL

17200 ROYAL PALM BOULEVARD

COMPLETE INFORMATION REGARDING THE APPLICATION IS AVAILABLE BY CONTACTING THE PLANNING DEPARTMENT AT 954-921-7781.

125.06 (C)(3) Signs must be maintained in readable condition while posted.

125.06 (D) ***Evidence of compliance.*** Evidence of compliance of all advertising and notice required by Florida Statutes and this section for the City Commission hearing must be received by the City Clerk no later than the City Hall's close of business at least five days prior to the date of the meeting in which the application will be heard. Evidence of compliance shall consist of the following:

125.06 (D)(1) Photograph of posted Sign;

125.06 (D)(2) Copy of mailed notice to adjacent and contiguous property Owners and Associations, if applicable;

125.06 (D)(3) List of adjacent and contiguous property Owners and Associations, if applicable, to whom mailed notice was sent;

125.06 (D)(4) Affidavit of mailing notice to adjacent and contiguous property Owners and Associations, if applicable, on a form approved by the City Manager; and

125.06 (D)(5) Proof of advertised legal notice, where required by Florida Statutes.

125.06 (E) ***Enforcement.*** Failure to comply with these advertising requirements will result in the hearing being rescheduled for the next available City Commission meeting that is at least 25 days from the meeting for which the advertising requirements were not met. All advertisements, notices and Signs must be reissued with the correct meeting date shown. The failure of an Applicant to satisfy the advertising requirement for the same item two consecutive times shall constitute sufficient grounds for denial of the application.

125.06 (F) ***Sign removal***. All Signs shall be removed within five days after the hearing where the City Commission takes final action on the application.

§125.07 VIOLATION OF DEVELOPMENT PERMITS AND DEVELOPMENT ORDERS.

The violation of any provision of a Development Permit, or condition placed upon a Development Order, issued by the City shall constitute a violation of the City Code.

PART 2: STANDARDS

§ 125.10 DEVELOPMENT REVIEW REQUIREMENTS.

An application for a Development Permit must comply with the requirements of this subchapter.

§ 125.11 ADEQUACY OF REGIONAL ROAD NETWORK.

The adequacy of the Regional Road Network shall be determined in accordance with the applicable provisions of the Broward County Land Development Code.

§ 125.12 ADEQUACY OF THE LOCAL ROAD NETWORK.

125.12 (A) ***Generally.*** The adequacy of the Local Road Network shall be determined in accordance with the provisions outlined in (B) below, the City *Transportation Concurrency and Traffic Performance Standards*.

125.12 (B) ***Transportation Concurrency and Traffic performance standards.***

125.12 (B)(1) ***General provisions.*** It is the intent of the City to ensure that adequate transportation facilities and Traffic Control Devices are provided throughout the community to support existing and proposed Development, and to ensure that such facilities are in place concurrent with the impacts of such Development. To the extent permitted by the City Charter and other Laws governing this topic, the City shall initiate actions and enact standards and policies within its jurisdiction to protect the safety and welfare of the motoring public, even if such actions, standards, or policies are more restrictive than the requirements of other governmental agencies. These actions may include, but are not limited to, the following: adoption and enforcement of level of service standards; establishment of local Concurrency and Traffic performance standards; adoption of Traffic impact guidelines and review requirements for site-specific Development applications; and adoption of mechanisms to assess property Owners a fair-share cost of providing the transportation facilities necessary to serve the proposed Development. These standards, policies, and guidelines shall be adopted and implemented as part of the City Code, the City's Local Comprehensive Plan and the City's land Development regulations, as appropriate.

125.12 (B)(2) ***Level of service (LOS) standards.*** The average annual daily and peak hour level of service (LOS) standard for all Roadways functionally classified as "State or county Arterials," "county collectors," "City collectors," "unclassified Roadways," or "local

Roadways" within the City shall be LOS "D" or better. The level of service standard for all "limited access Highways" and "controlled access Highways" on the Florida Intrastate Highway System (FIHS) located within the City shall be LOS "D" consistent with the Statewide Minimum Level of Service Standards. The peak hour level of service standard for all intersections within the City shall be LOS "D" or better overall, with no individual intersection approach operating below LOS "E." Level of service determinations shall be based on criteria outlined in the most current version of the Quality/Level of Service Handbook, published by the Florida Department of Transportation, and the most current version of the *Highway Capacity Manual, Special Report 2000,* published by the Transportation Research Board of the National Academies, Washington, D.C. The term "peak hour" used herein refers to the "100th highest hour" as outlined in the Quality/Level of Service Handbook.

125.12 (B)(3) ***Development subject to transportation Concurrency determination.***

125.12 (B)(3)(a) ***Generally.***

125.12 (B)(3)(a)(1) The following types of Development applications shall be subject to Concurrency review: All Development applications subject to approval or permitting by the City. For Development Permits requested on land platted prior to March 20, 1979, the City will be responsible for making the final transportation Concurrency determination.

125.12 (B)(3)(a)(2) Transportation Concurrency shall only be considered vested for Plats approved by Broward County between March 20, 1979, and October 1, 1989, provided there is no replat. Otherwise the Plat shall be subject to Concurrency review.

125.12 (B)(3)(b) ***Exemptions.*** The following Developments shall be considered conditionally exempt from City transportation Concurrency review:

125.12 (B)(3)(b)(1) Developments which have been determined by the City to have vested rights with regard to surrounding transportation facilities in accordance with the provisions of Florida Statutes Chapter 163, Part II.

125.12 (B)(3)(b)(2) Developments which are specifically authorized as a Development of Regional Impact (DRI) or Florida Quality Development (FQD) pursuant to Florida Statutes Chapter 380, which have been issued a final local Development Order either prior to the adoption of the 1989 Broward County Comprehensive Plan, or after being reviewed for satisfaction of the Broward County Transportation Concurrency Standards on or prior to September 3, 1997.

125.12 (B)(3)(b)(3) Developments which are comprised of one Single-Family Dwelling or Duplex. Any Single-Family Dwelling or Duplex which is demolished shall be considered vested if a similar Dwelling Unit is approved through plan review and is constructed within 18 months of demolition.

125.12 (B)(3)(b)(4) Developments which are public facilities which the City Commission has determined to be essential to the safety, welfare, or critical functions of the City.

125.12 (B)(4) ***Determination of project adequacy.*** For the purpose of the issuance of Development Orders and Development-related Permits, the burden shall be placed upon the Applicant to demonstrate compliance with the following:

125.12 (B)(4)(a) ***Satisfaction of Broward County Concurrency standards.*** If applicable, the Development application shall be reviewed to ensure that the proposed Development satisfies the Broward County Concurrency Standards for the Regional Road Network as outlined in Section 5-182(a) of the Broward County Land Development Code as currently enacted or as amended from time to time. The Applicant shall provide the necessary documentation from Broward County demonstrating satisfaction of these requirements. In addition to satisfying the requirements of this Section (B)(4)(a), the Applicant may also need to provide a proportionate share contribution for its impacts on the City's Roadway system, as provided in Section (B)(4)(b)(2) below.

125.12 (B)(4)(b) ***Satisfaction of City transportation Concurrency standards.*** Notwithstanding the above requirements, all Development applications shall be reviewed by the City to ensure that the impacts of the proposed Development do not degrade the level of service on the surrounding Roadway facilities below the City's adopted level of service standards. Approval of the Development application shall be granted by the City only under the following conditions:

125.12 (B)(4)(b)(1) The Development does not lie within a compact deferral area, as defined in Section 125.12 (B)(5)(c) that would be created by a Roadway segment or intersection that would deteriorate below the adopted level of service standard if the trips from the Development were approved; or

125.12 (B)(4)(b)(2) The Development lies within a compact deferral area created by a Roadway segment or intersection that would deteriorate below the adopted level of service standard if the trips from the Development were approved but one or more of the following additional conditions applies:

125.12 (B)(4)(b)(2)(i) The proposed Development does not place any trips on the over-capacity segment or intersection.

125.12 (B)(4)(b)(2)(ii) The necessary facilities are in place at the time the impacts of Development occur.

125.12 (B)(4)(b)(2)(iii) The necessary facilities are under Construction at the time the Development Permit is issued.

125.12 (B)(4)(b)(2)(iv) At the time the Development Permit is issued, the necessary facilities are the subject of a binding executed contract which provides for the commencement of the

actual Construction of the required facilities or the provision of service within one Year of the issuance of the Development Permit.

125.12 (B)(4)(b)(2)(v) At the time the Development Permit is issued, the necessary facilities have been included in the first two years of the adopted Florida Department of Transportation Five Year Work Program or Broward County Transportation Improvement Program.

125.12 (B)(4)(b)(2)(vi) At the time the Development Permit is issued, the necessary facilities have been included in the first two years of the adopted City transportation improvement program as may be created by the City, or equivalent schedule of improvements.

125.12 (B)(4)(b)(2)(vii) At the time the Development Permit is issued the necessary facilities are guaranteed in an enforceable Development Agreement. An enforceable Development Agreement may include, but is not limited to, Development Agreements pursuant to Florida Statutes § 163.3220 et seq. or an agreement or Development Order issued pursuant to Florida Statutes Chapter 380; provided, that road improvements required by a Development of Regional Impact (DRI) or Florida Quality Development (FQD) Development Order shall not be considered for Concurrency determinations for the property outside the boundaries of the DRI or FQD unless conditions (c), (d), (e), or (f) above apply.

125.12 (B)(4)(b)(2)(viii) The necessary improvement to the transportation system is one which complies with the requirements provided in Rule 9J-5.0055(3)(c) of the Florida Administrative Code.

125.12 (B)(4)(b)(2)(ix) There is an action plan approved by Broward County and the City that will accommodate the Traffic impact of the Development.

125.12 (B)(4)(b)(2)(x) There is a transportation action plan associated with City collector and/or local Roadways under the City's jurisdiction which has been approved by the City Commission which will accommodate the Traffic impact of the Development.

125.12 (B)(4)(b)(2)(xi) The Applicant has entered into an agreement to fund a fair-share proportion of the costs associated with a transportation improvement program which has been approved by the City Commission, and which will accommodate the Traffic impact of the Development. The options available for and methodology for determining the amount of proportionate share mitigation, and the procedures for the City to implement proportionate share mitigation on the City's Roadway network, utilizing the City's Concurrency management system, shall be consistent with the applicable standards of the Broward County Land Development Code.

125.12 (B)(4)(b)(2)(xii) The Applicant has entered into an agreement, either individually or with other property Owners, to provide cash to the City to ensure that the necessary transportation improvements will be in place to accommodate the impact of the Development if such improvements are of the type which can only be legally implemented when certain warranting criteria or thresholds are met.

125.12 (B)(4)(b)(2)(xiii) The Development has been demonstrated to have vested rights with regard to specific transportation facilities in accordance with the provisions of Florida Statutes Chapter 163, Part II, and the proposed Development has satisfied level of service standards for other Roadway segments and/or intersections for which a vested rights determination has not been made.

125.12 (B)(4)(b)(2)(xiv) The Development is specifically authorized as a Development of Regional Impact (DRI) or Florida Quality Development (FQD) pursuant to Florida Statutes Chapter 380, which has been issued a final local Development Order either prior to the adoption of the 1989 Broward County Comprehensive Plan, or after being reviewed for satisfaction of the Broward County Transportation Concurrency Standards and after being reviewed for satisfaction of the City transportation Concurrency standards for DRI's and FQD's submitted after September 3, 1997.

125.12 (B)(4)(b)(2)(xv) The daily and peak hour Traffic generated by the Development on a deficient Roadway segment does not exceed 0.5% of the link's capacity (service volume) at the adopted level of service, and the total peak hour trips generated by the Development assigned through any deficient intersection does not exceed more than five trips.

125.12 (B)(4)(b)(2)(xvi) The proposed Development is a public facility which the City Commission has determined to be essential to the safety, welfare, or critical functions of the City.

125.12 (B)(4)(c) ***Provision of safe and adequate access and acceptable Traffic operations.*** Notwithstanding any of the above, all site-specific Development applications which have received transportation Concurrency approval shall be reviewed by the City to ensure that safe and adequate access will be provided to the site, and that the Traffic generated by the Development will not create unsafe or adverse impacts to the Traffic operations of the surrounding Transportation Network that may not have been readily quantified by Concurrency review. Improvements necessary to meet this requirement shall be required as part of site-specific Development approval, and may include, but are not limited to, installation or modification to the following: Traffic Control Devices (including Traffic signals), signing, striping, pavement markings, lighting, channelization, Median treatment, turn lanes, and drainage. These improvements may be required in addition to requirements set forth by other governmental agencies such as Broward County or the Florida Department of Transportation, and all such improvements shall comply with applicable City standards.

125.12 (B)(5) ***Determination of project impact.*** The Traffic impact associated with the Development application shall be determined as follows:

125.12 (B)(5)(a) ***Trip generation.*** Trips generated by the project shall be estimated using the most current daily TRIPS model rates published by Broward County or other acceptable models utilized by other governmental agencies having competent jurisdiction. Peak hour directional trips shall be estimated by using the ratio of peak hour generated trips to weekday daily trips calculated from data provided by the most current version of the Institute of Transportation Engineers (ITE) *Trip Generation* manual. In the case where suitable TRIPS model rates are not available for the proposed land Use(s), rates included in

the most current version of the ITE *Trip Generation* manual, or rates based on local study, shall be utilized subject to approval of the City Traffic Engineer.

125.12 (B)(5)(b) ***Trip distribution and assignment.*** Trip distribution and assignment shall be determined by a Broward County TRIPS model run for the specified land Use and scale, less any trip credits due to the existing Uses being demolished (an Informational TRIPS Run will be required if the Development application was not subject to Broward County Concurrency review). For Roadway segments not included in the TRIPS network, and/or segments which provide immediate access to the project, Traffic assignment shall be determined by the Applicant's Traffic consultant consistent with the TRIPS Model assignment, subject to approval of the City Traffic Engineer. Project distribution and assignment performed by methods other than a TRIPS model run require prior approval from the City Traffic Engineer.

125.12 (B)(5)(c) ***Compact deferral area.*** A compact deferral area is created when a Roadway segment or intersection becomes over-capacity or operationally deficient due to the cumulative sum of existing and approved Development trips including the proposed Development trips. For the purposes of the City transportation Concurrency review, the compact deferral area created by an over-capacity Roadway segment is specifically defined as a "two-mile band having a centerline which is coincident with the centerline of the over-capacity (deficient) link extending parallel to the over-capacity link for a distance of one-half (½) mile beyond each endpoint of the over-capacity link." The compact deferral area created when an intersection becomes deficient due to unacceptable operations on one or more of its approaches is specifically defined as the "circular area encompassed by a one (1) mile radius with its center being located coincident with the center of the deficient intersection, the center of the intersection being the point of intersection of the intersecting Roadway centerlines."

125.12 (B)(5)(d) ***Insignificant impact.*** A Development shall be considered to have an insignificant impact on a deficient Roadway segment if the daily and peak hour Traffic generated by the Development on the deficient Roadway segment does not exceed 0.5% of the link's capacity (service volume) at the adopted level of service. A Development shall be considered to have an insignificant impact on a deficient intersection if the total of peak hour trips generated by the Development assigned through the deficient intersection does not exceed more than five trips.

125.12 (B)(6) ***Determination of capacities.*** Roadway capacities shall be based on the "Generalized Average Annual Daily Volume Tables" and the "Generalized Peak Hour Directional Volumes Tables" contained in the most current version of the Quality/Level of Service Handbook prepared by the Florida Department of Transportation. For those Roadway segments within the City which are included as part of the Broward County TRIPS model network, the network capacity incorporated in the model shall be used as the Average Annual Daily capacity for the segment. The corresponding peak hour directional capacity for Roadway segments included in the TRIPS model shall be the peak hour directional service volume from the FDOT Generalized tables that corresponds to the TRIPS model daily capacity. Intersection capacities and levels of service shall be based on Chapters 9 and 10 of the most current version of the *Highway Capacity Manual, Special Report 2000*, published by the Transportation Research Board of the National Academies,

Washington, D.C. If warranted, engineering studies may be performed to determine more localized capacities, subject to approval by the City Traffic Engineer.

125.12 (B)(7) ***Determination of available capacity.*** For the purposes of satisfying the standards herein, the available capacity shall be determined by:

125.12 (B)(7)(a) Adding together:

125.12 (B)(7)(a)(1) The capacity (service volume) of existing facilities operating at the adopted level of service; and

125.12 (B)(7)(a)(2) The sum total of new facilities that will become available concurrent with the impact of the Development. The capacity of the new facilities may be counted only if one or more of the following conditions applies:

125.12 (B)(7) (a)(2)(i) The necessary facilities are in place at the time the impacts of Development occur.

125.12 (B)(7) (a)(2)(ii) The necessary facilities are under Construction at the time the Development Permit is issued.

125.12 (B)(7) (a)(2)(iii) At the time the Development Permit is issued, the necessary facilities are the subject of a binding executed contract which provides for the commencement of the actual Construction of the required facilities or the provision of services within one Year of the issuance of the Development Permit.

125.12 (B)(7) (a)(2)(iv) At the time the Development Permit is issued, the necessary facilities have been included in the first two years of the adopted Florida Department of Transportation Five Year Work Program or Broward County Transportation Improvement Program.

125.12 (B)(7)(a)(2)(v) At the time the Development Permit is issued, the necessary facilities have been included in the first two years of the adopted City transportation improvement program as may be created by the City, or equivalent schedule of improvements.

125.12 (B)(7)(a)(2)(vi) At the time the Development Permit is issued, the necessary facilities are guaranteed in an enforceable Development Agreement. An enforceable Development Agreement may include, but is not limited to, Development Agreements pursuant to Florida Statutes § 163.3220 or an agreement or Development Order issued pursuant to Florida Statutes Chapter 380; provided, that road improvements required by a Development of Regional Impact (DRI) or Florida Quality Development (FQD) Development Order shall not be considered for Concurrency determinations for the property outside the boundaries of the DRI or FQD unless conditions (b), (c), (d), or (e) above apply.

125.12 (B)(7)(a)(2)(vii) The necessary improvement to the transportation system is one which complies with the requirements provided in Rule 9J-5.0055(3)(c) of the Florida Administrative Code.

125.12 (B)(7)(a)(2)(viii) The Applicant has entered into an agreement to fund a fair-share proportion of the costs associated with a transportation improvement program which has been approved by the City Commission, and which will accommodate the Traffic impact of the Development.

125.12 (B)(7)(a)(2)(ix) The Applicant has entered into an agreement, either individually or with other property Owners, to provide cash to the City to ensure that the necessary transportation improvements will be in place to accommodate the impact of the Development, if such improvements are of the type which can only be legally implemented when certain warranting criteria or thresholds are met.

125.12 (B)(7)(b) Subtracting from that number the sum of:

125.12 (B)(7)(b)(1) Existing Traffic created by existing Development. For Roadway segments included in the Broward County TRIPS Model network, the daily existing Traffic shall be the Traffic included in the model as "ADT." Peak hour Traffic shall be derived using appropriate conversion factors outlined in the most current version of the Quality/Level of Service Handbook. Existing daily and peak hour Traffic estimates may also be obtained from local study subject to approval by the City Traffic Engineer.

125.12 (B)(7)(b)(2) Future committed Traffic that will be created from other area Developments concurrent with the impact of the proposed Development. For Roadway segments included in the Broward County TRIPS Model network, the future committed daily Traffic shall be the Traffic included in the model as "Cumulative." Peak hour committed Traffic shall be derived using appropriate conversion factors outlined in the most current version of the Quality/Level of Service Handbook. Daily and peak hour committed Traffic estimates may be obtained from other technically sound methodologies subject to approval by the City Traffic Engineer.

125.12 (B)(8) ***Cost-sharing for improvements.*** As an interim measure prior to Development and adoption of the City's Capital Improvements Element, the City may require Applicants to fund the fair-share cost of transportation improvements needed to support the proposed Development, even if such improvements were not previously identified or made part of the Development requirements of another governmental agency. The fair-share percentage of improvement costs assigned to a specific Development application shall be the proportion of the Development application's peak hour trips to the sum total of the peak hour trips anticipated for the remaining Development impacting the deficient Roadway segment (or intersection) at the time the deficiency was identified. Specific transportation improvement programs shall be identified and approved by the City Commission.

125.12 (B)(9) ***Cost-estimating for improvements.*** The amount of funds to be provided or secured by a developer for the cost of transportation improvements shall be based on 125% of an Engineer's certified cost estimate using prevailing and professionally accepted unit

costs for the facilities and/or services. All cost-estimates are subject to reevaluation by the City every 24 months following the date of the executed Developer Agreement or other enforceable binding instrument, and shall be adjusted appropriately according to the *Engineering News Record Construction Cost Index* (ENRCCI), which is the accepted industry standard for cost price indexing for transportation facilities. The developer will be required to provide additional funds or security should an increase in the cost-estimate be warranted based on the ENRCCI.

§ 125.13 ACCESS TO TRAFFICWAYS.

A final Plat of lands which abut or contain an existing or proposed Trafficway shall be designed to facilitate the safe and efficient movement of vehicles between the Trafficway and the proposed Development and shall comply with the following standards and requirements:

125.13 (A) Street capacities shall be determined by the standards established by the Highway Capacity Manual prepared by the Transportation Research Board of the National Academies, Washington, D.C.

125.13 (B) The geometric design of Streets shall conform to the minimum standards established by Resolution No. 85-3606, the Minimum Construction Standards Applicable To Public Rights-Of-Way Under Broward County Jurisdiction, the Manual of Uniform Minimum Standards for Design, Construction and Maintenance for Streets and Highways, prepared by the Florida Department of Transportation, by A Policy on Design of Urban Highways and Arterial Streets prepared by the American Association of State Highway and Transportation Officials (AASHTO), and a Policy on Geometric Design of Highways and Streets (AASHTO).

125.13 (C) Trafficways shall conform to the criteria and characteristics established by and shown on the Broward County Trafficways Plan.

125.13 (D) In order to expand intersections of two major Trafficways to handle additional approach lane capacity, additional Right-Of-Way shall be required to be provided consistent with the standards of the Typical Intersection Detail on file at the Broward County Engineering Division unless waived by the Broward County Engineering and Traffic Engineering Divisions, with such waiver based upon a study submitted by the Applicant.

125.13 (E) In order to provide for the installation of Traffic Control equipment, additional Right-Of-Way shall be provided pursuant to the applicable section of the Broward County Land Development Code.

125.13 (F) A collector should intersect a Trafficway only if aligned with and extending an existing collector which intersects the Trafficway, or at a minimum distance of 1,320 feet from the intersection of an existing collector and the Trafficway, or a minimum of 1,420 feet from the intersection of two Arterial Trafficways.

125.13 (G) A Local Street should not intersect a Trafficway unless aligned with and extending an existing Local Street which intersects the Trafficway, or at a minimum distance of 660

feet from any other intersection, except at a minimum distance of 760 feet from the intersection of two Arterial Trafficways.

125.13 (H) The Frontage width of a residential Lot fronting on a Trafficway should not be less than 200 feet unless one of the following conditions is met:

125.13 (H)(1) Access to the Lot is limited to Streets other than Trafficways.

125.13 (H)(2) Access to the Lot is provided jointly with other Lots created as part of the same Development or another Development.

125.13 (H)(3) Access to the Lot will be provided from a Frontage road paralleling the Trafficway.

125.13 (I) If the Development abuts a Trafficway Corridor:

125.13 (I)(1) A Nonvehicular Access Line shall be delineated along the Trafficways Corridor except at those points of access not in conflict with the standards provided in the Broward County Land Development Code.

125.13 (I)(2) Then left-turn or right-turn lanes, or both, and bus pullout bays shall be required, pursuant to the applicable provisions of the Broward County Land Development Code.

125.13 (I)(3) Sidewalks adjacent to the Development shall be required pursuant to the applicable provisions of the Broward County Land Development Code.

125.13 (I)(4) Ingress and egress easements may be required in order to provide joint-use driveways for adjacent properties, pursuant to the applicable provisions of the Broward County Land Development Code.

125.13 (I)(5) Additional Right-Of-Way shall be conveyed to the public by dedication on the face of the Plat, by deed, or, if acceptable to Broward County, by grant of easement which is necessary for the ultimate Construction of turn lanes, bicycle facilities, Sidewalks, bus pullout bays, bus shelters, or Roadway Drainage Facilities as required pursuant to the applicable provisions of the Broward County Land Development Code.

125.13 (J) The design of a final Plat abutting a Trafficway or Trafficway Corridor reflected on the Broward County Trafficways Plan or a road functionally classified as a Broward County road shall be consistent with the applicable provisions of the Broward County Land Development Code.

§ 125.14 ADEQUACY OF STORM WATER MANAGEMENT.

125.14 (A) The proposed Development shall be designed to provide adequate areas and easements for the Construction and maintenance of a water management system to serve the proposed Development and adjacent Public Rights-Of-Way in a manner which conforms to sound

engineering standards and principles, and which will be provided in accordance with applicable provisions of the City Engineering Standards and the local agency having water management review and permitting authority over the area.

125.14 (B) In addition to (A) above, the Development Order for a Building Permit shall require the Applicant to demonstrate, prior to the issuance of the Building Permit within the Development, that the following levels of service standards, as outlined in the City Engineering Standards where applicable, will be met prior to the issuance of a Certificate of Occupancy:

125.14 (B)(1) Crown elevation for road protection.

125.14 (B)(2) Flood elevations for Buildings.

§ 125.15 ADEQUACY OF POTABLE WATER SERVICE.

125.15 (A) Potable Water service must be available prior to occupancy to provide for the needs of the proposed Development. Potable Water service includes publicly and/or privately owned water treatment facilities and wells on individual parcels which will provide for the needs of the proposed Development. The proposed Development shall be designed to provide adequate areas and easements which may be necessary to the installation and maintenance of a Potable Water distribution system. All installations shall be in accordance with applicable Building, health, and Environmental Regulations, including the applicable provisions of the Florida Administrative Code and the City Engineering Standards.

125.15 (B) A finding that Potable Water service is available must be based upon a demonstration that an existing water treatment facility has sufficient Capacity to provide for the Potable Water needs of the application and for other Developments in the service area which are occupied, available for occupancy, for which Building Permits are in effect or for which Potable Water treatment Capacity has been reserved. If Potable Water service is not available, but will be made available, any Development Order shall be conditioned on such availability. A finding that Potable Water service will be made available must be based upon a demonstration that there is a fiscally feasible plan to construct or expand a water treatment facility which will have sufficient Capacity to provide for the Potable Water needs of the Development proposed by the application prior to issuance of certificates of occupancy for that Development and for other Developments in the service area, which are occupied, available for occupancy, for which Building Permits are in effect or for which Potable Water treatment Capacity has been reserved.

125.15 (C) City Commission approval of an application for Plat approval shall not be construed to affect a reservation of Wastewater Capacity or commitment to provide service.

125.15 (D) In addition to subsections (A), (B) and (C) above, proposed Developments must comply with the adopted level of service listed in the City Engineering Standards, latest edition.

§ 125.16 ADEQUACY OF WASTEWATER TREATMENT AND DISPOSAL SERVICES.

125.16 (A) Wastewater Treatment and disposal services must be available prior to occupancy to provide for the needs of the proposed Development. The proposed Development shall be designed to provide adequate areas and easements which may be necessary for the installation and maintenance of a Wastewater disposal system. All installations shall be in accordance with all applicable health and Environmental Regulations and the City of Weston Engineering Standards, latest edition.

125.16 (B) A finding that Wastewater Treatment and disposal services are available must be based upon a demonstration that an existing Wastewater Treatment and disposal facility has sufficient plant and network Capacity to provide for the Wastewater Treatment and disposal needs of the Development proposed by the application and for other Developments in the service area which are occupied, available for occupancy, for which Building Permits are in effect or for which Wastewater Treatment or disposal Capacity has been reserved. If existing Capacity is unavailable, conditional approval may be granted if it is shown that there is a fiscally feasible plan to construct or expand a Wastewater Treatment and disposal facility which will have sufficient plant and network Capacity to provide for the treatment and disposal needs of the Development proposed by the application prior to the issuance of certificates of occupancy for that Development, and for other Developments in the service area which are occupied, available for occupancy, for which Building Permits are in effect or for which Wastewater Treatment or disposal Capacity has been reserved. This determination of adequacy shall be based upon the standards of Broward County except the City Commission may where it deems appropriate rely upon the standards of the service provider.

125.16 (C) City Commission approval of an application for Plat approval shall not be construed to effect a reservation of Wastewater Capacity or commitment to provide service.

125.16 (D) In addition to the requirements in subsections (A), (B), and (C) above, proposed Developments must comply with the adopted level of service listed in the City Engineering Standards.

§ 125.17 ADEQUACY OF SOLID WASTE DISPOSAL SITES OR FACILITIES.

125.17 (A) Solid Waste disposal sites or facilities shall be available prior to occupancy to provide for the needs of the proposed Development at the level of service in Table 1 below.

125.17 (B) A finding that Solid Waste disposal sites or facilities are available must be based upon a demonstration that existing Solid Waste disposal sites or facilities have sufficient Capacity to provide for the Solid Waste disposal needs of the Development proposed by the application and for other Developments in the service area which are occupied, available for occupancy, for which Building Permits are in effect or for which Solid Waste disposal Capacity has been reserved. If existing Capacity is unavailable, conditional approval may be granted if it is shown that there is an economically and fiscally feasible plan to expand Solid Waste disposal sites so that sufficient Capacity will be available for the Solid Waste disposal of the Development proposed by the application (and for other Developments in the service area which are occupied, available for occupancy, for which Building Permits are in effect or for which Solid Waste disposal Capacity has been reserved) prior to the issuance of any Certificate Of Occupancy.

TABLE 1: SOLID WASTE LEVEL OF SERVICE STANDARDS	
Facility Type	***Generation per Day***
Residential	8.9 lbs. per unit
Industrial & Commercial	
Factory/Warehouse	2 lbs. per 100 square feet
Office Building	1 lb. per 100 square feet
Department Store	4 lbs. per 100 square feet
Supermarket	9 lbs. per 100 square feet
Restaurant	2 lbs. per meal per day
Drug Store	5 lbs. per 100 square feet
School	
Grade School	10 lbs. per room & ¼ lb. per pupil
High School	8 lbs. per room & ¼ lb. per pupil
Institution	
Hospital	8 lbs. per bed
Nurse or Intern Home	3 lbs. per person
Home for Aged	3 lbs. per person
Rest Home	3 lbs. per person

§ 125.18 ADEQUACY OF SOLID WASTE COLLECTION SERVICE.

Solid Waste collection service will be available prior to occupancy to provide for the needs of the proposed Development.

§ 125.19 ADEQUACY OF FIRE PROTECTION SERVICE.

Fire protection services shall be adequate to provide an effective level of life safety and property protection in all new and proposed Developments, and for proposed Developments in existing developed areas. A finding that adequate fire protection service is available shall be based upon a determination of the City Manager that all proposed Development meets the following requirements:

125.19 (A) ***Water supply.*** All water supply facilities, either existing or proposed to be constructed by the developer, shall be adequate to meet the fire protection needs of the proposed Development.

125.19 (A)(1) All proposed Developments within 1,500 feet of existing public water supply shall extend the public water supply to the new Development.

125.19 (A)(2) Residential Developments of less than ten Dwelling units not within 1,500 feet of a public water supply may use approved alternative water supplies as determined by the City Manager. Approved alternative water supplies may be any one or more of the following as determined by the City Manager: fire wells, water tanker trucks, ground drop tanks, elevated water storage tanks, drafting site on either canal or water reservoirs, automatic fire sprinkler systems, or other equivalent methods as approved and permitted by the City Manager. If the proposed Development is adjacent to an existing Development, the combined total of Dwelling units shall be computed.

125.19 (A)(3) Residential Developments of ten or more contiguous Dwelling units, commercial Developments, industrial Developments, or assembly Development, which are not within 1,500 feet of a public water system shall provide an equivalent central public water supply. The equivalent central public water supply shall approximate the Fire Flows as indicated in the National Fire Protection Association (NFPA) Standard, NFPA-1"Annex H" (current edition).

125.19 (A)(4) Fire protection water mains shall be looped. Taps for looped water mains shall be no closer than 150 feet apart. Alternative methods for looping of fire mains may be permitted as approved by the City Manager. A dead end water main for fire protection may be permitted only if the dead end main is connected to a looped fire main system and does not extend more than 100 feet in length, with only one fire hydrant on that dead end main.

125.19 (B) ***Fire hydrants.*** Fire hydrants shall be installed as an integral part of the Potable Water system for the Development within the distances described below. Wherever a water line is installed within a Public or Private road Right-Of-Way, a fire hydrant shall be installed at intervals measured along the water line, access way or emergency road in accordance with spacing distances specified below. No distance shall be measured across a Trafficway Arterial, or Collector Road.

125.19 (B)(1) Residential Developments, including, but not limited to, one and two family Dwellings, or Mobile Homes shall have hydrants installed at intervals not to exceed 500 feet, with a minimum water main size of six inches. In no case shall the distance from any Structure to a permitted fire hydrant be more than half of the required interval spacing distance indicated above.

125.19 (B)(2) Commercial and industrial (non-high hazard) Developments and multi-family Developments of three or more Dwelling units shall have hydrants installed at intervals not to exceed 350 feet, with a minimum water main size of eight inches. A minimum of two hydrants shall be provided, with at least one hydrant being no more than 175 feet from any Structure within the Development. In the case of redevelopment,

existing Developments with approved water main sizes of less than 8 inches, may be permitted to remain, at the discretion of the City Manager, provided the existing design complies with the fire protection flow requirements prescribed in NFPA 1 - Annex H, or an approved alternative water supply.

125.19 (B)(3) Structures protected with automatic fire suppression systems or standpipes shall have a fire hydrant installed at an approved location determined by the City Manager. The installed fire hydrant shall be no closer than 10 feet and no further than 20 feet from a fire department connection.

125.19 (B)(4) High hazard commercial and industrial Developments, such as storage facilities, manufacturing operations, shopping centers, and similar operations, as defined in the Florida Fire Prevention Code, which have large amounts of combustible or flammable products shall be required to install fire hydrants and water main sizes as determined by computing the required Fire Flow for the proposed Development.

125.19 (B)(5) All fire hydrants shall deliver the required gallonage with a residual pressure of 20 pounds per square inch.

125.19 (C) Fire Department Connections:

125.19 (C)(1) When a single, stand-alone, fire department connection is utilized, the fire department connection shall be located at an approved location outside of the collapse zone of the Structure, as determined by the City Manager.

125.19 (C)(2) When wall mounted fire department connections are utilized for a Structure, there shall be a minimum of two (2) fire department connections installed on the exterior of the Building. These fire department connections shall be installed remotely from each other, at approved locations as determined by the City Manager.

125.19 (D) ***Fire apparatus and facilities.***

125.19 (D)(1) The fire agency responsible for fire protection service will determine the strategic locations of fire stations and availability and suitability of fire apparatus and equipment within defined response areas for the proposed Development. In no case shall any point in a Development be more than three miles travel distance from an existing or budgeted fire station which houses the required fire department vehicles to serve the response area. Such fire apparatus and facilities shall be under the administrative and operational control of the fire agency responsible for fire protection service.

125.19 (D)(2) Determination of the number and type of Fire Rescue Department vehicles and apparatus required to provide adequate fire rescue services and protection for the proposed Development and given response area shall be as outlined in the ISO Fire Suppression Rating Schedule (current edition), and as specified by the City Manager.

125.19 (E) Public Safety Communications Network and System Integrity Requirements: Buildings and Structures shall not interfere with the Public Safety Communications network and system. A minimum radio signal strength required for the Public Safety Communications network

and system, at a level determined by the City Manager, shall be provided and maintained within any Building or Structure, to ensure the integrity of the Public Safety Communications network and system. Buildings, Structures, and/or Developments, shall be modified, as determined by the City Manager, to accommodate the needs of the Public Safety Communications network and system, to eliminate any potential interference or disruption to the network and system that a Building, Structure, and/or a Development would create, or otherwise accommodate the needs of the public safety communication network and system within the Development proposal.

§ 125.20 ADEQUACY OF MUNICIPAL FACILITIES.

125.20 (A) An application for land use plan amendment or Plat submitted to the City for Development pursuant to the applicable land Development regulation shall provide for such Usable Land area as required by the comprehensive land use plan to be set aside for parks, playgrounds, Recreational Facilities, or other municipal purposes within the subdivision. The locations of these areas shall be subject to the approval of the City Commission.

125.20 (B) In order to provide Usable Lands or funds or a combination thereof to be used by the City to provide administrative, operational, Recreational, and public safety Facilities, or other municipal purposes, a developer must at the discretion of the City either dedicate land or provide a cash equivalent.

§ 125.21 ADEQUACY OF PUBLIC SCHOOL FACILITIES.

Pursuant to the Public School Facilities Element of the City Comprehensive Plan (PSFE) and the Amended Interlocal Agreement for Public School Facility Planning (ILA), the City, in collaboration with Broward County and the School Board of Broward County (School Board), shall ensure that Public School facilities will be available for current and future students consistent with available financial resources and adopted level of service standards and that such facilities are available concurrent with the impact of proposed residential Development.

125.21 (A) ***Applications subject to a Public School Concurrency determination.*** The City shall not approve an application for a residential Plat, replat, Plat note amendment, or any site plan, until the School Board has reported that the school Concurrency requirement has been satisfied or unless the City has determined that the application is exempt or vested.

125.21 (B) ***Exemptions and vested Development.***

125.21 (B)(1) The following residential applications shall be exempt from the requirements of Public School Concurrency:

125.21 (B)(1)(a) An application which generates less than one student at each level in the relevant Concurrency Service Area (CSA). Such Development shall nevertheless be subject to the payment of school impact fees;

125.21 (B)(1)(b) An application for age restricted communities with no permanent residents under the age of 18. Exemption for an aged restricted community shall only be applicable provided that a recorded restrictive covenant prohibiting the residence of school

aged children in a manner not inconsistent with federal, State or local Law or regulations is provided;

125.21 (B)(1)(c) A Development of Regional Impact (DRI) with a Development Order issued before July 1, 2005, the effective date of Senate Bill 360, or an application submitted before May 1, 2005; or

125.21 (B)(1)(d) As may otherwise be exempted by Florida Statutes.

125.21 (B)(2) The following residential applications shall be vested from the requirements of Public School Concurrency:

125.21 (B)(2)(a) Any application located within a previously approved comprehensive plan amendment or rezoning which is subject to a mitigation agreement in accordance with the following:

125.21 (B)(2)(a)(1) The mitigation to address the impact of the new students anticipated from the Development has been accepted by the School Board consistent with School Board Policy 1161, entitled "Growth Management," as may be amended from time to time; and

125.21 (B)(2)(a)(2) A declaration of restrictive covenant has been properly executed and recorded by the developer, or the Development is located within a boundary area that is subject to an executed and recorded tri-party agreement (between the School Board, City, and the developer) consistent with School Board Policy 1161, as may be amended from time to time.

125.21 (B)(2)(a)(3) The Applicant shall provide a letter from the School Board or other evidence acceptable to the City verifying subsections (1) and (2) above. Other evidence may include documentation as specified in the tri-party agreement.

125.21 (B)(2)(b) Any application which is included within a residential Plat or Development Agreement for which school impacts have been satisfied for the Dwelling units included in the proposed application. This includes any unexpired applications approved by Broward County or City between February 2, 1979, and the effective date of the PSFE of the City's Comprehensive Plan. In the transmittal of an application to the School Board, the City shall include written information indicating that the units in the application are vested.

125.21 (B)(2)(c) Any application that has received final site plan approval, and which has not expired, prior to the effective date of the PSFE of the City's Comprehensive Plan.

125.21 (B)(3) To be exempt or vested from the requirements of Public School Concurrency, an Applicant seeking such a determination shall be required to submit documentation with the application to the City which shall include written evidence sufficient to verify that the subject Development meets the exemptions stated herein, and as such, is exempt from the requirements of Public School Concurrency. The City shall

transmit or provide written information to the School Board indicating that the units in the application are vested.

125.21 (C) ***Level of service standards.*** The level of service standard (LOS) shall be 110% of the permanent Florida Inventory of School Housing (FISH) capacity for each Concurrency Service Area. The LOS shall be achieved and maintained within the period covered by the five-year schedule of capital improvements contained in the effective Five-Year Adopted District Educational Facilities Plan (DEFP).

125.21 (D) ***Concurrency Service Areas (CSAs).*** The areas for the implementation of Public School Concurrency in the City shall be known as Concurrency Service Areas (CSAs) and such CSAs shall be the approved school boundaries for elementary, middle and high schools, as annually adopted by the School Board. For the purposes of Public School Concurrency, such CSAs shall be effective on the first day of the school year and end on the last day before the beginning of the next school year.

125.21 (E) ***Student generation rates.*** The Broward County adopted student generation rate(s) contained in the Broward County Land Development Code shall be utilized to determine the potential student impact anticipated from the residential Development proposed in submitted applications.

125.21 (F) ***Review procedure.***

125.21 (F)(1) ***Public School Impact Application (PSIA).*** Any Applicant submitting an application with a residential component, that is not exempt or vested, is subject to Public School Concurrency and shall be required to submit a Public School Impact Application (PSIA) for review by the school district. Evidence of acceptance of the PSIA and payment of the applicable application fee to the school district shall be required prior to acceptance of the application by the City.

125.21 (F)(2) ***School Capacity Availability Determination Letter (SCAD).***

125.21 (F)(2)(a) No residential application or amendments thereto shall be approved by the City, unless the residential Development is exempt or vested from the requirements of Public School Concurrency, or until a School Capacity Availability Determination (SCAD) Letter has been received from the school district confirming that capacity is available, or if capacity is not available, that proportionate share mitigation has been accepted by the School Board. The SCAD Letter shall be sent to the Applicant, the Broward County Development Management Division if the application relates to a Plat, and the City, no later than 45 days after acceptance of the completed PSIA by the school district.

125.21 (F)(2)(b) The school district shall determine the potential student impact from proposed residential Development on the applicable CSA by performing the review procedure specified in School Board Policy 1161, as amended.

125.21 (F)(2)(c) If the school district determines that sufficient permanent capacity is available at the adopted LOS to accommodate students anticipated from the Development,

the school district shall issue a SCAD Letter indicating that adequate school facilities exist to accommodate the student impact and that the proposed Development satisfies Public School Concurrency requirements.

125.21 (F)(2)(d) If the SCAD Letter states that the Development has not satisfied Public School Concurrency requirements, the SCAD Letter shall state the basis for such determination, and the Applicant shall have 30 days to propose proportionate share mitigation to the school district.

125.21 (F)(2)(e) If the Applicant proposes proportionate share mitigation within the 30 day deadline, upon the subsequent acceptance of the proposed mitigation by the School Board, and upon the execution of a legally binding document among the School Board, the City and the Applicant, an amended SCAD Letter shall state that adequate capacity anticipated from the accepted proportionate share mitigation will be available to accommodate the student impact anticipated from the proposed Development and that the proposed Development satisfies Public School Concurrency requirements. The total amount committed for any mitigation option shall not be less than the school impact fees due for the proposed units as calculated based upon the adopted school impact fee schedule provided in the Broward County Code of Ordinances. The school impact fee for the Development shall be considered included in the total proportionate share mitigation amount due or paid. If the proportionate share mitigation is not accepted by the School Board, the amended SCAD Letter shall state the basis upon which the mitigation proposal(s) was rejected and why the Development is not in compliance with Public School Concurrency requirements.

125.21 (F)(2)(f) An Applicant adversely impacted by a SCAD determination may appeal such determination by written request to the School Board within the designated 30 day time period. A timely request for an appeal shall stay the requirement for an Applicant to propose proportionate share mitigation until the appeal has been resolved.

125.21 (F)(2)(g) If an application or approval expires, the SCAD Letter will no longer be valid.

125.21 (G) ***Term of Public School Concurrency.***

125.21 (G)(1) The Public School Concurrency approval for a residential site plan shall be considered vested, unless the site plan approval expires as provided for within the City Code.

125.21 (G)(2) The Public School Concurrency approval for a Plat, replat, Plat note amendment or findings of adequacy shall be considered vested for up to five Years from the date of Broward County's approval. Vesting of a residential application beyond the five Years requires that one of the following conditions are met within the five Year period: 1) the issuance of a Building Permit for a Principal Building and first inspection approval or 2) substantial completion of project water lines, Sewer lines and the rock base for internal roads. If the Development was denied, the school district shall deduct students associated with the Development from its database.

§ 125.22 IMPACT ON ENVIRONMENTALLY SENSITIVE LANDS AND ARCHAEOLOGICAL RESOURCES.

125.22 (A) If a proposed Development includes all or any part of any lands identified as jurisdictional Wetlands as defined in Sections 62-340.100 through 62-340.550 of the Florida Administrative Code, the City shall require Development authorizations from all applicable external agencies regarding impacts of wetland habitat.

125.22 (B) If the proposed Development Permit includes any Archaeological Site listed in the Florida Site File then an appropriate survey shall be required.

125.22 (B)(1) ***Archaeological resources.***

125.22 (B)(1)(a) If a professional archaeological survey has not been conducted within those portions of the property subject to the Development Permit, a Reconnaissance Level Archaeological Survey shall be conducted and an archaeological summary report prepared by a professional archaeologist. The archaeologist shall be familiar with the kind and character of Archaeological Sites known or expected to be present in Broward County and shall meet the Professional Qualifications Standards established by federal regulation (See 36 CFR 61). The archaeological report submitted by the Applicant shall include a brief history of the area, the field survey methods, the results of the field survey and an assessment of any identified Archaeological Sites.

125.22 (B)(1)(b) If the subject property contains a designated Archaeological Site, or an Archaeological Site identified pursuant to (a) above:

125.22 (B)(1)(b)(1) Permit approval shall include requirements for management of the Archaeological Site. It shall be the purpose of the management plan to provide for protection and preservation of the site to the extent feasible and to allow salvage Excavation only where other methods of preservation would not permit reasonable Development of the subject property. The proposed plan for management shall be reviewed by the City Manager after consultation with any other agencies deemed appropriate;

125.22 (B)(1)(b)(2) A note shall be placed on the face of the Plat or site plan identifying the site using the Florida Site File number and historical name, if any;

125.22 (B)(1)(b)(3) A note shall be placed on the face of the Plat or site plan referencing the management agreement;

125.22 (B)(1)(b)(4) The boundaries of the Archaeological Site shall be delineated on the face of the Plat or site plan; and

125.22 (B)(1)(b)(5) If preservation of the entire Archaeological Site is not feasible, only that portion of the site which cannot be preserved may be subject to an Archaeological Salvage Excavation operation as authorized through the State of Florida Division of Historical Resources and outlined in the Management Plan.

125.22 (B)(1)(b)(6) If, through the Site Assessment Survey, the archaeologist determines that the site would not be likely to yield important prehistorical or historical information, and this determination is accepted by the City Manager after consultation with any other agencies deemed appropriate, then, based on the findings of the Site Assessment Survey, the City Manager may waive compliance with paragraphs 2, 3, 4, and 5 above, in whole or in part. However, the City Manager may require that a monitoring program be established for all State authorized Excavation activities within or in the immediate vicinity of the Archaeological Site.

125.22 (B)(1)(b)(7) If otherwise in compliance with the applicable standards and minimum requirements of this Code, the application for a Development Permit may be approved subject to the management agreement containing those conditions set forth in the management plan and which have been determined by the City Commission to be reasonably necessary to minimize disturbance of the Archaeological Site. The execution and recordation of the management agreement shall be a condition of the Development Order. Such an agreement shall also provide for recordation of releases upon satisfaction of the conditions, where applicable.

125.22 (B)(2) ***Procedural requirements.*** For purposes of this section, the Applicant shall not have met the procedural requirements for the submittal of a complete application for a Development Permit, as determined by the City Manager, until the Applicant has submitted an archaeological report which contains all relevant information required by this section, as determined by the City Manager, to evaluate the archaeological significance of the site.

125.22 (C) If a proposed Development includes all or any part of any lands designated by Broward County as a Natural Resource Area (NRA), Local Area of Particular Concern (LAPC), Upland Tree Resources (UTR), Environmentally Sensitive Lands (ESL) or Environmentally Sensitive Land that is also a Local Area of Particular Concern (ESL/LAPC), the City shall require Development authorizations from the Broward County Environmental Protection Department regarding potential impacts to these habitats.

§ 125.23 CONFORMITY TO THE CITY CERTIFIED LAND USE PLAN.

The Development of land within the City shall conform to the Certified Land Use Plan.

PART 3: PLATS

§ 125.30 LAND REQUIRED TO BE PLATTED.

125.30 (A) No application for a Building Permit for the Construction of a principal Building on a Parcel Of Land shall be granted unless a Plat including such Parcel Of Land has been approved by the City Commission and the Broward County Commission and recorded in the Official Records of Broward County subsequent to June 4, 1953, which commences with Plat Book 32, page 15, Official Records of Broward County, Florida.

125.30 (B) The Construction of a Single-Family Dwelling Unit or Duplex on a Lot or parcel which Lot or parcel was of record as such in the Official Records of Broward County as of March 1, 1989 shall not be required to be platted, provided that the Applicant has met all City requirements for obtaining Plat approval prior to the issuance of the Building Permit.

§ 125.31 BUILDING PERMITS PRIOR TO PLAT RECORDATION.

125.31 (A) ***City Commission and Broward County Commission approval required.*** The City Commission may allow Building Permits to be issued for a Parcel Of Land for which Plat approval has been given by the City Commission and the Broward County Commission although the Plat has not yet been recorded, provided such authorization is granted in an agreement among the developer, the City, and Broward County. Such agreements shall be in a form acceptable to the City Attorney and shall at a minimum require compliance with the applicable provisions of Plat approval and prohibit the issuance of a Certificate Of Occupancy until the Plat is recorded. The City Commission shall be required to make a finding prior to the issuance of the Building Permit that facilities and services will be available at the adopted level of service concurrent with the impact of Development.

125.31 (B) ***Essential governmental facilities.*** The City Commission may allow Building Permits to be issued for an essential governmental facility after final Plat application where the City Commission finds that immediate Construction of the governmental facility is essential to the health, safety, or welfare of the public and where the Commission determines that public facilities and service will be available at the adopted level of service concurrent with the impact of the Development of the governmental facility. Such authorization shall be granted by agreement between the City and Broward County and shall be in a form acceptable to the City Attorney. A Certificate of Occupancy shall not be issued until the Plat is recorded.

§ 125.32 MANDATORY PLAT REVIEW.

125.32 (A) ***Application.*** An application for Plat review shall be filed and processed pursuant to § 125.05 (A) through (C).

125.32 (B) ***Plat Drawing Requirements.*** An application for Plat review shall be accompanied by a Plat for Development, the overall size of which shall be 24 " x 36 ", drawn at a scale no smaller than 1 " = 100 feet except when a smaller scale is approved by the City Manager and the Broward County Engineering Division, Plat Section, and which shows the following:

125.32 (B)(1) The proposed subdivision name or identifying title. Such name shall not be the same or in any way so similar to any name appearing on any recorded Plat in Broward County as would confuse the records or mislead the public as to the identity of the subdivision, except when an existing subdivision is subdivided as an additional unit or section by the same developer or his successors in title.

125.32 (B)(2) A Plat location sketch showing the Plat in relation to a nearby intersection of two Arterial, collector, or other well-established existing Roadways.

125.32 (B)(3) North arrow, scale and date.

125.32 (B)(4) Name of the Owner of the property or the Owner's authorized agent.

125.32 (B)(5) Lots and blocks of adjacent recorded Plats, giving Plat book and page number along with names of such Plats.

125.32 (B)(6) All existing Streets and alleys on or adjacent to the tract, including name and Right-Of-Way width.

125.32 (B)(7) The legal description of the property being platted.

125.32 (B)(8) All existing easements and Rights-Of-Way within the Plat limits with the purpose and the instrument of record labeled.

125.32 (B)(9) Location and width of all proposed Ultimate Rights-Of-Way, alleys, easements; proposed Lot lines with dimensions, public areas, and parcels of land proposed or reserved for public Use.

125.32 (B)(10) If the Development abuts a Trafficway, proposed points of access to the Trafficway.

125.32 (B)(11) Access to a Public Right-Of-Way that will be utilized by the proposed Development.

125.32 (B)(12) Space for signature of the Broward County Mayor.

125.32 (B)(13) Space for signature of the Broward County Administrator.

125.32 (B)(14) Space for Highway Construction and Engineering Division Director's signature and seal.

125.32 (B)(15) Space for signature of the City Mayor and City Manager.

125.32 (B)(16) Space for the Broward County Surveyor's signature and seal, if applicable.

125.32 (B)(17) Space for approval of Broward County Planning Council.

125.32 (B)(18) Space for approval of Broward County Environmental Protection Department.

125.32 (B)(19) The parcel encompassed by the legal description shown on the Plat shall be clearly identified with a heavy line, and shall show dimensions, and either bearings or interior angles of said parcel with independent ties to two or more land corners, or independent ties to a recorded subdivision, and one land corner. When a case arises where it is impractical to tie to a land corner because of lost or destroyed monuments, and the parcel can be adequately surveyed independent of said land corners, then the following points will be considered acceptable as land ties: block corners, permanent reference

monuments, or permanent control points from a previously recorded Plat. The Use of these types of land ties shall be subject to approval by the Broward County Surveyor.

125.32 (B)(20) Space for Plat book and page number outside the border in the upper right hand corner of each page.

125.32 (B)(21) Space for Plat file number, as assigned by the Broward County Development Management Division, outside the border in the lower right hand corner of each page.

125.32 (B)(22) Notes or legend, and any tabular data or other data pertinent to the Plat, on each page that contains the drawing.

125.32 (B)(23) Executed dedication and acknowledgment language.

125.32 (B)(24) Executed mortgagee approval and acknowledgment language.

125.32 (B)(25) Adjacent Streets.

125.32 (B)(26) All Plat dimensions shall be shown accurate to one-hundredths of a foot, except for riparian boundaries, which may be shown as approximate with a witness line showing complete dimension data. Rows of Lots with the same dimensions may use ditto marks providing the first and last Lots in the row are appropriately dimensioned.

125.32 (B)(27) Computation of the square footage of each Parcel Of Land and the acreage of the land proposed to be platted accurate to the nearest square foot. All survey and survey information shall be certified by a land surveyor licensed in the State of Florida.

125.32 (B)(28) At least two benchmarks referenced to the National Geodetic Vertical Datum of 1929 or the Broward County Vertical Network in conformity with the standards adopted by the National Ocean Survey for Third Order Vertical Control. No benchmark shall be established purporting to be based on the National Geodetic Vertical Datum or the Broward County Vertical Network unless the benchmark is certified by a surveyor licensed in the State of Florida and such certification is shown on the Plat. The benchmarks shall be of a permanent nature, easily accessible, located within, along or within 200 feet of the Plat boundary and described by ties to the Plat boundary. The Plat shall list in the Plat notes the governmental benchmark from which the Plat benchmarks were established. Only benchmarks established by federal, State, county, or municipal governments shall be acceptable as the starting benchmark.

125.32 (B)(29) The Plat shall show grid bearings or azimuths, with state plane coordinates shown on all permanent reference monuments and all land ties where the Plat lies within sections assigned state plane coordinates that have been recorded in the public records of Broward County. Coordinates may be tabulated when necessary for legibility, and must appear on each page that contains the drawing. State plane coordinates shall be derived from field measurements in conformity with the Minimum Technical Standard for Land

Surveying pursuant to Chapter 21, Section 21HH-6, Florida Administrative Code, adopted by the Florida Board of Land Surveyors, September 1, 1981.

125.32 (B)(30) A mathematical closure of the Plat boundary shall not exceed three hundredths (.03) of a foot.

125.32 (B)(31) Copies of approved certified corner records shall be submitted to the Broward County Land Surveyor prior to Plat recordation, unless approved certified corner records are on file with the State of Florida Department of Natural Resources pursuant to Florida Statutes, Chapter 177, Part III.

125.32 (B)(32) The Surveyor's Certificate shall state conformity with:

125.32 (B)(32)(a) Florida Statutes, Chapter 177.

125.32 (B)(32)(b) National Geodetic Vertical Datum (NGVD) and National Ocean Survey Third Order Control Standards.

125.32 (B)(32)(c) Applicable sections of Chapter 21 HH-6, Florida Administrative Code.

125.32 (B)(33) Space for approval of drainage district, special improvement district, or taxing district, as applicable.

125.32 (B)(34) Such other information as required by the City.

125.32 (C) ***Procedural requirements.***

125.32 (C)(1)(a) The agencies shall prepare comments and forward such staff report to the City Manager. A final development review report shall be issued at a regularly scheduled development review meeting.

125.32 (C)(1)(b) Upon approval of the final Plat by the reviewing agencies and receipt of the Broward County Development Review Report, the final Plat will be scheduled for the next available City Commission meeting.

125.32 (C)(2) Prior to recording the Plat an Applicant shall furnish the City with a digital file in a format compatible with the City's GIS/CAD system according to the following guidelines:

125.32 (C)(2)(a) If the Plat is prepared utilizing a CAD/GIS or other automated system capable of exporting a "DXF" file, then the file submitted must contain all the line and text data utilized in the preparation of the final Plat document, as submitted and as amended; or

125.32 (C)(2)(b) If the Plat is prepared by hand drafting but utilizes a coordinate geometry (COGO) computer program in the calculation of the parcel or parcels, then the file submitted must contain the coordinate values, point numbers, distance and direction of

all lines, arcs, and radius points utilized in finalizing the Plat document for recordation, as submitted and as amended; or,

125.32 (C)(2)(c) If the Plat is prepared without the use of any of the above, then an affidavit to that effect must be submitted and signed by the surveyor of record whose name appears on the face of the Plat.

125.32 (C)(3) Any Plat being submitted in the City in which state plane coordinates are being used to identify permanent reference monuments (PRM) shall use the most current datum and adjustment (as of the date of this ordinance the NAD 83 with the 1990 adjustment).

125.32 (D) ***Depiction of non-contiguous parcels of land.*** A Plat may not depict or include non-contiguous parcels of land except in the following cases:

125.32 (D)(1) Parcels may be separated by a Right-Of-Way for a Highway, road, railroad, or Utility.

125.32 (D)(2) Parcels may be separated by a waterbody or watercourse which does not exceed 300 feet.

125.32 (E) ***Single Family subdivisions.*** No application for a Building Permit for the Construction of a Single-Family unit shall be granted unless a Plat including Lots has been approved by the City Commission. This provision shall not apply to those Single-Family units specified in § 125.30.

§ 125.33 NOTATION ON FACE OF PLAT.

The face of each recorded Plat shall bear a notation indicating the developmental level at which the Plat was reviewed and approved for adequacy of required services and facilities pursuant to this chapter.

125.33 (A) An application for a change to the notation on the face of a Plat or for placement of a notation on the face of a Plat recorded between June 4, 1953, and March 20, 1979, may be granted if the City Commission makes a determination that the amendment is consistent with the terms of this Chapter.

125.33 (B) The Applicant for a change to the notation on the face of a Plat or for placement of a notation on the face of a Plat recorded between June 4, 1953, and March 20, 1979, shall be required to execute or provide such documents as determined necessary to amend the notation.

§ 125.34 INSTALLATION OF IMPROVEMENTS.

125.34 (A) ***Completion of required improvements***. All improvements required from the developer as a condition to the approval of an application for a Development Order, including but not limited to water, Sewer, paving, drainage, Street signs, fire hydrants, and connected Street

lighting, shall be installed and completed prior to the issuance of the first Building Permit for a principal Structure.

125.34 (B) ***Water, Sewer and drainage improvements***. Any water, Sewer or drainage improvements proposed or required to be constructed within the proposed road Right-Of-Way shall be installed and completed before acceptance of any proposed or required road improvements by the appropriate agency.

125.34 (C) ***Paved access.*** Prior to the issuance of the first Building Permit, the developer shall provide paved fire access to all existing and proposed vertical Construction within the site. Said paved access shall be approved by the City Engineer.

§ 125.35 WAIVER OF REQUIRED DEDICATIONS AND IMPROVEMENTS FOR AFFORDABLE HOUSING.

125.35 (A) When an application for a Development Permit is made for the Construction of Affordable Housing, as defined in § 1.01, the City Commission may waive, upon a request therefore, dedications of land, payments of money in lieu thereof, if the City Commission finds that the proposed project will provide Affordable Housing for Very Low Income, Low Income, and/or Moderate Income Persons as defined in § 1.01. Prior to consideration of any waiver request, the developer shall obtain certification from Broward County stating that the project qualifies as Affordable Housing at a specified income level.

125.35 (B) The percentage of any waiver granted shall be as follows:

Very Low Income - 100%

Low Income - 75%

Moderate Income - 50%

125.35 (C) Any such waiver shall be only for that portion of the Development that qualifies as Affordable Housing.

125.35 (D) Upon such waiver, the City Commission shall identify on the record the source of funds that will be used to pay for the services or facilities that would otherwise have been paid for by such dedications, payments, or fees.

125.35 (E) Developers shall enter into an agreement with the City upon terms and conditions determined by the City to be necessary to reasonably ensure that Affordable Housing is constructed, that any waiver hereunder enhances the affordability of the housing, and that such units are rented or sold to Persons meeting the income limitations defined in § 1.01. The requirement for the agreement may be waived by the City Attorney if, in the opinion of the City Attorney, adequate alternate assurances exist.

PART 4: SITE PLANS

PROCEDURES

§ 125.40 SITE PLAN REVIEW.

125.40 (A) ***Generally.*** Review of a site plan is required prior to any Development of land in the City.

125.40 (B) ***Approval authority.***

125.40 (B)(1) ***Administrative review site plans***. Site plans for the deposit and contouring of fill on land and the Construction of a Single-Family residential or Duplex Dwelling Unit(s) shall be subject to approval by the City Manager.

125.40 (B)(2) ***City Commission review site plans.*** All other site plans shall be subject to approval by the City Commission.

§ 125.41 SITE PLAN APPLICATION AND REVIEW.

125.41 (A) ***Procedures.*** An application for site plan approval shall be filed and processed pursuant to §§ 125.05(A) through (C).

125.41 (B) ***Submission requirements.***

125.41 (B)(1) ***Site plan.*** A site plan shall be not less than 24" x 36", drawn at a scale not less than 1" = 50'. The Site Plan shall include the following:

125.41 (B)(1)(a) A legal description, including the section, township, and range.

125.41 (B)(1)(b) Clearly identified property and site boundaries ties-to-section corners and adjacent properties (showing land Use and zoning designations for each property).

125.41 (B)(1)(c) Proposed land Use(s).

125.41 (B)(1)(d) Location and Height of all Structures and Gross Floor Area with dimensions to Lot lines, and designations of Use.

125.41 (B)(1)(e) Building separations.

125.41 (B)(1)(f) Circulation system for Motor Vehicles, bicycles, and pedestrians, showing loading area(s), all parking, and connection to Right(s)-Of-Way.

125.41 (B)(1)(g) All adjacent Rights-Of-Way, with indication of ultimate Right-Of-Way line, center line, width, paving width, existing Median cuts and intersections, Street

light Poles, Traffic signals and other Utility facilities and easements. Location of all cross Streets and driveways within 350' of property limits.

125.41 (B)(1)(h) Provider of water and Wastewater services.

125.41 (B)(1)(i) Location of septic tank and drain field, if applicable.

125.41 (B)(1)(j) Provider of storm water services.

125.41 (B)(1)(k) Existing and proposed fire hydrant locations.

125.41 (B)(1)(l) The following computations:

125.41 (B)(1)(l)(1) Gross acreage.

125.41 (B)(1)(l)(2) Net acreage. Gross acreage covered by the property excluding road easements and Rights-Of-Way, if any.

125.41 (B)(1)(l)(3) Number of Dwelling units and density for residential Uses.

125.41 (B)(1)(l)(4) Square footage of ground covered by Buildings or Structures and designation of Use.

125.41 (B)(1)(l)(5) Required number of parking spaces.

125.41 (B)(1)(l)(6) Number of parking spaces provided.

125.41 (B)(1)(l)(7) Pervious and impervious surfaces, in square footage and percentage.

125.41 (B)(1)(m) Site plan location sketch, including section, township, and range, showing the nearest public rights of way.

125.41 (B)(1)(n) Geometry of all paved areas including centerlines, elevations and dimensions for lengths, widths and radii.

125.41 (B)(1)(o) Solid Waste and Recycling storage location(s) and paved access for collection vehicles.

125.41 (B)(1)(p) On-Site loading areas and paved access for vehicles of the required type, if applicable.

125.41 (B)(1)(q) Areas for fire-rescue vehicles, and access for vehicles of the required type, if applicable.

125.41 (B)(1)(r) Proposed street names and addresses, or a range of addresses, for any proposed Building within the site plan, in conformity with City standards.

Address assignment shall be based on a Right-Of-Way Frontage the site faces or accesses. Driveways serving as access to a location that connect to Frontage cannot be used for addressing purposes.

125.41 (B)(1)(s) Other such information as required by the City.

125.41 (B)(2) ***Additional submission requirements.*** In addition to the site plan, the following items shall be included:

125.41 (B)(2)(a) *Survey*. A survey prepared by a Florida Professional Surveyor and Mapper, certified as to meeting the requirements of the applicable section of the Florida Administrative Code, reflecting existing natural features, such as topography, vegetation, existing paving, existing Structures, and water bodies.

125.41 (B)(2)(b) *Landscape plan and irrigation plan*. Landscape plan and irrigation plan with landscape calculations, existing Tree Survey with indication of existing Native Vegetation that will be preserved, as required herein.

125.41 (B)(2)(c) *Lighting plan*. Lighting plan showing photometric measurements and spillage onto adjacent properties and Rights-Of-Way, if applicable.

125.41 (B)(2)(d) *Sign Plan*. Sign plan, for all Signs that will be on site.

125.41 (B)(2)(e) *Elevations*.

125.41 (B)(2)(e)(1) For administrative review site plans, a minimum 24 inch by 36 inch rendition of the Building elevations of all sides shall be submitted with the site plan.

125.41 (B)(2)(e)(2) For City Commission review site plans, a minimum 24 inch by 36 inch color rendition of the Building elevations of all sides shall be submitted with the site plan. The rendition shall be placed upon an easel in the lobby of the place of the City Commission meeting at least 30 minutes prior to the commencement of the City Commission meeting where the site plan will be considered. In addition, 11 inch by 17 inch color renderings depicting the architectural design elements and theme for all sides of a Building Structure shall be submitted with the site plan. All sides of a Building Structure are required to possess similar architectural design elements and theme that is depicted on the primary side of the same Building Structure.

125.41 (B)(2)(f) Pavement markings and Traffic signing plan.

125.41 (B)(2)(g) Schematic water and Sewer plan including the location and size of all mains and lift stations (Final engineering plans must be submitted and approved).

125.41 (B)(2)(h) Paving and drainage plan showing location of all drainage features, and Retention Areas, if any.

125.41 (B)(2)(i) Materials chart requirement for City Commission review site plans:

125.41 (B)(2)(i)(1) All Applicants for site plan approval, where applicable, shall create and present to the City, a materials chart, which shall consist of actual samples, indicating the color, type and the manufacturer's name and identifying numbers of roofing materials, and the color, type and the manufacturer's name and identifying numbers of paint, to be used in the project.

125.41 (B)(2)(i)(2) The City shall maintain the materials chart until the issuance of the Certificate of Completion or the Certificate Of Occupancy, and for such additional time as it may determine is necessary.

125.41 (B)(2)(i)(3) The Applicant shall also provide the City with the information from the materials chart in written form, including the name of the manufacturer and the manufacture's designation number for each item used on the materials chart. This sheet shall be attached to the site plan approval application and shall be incorporated as part of the application.

125.41 (B)(2)(j) Applications submitted that utilize an existing approved site plan, or portion thereof, shall either include: a current "as built" or existing conditions survey delineating all Buildings, parking spaces and easements of record; or the certification of a surveyor, Engineer or architect, duly licensed by the State, that the existing conditions are identical with those shown on the submitted site plan.

125.41 (B)(2)(k) Other such information as required by the City.

125.41 (C) ***Review process for City Commission review site plans.***

125.41 (C)(1) The reviewing disciplines shall review the site plan and prepare comments for inclusion in a development review report to be issued at a regularly scheduled development review meeting.

125.41 (C)(2) The Applicant shall discuss the development review report with the representatives of the reviewing disciplines and shall address all comments raised by the reviewing disciplines.

125.41 (C)(3) Upon completion of the review of the site plan by the reviewing disciplines, the site plan shall be scheduled for the next available City Commission meeting.

125.41 (D) ***Site plan amendments***. Any change to an approved site plan shall be considered an amendment. The Applicant shall file an application for a site plan amendment with the City. However, no application will be considered for property that is the subject of pending Code enforcement action by the City or that has an unpaid Code enforcement lien unless the amendment to the site plan is necessary to cure the violation.

125.41 (D)(1) Administrative review site plan amendments.

125.41 (D)(1)(a) Any site plan amendment that meets all of the following criteria shall be considered an administrative review minor site plan amendment:

125.41 (D)(1)(a)(1) The amendment does not require modifications or deletion of any conditions of the original site plan approval or any approved amendments thereto.

125.41 (D)(1)(a)(2) The amendment does not rely on any shared parking analysis or cross parking agreement that has been performed or entered into more than five Years from the date of the site plan amendment application.

125.41 (D)(1)(a)(3) The amendment does not exceed 5% of the originally approved height.

125.41 (D)(1)(a)(4) The amendment does not result in any increase in the Gross Square Footage of the Building.

125.41 (D)(1)(a)(5) The amendment does not require a variance or special exception approval.

125.41 (D)(1)(a)(6) The amendment does not result in a change to any of the Building elevations (except the addition of canvas awnings) or the addition, deletion or modifications of windows or doors as long as the changes match the existing finishes.

125.41 (D)(1)(a)(7) The amendment does not change the location of any Structure on the property.

125.41 (D)(1)(a)(8) The amendment does not alter the location of any points of ingress or egress from the Public Right-Of-Way.

125.41 (D)(1)(b) Administrative review site plan amendments shall be reviewed by staff and may be approved by the City Manager. An Applicant may appeal the denial of a minor site plan amendment to the City Commission by paying the cost recovery fee for a full site plan review.

125.41 (D)(1)(c) City Commission review site plan amendments. Any site plan amendment that does not meet the criteria for an administrative review site plan amendment shall be considered as a City Commission review site plan amendment. City Commission review site plan amendments shall be processed in the same manner as site plan applications.

125.41 (E) ***Issuance of Development Order.***

125.41 (E)(1) Site Plans and site plan amendments that require City Commission approval.

The adoption of a resolution by the City Commission shall be considered as the Development Order for site plans and site plan amendments that require Commission approval. Subsequent to the adoption of that Order, a site plan reflecting all conditions of site plan approval and referencing the resolution or order number must be submitted to the City Manager, which shall constitute the approved site plan. At that time, a final Development Order shall be stamped on the plans reflecting compliance with all conditions

of site plan approval. Such Development Order stamp must be obtained within 180 days of adoption of the resolution approving the site plan. This time period may be extended for an additional 90 days upon approval of the City Commission. Notice for such an extension shall be the same as for the original site plan approval.

125.41 (E)(2) Administrative review Site Plan

The approval of an administrative review site plan by the City Manager shall be considered the final Development Order for that plan. A final Development Order shall be stamped on the plans reflecting compliance with all conditions of site plan approval.

125.41 (F) ***Effective period of site plan approval.***

125.41 (F)(1) City Commission review Site Plan

An approved City Commission review site plan shall be effective until the Development is completed except that if, after one Year from the date the site plan is approved by the City Commission a Building Permit for a principal Building has not been issued and remains in effect, the site plan shall be null and void. For the purpose of this section, a Building Permit for a principal Building shall cease to be in effect once required inspections have lapsed or once a certificate of completion or Certificate Of Occupancy is issued. In those cases where a Development includes more than one principal Building and it is contemplated that the Development shown on a site plan will not be completed with a Building Permit for a principal Building continuously in effect, approval by the City Commission of a phasing schedule must be obtained as part of the overall site plan approval. There shall be no extensions to this time frame. In the event that a natural or man-made disaster, act of God, or other such occurrence where the City has to suspend the issuance of Building Permits occurs during the one Year period to obtain a Building Permit for a principal structure, the City Manager may grant an extension of the expiration of the one Year period by the number of business days that the City has suspended the issuance of Building Permits plus up to 60 additional calendar days.

125.41 (F)(2) Administrative Review Site Plan

An approved administrative review site plan shall be effective until the Development is completed except that if, after one Year from the date the site plan is approved by the City Manager a Building Permit for a Principal Building has not been issued and remains in effect, the site plan shall be null and void. There shall be no extensions to this timeframe. In the event that a natural or man-made disaster, act of God, or other such occurrence where the City has to suspend the issuance of Building Permits occurs during the one Year period to obtain a Building Permit for a principal structure, the City Manager may grant an extension of the expiration of the one Year period by the number of business days that the City has suspended the issuance of Building Permits plus up to 60 additional calendar days.

125.41 (G) ***Conformity to recorded Plat.*** If a site plan depicts land previously recorded by Plat, the application for site plan approval or revised site plan approval shall conform to such Plat. [Note: Create a new section "Standards for Approval: Plat zoning regs, state Law, etc.]

125.41 (H) ***Conformity to zoning regulations.*** Development depicted in a site plan shall conform to all applicable zoning ordinances and regulations.

DESIGN REQUIREMENTS

§ 125.50 OFF-STREET PARKING FACILITIES.

125.50 (A) ***General design requirements.*** Internal site circulation shall follow a functional classification and hierarchical design criteria to assure that the movements between the Public Right-Of-Way, which is the high speed movement facility, and the Parking Stall, which is the terminal facility, are conducted in an efficient and orderly form. All streams of departing Traffic from the Parking Stalls in a parking lot shall be assembled and delivered to an internal collector facility that combines them into a few concentrated streams which will then be connected to the Public Right-Of-Way at a few properly spaced access locations.

125.50 (B) ***Functional elements of On-Site circulation system.*** Car Parking Stalls, Parking Aisles, driveways, Reservoir Areas and entrances are the basic functional elements of the On-Site circulation system. Additional elements, including but not being limited to perimeter roads, rear collector roads, service roads within the proposed Development, left turning lanes, right turning lanes, Traffic lights, Frontage roads in the Public Right-Of-Way immediately adjacent to the proposed Development may also be required.

125.50 (B)(1) ***Parking Stalls and Aisles.***

125.50 (B)(1)(a) The minimum size (in feet) of a Parking Stall space shall be as follows:

9' x 18' - standard space

9' x 23' - parallel space

10' x 25' - loading space

12' x 18' - handicap space

125.50 (B)(1)(b) The design of parking areas and the required number of parking spaces shall be in conformance with the City Code.

125.50 (B)(1)(c) All required Parking Stalls shall have direct and unobstructed access from a Parking Aisle.

125.50 (B)(1)(d) No Parking Stall shall be located within a driveway that connects directly to the external Roadway system, unless adequate vehicular Reservoir Areas are provided in accordance with §125.52.

125.50 (B)(1)(e) Access for emergency fire vehicles shall be in accordance with Fire Protection Standards.

125.50 (B)(1)(f) All off-street parking areas shall be so arranged and marked as to provide for orderly safe loading, unloading, parking, and storage of vehicles with individual Parking Stalls clearly defined with directional arrows and Traffic signs provided as necessary for Traffic Control.

125.50 (B)(1)(g) Acceptable plans must illustrate that proper consideration has been given to the surrounding Street plan, Traffic volumes, proposed Street improvements, vehicular Street capacities, pedestrian movements, and safety. Plans for adequate pedestrian movements shall include Sidewalks that are accessible by disabled persons connecting existing or planned bus stops, bus bays, and bus shelters; and the Roadway Sidewalk adjacent to the project. In addition, there shall be Sidewalks that are accessible by disabled persons connecting the Roadway Sidewalk and the interior Street system Sidewalk or, in the case of multi-family residential or non-residential Development, between the Roadway aislewalk and doorway entrance(s) to the Building(s). Where Sidewalks cross streets and driving aisles, proper curb drops and pavements markings delineating the cross walk shall be installed. Accessibility requirements shall be in conformance with the criteria outlined in the Florida Accessibility Code for Building Construction.

125.50 (B)(1)(h) All parking areas shall be so arranged so that if there are ten or more contiguous Parking Stalls along the same Parking Aisle, the eleventh space shall be a landscaped peninsula consistent with the provisions of the Landscape Chapter. Other suitable solutions or innovative designs may be substituted when approved by the City Manager.

125.50 (B)(2) ***Reserve and overflow parking regulations.*** Reserve and overflow parking shall be in conformance with the City Code. Other suitable solutions or innovative designs may be substituted when approved by the City Manager.

125.50 (B)(3) ***Driveways.***

125.50 (B)(3)(a) All Parking Aisles shall provide connectivity to a driveway.

125.50 (B)(3)(b) A parking lot which exceeds 60 Parking Stalls shall be designed with at least one two-way directional driveway loop system connecting the entrance to the Parking Stalls and the principal Building. Other innovative designs may be substituted when approved by the City Manager.

125.50 (B)(3)(c) The minimum distance to a driveway, service drive, or Parking Aisle from a Right-Of-Way shall be ten feet where there is no connection between the driveway and the Street.

125.50 (B)(3)(d) Two-way driveways shall be a minimum of 24 feet wide. Required widths shall be increased according to vehicle type. Curves along driveways shall be of

sufficient width to accommodate the anticipated design vehicle per AASHTO design criteria, particularly in industrial and commercial facilities.

125.50 (B)(3)(e) One-way driveways shall be a minimum of 14 feet wide for private drives and 15 feet wide off of main Streets. Required widths shall be increased according to vehicle type. Curves along driveways shall be of sufficient width to accommodate the anticipated design vehicle per AASHTO design criteria, particularly in industrial and commercial facilities.

125.50 (B)(3)(f) Any off-street parking facility shall have either driveway approaches of sufficient width to allow for two-way Traffic, or one way driveways connected to aisles, parking areas or maneuvering areas in such a manner as to permit Traffic to both enter and leave the property, facing forward, at the same time. A driveway which is only wide enough for one-way Traffic shall not be used for two-way access.

125.50 (B)(3)(g) Driving Aisles: Two-way driving aisles shall be a minimum of 24 feet wide. Two-way driving aisles located along the front of a retail center containing more than 50,000 square feet or that serve industrial Traffic comprising primarily of WB-40 design vehicles or larger shall be 30 feet wide. One-way driving aisles shall be a minimum of 14 feet wide, clearly marked for one-way Traffic. One-way driving aisle widths may be required to be 20 feet in width if needed for fire protection.

125.50 (B)(4) ***Circulation design.*** A parking lot abutting a Broward County Trafficway shall be designed for full circulation. A parking lot abutting a Street other than a Trafficway may be designed for partial circulation.

125.50 (B)(5) ***Parking and loading areas to be curbed.***

125.50 (B)(5)(a) Except for one-family and two-family Dwellings, all parking and loading areas shall be constructed with raised curb or wheel stops. The raised curb shall be constructed in such a manner as to prevent vehicles from crossing Sidewalks or other pedestrian walkways, other than by means of an approved driveway approach. FDOT Type "D" or Type "F" curbing shall be utilized along all curbed sections where vehicular impact can be reasonably anticipated. This includes the following:

125.50 (B)(5)(a)(1) Entire perimeter of terminal and interior islands, including the side of contiguous to the adjacent parking spaces(s).

125.50 (B)(5)(a)(2) Along all turning radii, and along the first five feet of straight tangent extending beyond each turning radii.

125.50 (B)(5)(a)(3) Along the curbed sections of driveway connections to Public Rights-Of-Way or connections to private collector Roadway systems.

125.50 (B)(5)(a)(4) Along all curvilinear curbed sections with a radius of curvature of 100 feet or less.

125.50 (B)(5)(b) Extruded curbing may be utilized on all other curbed areas or any areas protected by fixed wheel stops. Wheel stops shall be a maximum height of five inches.

125.50 (B)(5)(c) Parking Stalls which abut landscaped areas, Sidewalks, Structures, or property lines shall be designed with wheel stops or continuous curbing. The required wheel stops or curbing shall be located a minimum of 2 ½ feet from any landscaped area, Sidewalk or property line.

§ 125.51 LOADING FACILITIES.

125.51 (A) Truck loading and unloading areas are required for all Buildings and establishments which receive and/or ship materials or merchandise by truck. The number of loading spaces required shall be in conformance with the City Code.

125.51 (B) Off-street truck loading shall be required except as provided in (D) below. The off-street loading facility shall be designed to accommodate both the parking of and maneuvering of the design vehicle exclusive of those areas designated for aisles, driveways, or Parking Stalls.

125.51 (C) Off-Street Loading Areas shall be clearly marked with four-inch white diagonal lines, spaced 5.0 feet apart and at least one "No Parking Loading Zone" Sign (MUTCD R7-6).

125.51 (D) On-street loading shall be permitted on a local Cul-De-Sac Street abutting commercial and industrial Development. Where permitted such on-street loading areas shall berth the design vehicle exclusive of the Public Right-Of-Way.

§ 125.52 VEHICULAR RESERVOIR AREAS.

Adequate reservoir capacity shall be required for both inbound and outbound vehicles to facilitate the safe and efficient movement between the Public Right-Of-Way and the Development. An inbound reservoir shall be of sufficient size to ensure that vehicles will not obstruct the adjacent Roadway, the Sidewalk, and the circulation within the facility. An outbound reservoir shall be required to eliminate backup and delay of vehicles within the Development.

125.52 (A) ***Design.*** A Reservoir Area shall be designed to include a space of 12 feet wide by 22 feet long for each vehicle to be accommodated within the Reservoir Area and so that vehicles within the Reservoir Area do not block Parking Stalls, Parking Aisles, or driveways of off-street parking facilities.

125.52 (B) ***Adjacent to Trafficway.*** The number of vehicles required to be accommodated within a Reservoir Area adjacent to a Trafficway shall be in conformance with Table 3.

125.52 (C) ***Adjacent to non-trafficway Local Street.*** All off-street parking facilities shall provide a Reservoir Area at the point(s) of connection of a driveway with a Public Right-Of-Way. The Reservoir Area for any residential Use other than Single-Family detached, commercial Use or

industrial Use shall accommodate at least 2% of the number of Parking Stalls served by the driveway. For parking lots with fewer than 50 cars, the Reservoir Area shall be able to accommodate at least one car.

TABLE 3: VEHICLE RESERVOIR AREA REQUIREMENTS		
Type of Facility	**Inbound Vehicles**	**Outbound Vehicles**
Residential		
Attendant parking	10% of the total parking capacity of the facility	1 space
Self-parking	5 spaces or 1% of the total parking capacity (use the greater figure)	1 space
Gatehouse (residential)	5 spaces*	1 space
Nonresidential		
Attendant parking	10% of the total parking capacity of the facility	1 space
Self-parking	5 spaces or 1% of the total parking capacity (use the greater figure)	1 space
Ticket gate (ticket dispensing machine)	4 spaces minimum*	1 space
Cashier booth (tickets dispensed manually)	6 spaces minimum*	1 space
Gatehouse (commercial)	5 spaces or 1% of the total parking capacity (use the greater figure)	2 spaces
Note: 1 reservoir space is 12 ft. X 22 ft. *Requirements are subject to condition-specific queuing study, and may be greater than the number of spaces shown, subject to the approval of the City Manager.		

§ 125.53 ACCESS FOR FIRE-RESCUE VEHICLES.

125.53 (A) Structures intended for Principal Uses shall be made accessible to the following type of vehicles:

USE	*TYPE OF VEHICLE*
Residential Uses, other than Single-Family or Duplex	Single Unit Truck (SU)
Commercial Uses	Single Unit Truck and semi-Trailer (WB-40) combination intermediate
Industrial Uses	Single Unit Truck (SU) and semi-Trailer - full Trailer combination (WB-60)
Definitions of, as well as, required specifications for the above vehicle types shall be those found in AASHTO Geometric Highway Design.	

125.53 (B) ***Fire rescue emergency access roads***: Approved fire rescue emergency access roads shall be paved and provided for every Structure, Building, or portion thereof constructed or relocated. Fire rescue emergency access paved roads shall consist of Roadways, fire lanes, access areas, parking lots lanes, or a combination thereof. Fire rescue emergency access paved roads shall be continuous and extend around the perimeter of the Buildings and/or Structures, and shall be maintained free of any impediments or obstructions.

125.53 (B)(1) ***Multiple access roads.*** More than one fire rescue emergency access paved road, separate and remote, into the internal on site circulation system of the Development, shall be provided when it is determined by the authority having jurisdiction that access by a single road could be impaired by vehicle congestion, condition of terrain, climatic conditions, or other factors that could limit access.

125.53 (B)(2) When, at the determination of the City, fire rescue emergency access roads cannot be installed due to location on property, topography, waterways, nonnegotiable grades, or other similar conditions, the City shall be authorized to require additional fire protection features as equivalent alternative methods for compliance such as, but not limited to, automatic fire sprinklers.

125.53 (B)(3) ***Emergency access to Buildings or Structures.*** A Structure shall be made accessible to all elevations for fire rescue Emergency use. In all cases, a minimum of two (2) elevations shall be made accessible. In the cases where only the minimum access is available, the City shall be authorized to require additional fire protection features as equivalent alternative methods for compliance.

Fire Rescue Emergency Access Road Specifications

125.53 (C) With the exception of one story, one- and two- family dwellings which are not for adequate accessibility for fire protection purposes, laddering areas designated for fire rescue emergency use shall conform to the Building Code and the following additional requirements:

125.53 (C)(1) Fire rescue emergency access roads, access paved areas, or fire lanes shall have an unobstructed width of not less than 20 feet. The City may increase the required width for fire rescue emergency access paved roads, access areas or fire lanes when the minimum width is not adequate to accommodate fire apparatus.

125.53 (C)(2) Fire rescue emergency access paved roads, access paved areas or fire lanes shall have a minimum unobstructed vertical clearance of at least 14 feet and shall have a Sign indicating the minimum vertical clearance. The City may require an increase to the required vertical clearance for fire rescue emergency access paved roads, access paved areas or fire lanes when the minimum vertical clearance is not adequate to accommodate fire apparatus.

125.53 (C)(3) When, at the determination of the City, minimum vertical clearance and/or widths for fire rescue emergency access paved roads, access areas, or fire lanes cannot be met due to location on property, topography, waterways, nonnegotiable grades, or other similar conditions, the vertical clearances and/or widths may be permitted to be reduced, provided such reduction does not impair access by fire apparatus, and approved signs are installed and maintained indicating the established vertical clearance and/or width approved. The City may require additional fire protection features as equivalent alternative methods for compliance.

125.53 (C)(4) Fire rescue emergency access paved roads, access paved areas, or fire lanes shall be capable of meeting the needs of vehicles considered as WB-40, as defined by the AASHTO Geometric Highway Design, shall be designed to accommodate fire apparatus weighing a minimum of 32 tons, and shall be designed and provided with an approved, all-weather driving, solid surface material such as, solid pavement, asphalt, concrete or similar materials approved by the City.

125.53 (C)(5) Grade: The gradient for a fire rescue emergency access paved roads, access paved areas, or fire lanes shall not exceed the maximum approved.

125.53 (C)(5)(a) The angle of approach and departure for any means of fire rescue emergency access shall not exceed 1 foot drop in 20 feet or the design limitations of the fire apparatus of the fire department, and shall be subject to approval by the City.

125.53 (C)(6) Fire rescue emergency access paved roads, access paved areas, or fire lanes connecting to Roadways shall be provided with curb cuts extending at least 2 feet beyond each edge of the emergency access paved roads, access paved areas, or fire lanes.

125.53 (C)(7) A fire rescue emergency access paved road shall extend to within 50 feet of at least one exterior egress door that can be opened from the outside and that provides access to the interior of the Building.

125.53 (C)(8) Fire rescue emergency access paved roads shall be provided such that any portion of an exterior wall of the first Story of the Building or Structure is located not more than 150 feet from fire rescue emergency access roads as measured by an approved route around the exterior of the Building or Structure. When Buildings are protected throughout with an approved automatic sprinkler system that is installed in accordance with NFPA 13, NFPA 13D, or NFPA 13R, the distance shall be permitted to be increased to 450 feet.

125.53 (D) ***Turning radius***. The turning radius of a fire rescue emergency access paved road, access area, or fire lane shall be as approved by the City.

125.53 (D)(1) Turns in fire rescue emergency access roads, access areas, or fire lanes shall maintain the minimum required emergency access road width.

125.53 (D)(2) Fire rescue emergency access roads, access areas, or fire lanes shall be designed to have a minimum outside fire apparatus turning radius of 50 feet, and an inside fire apparatus turning radius of 38 feet.

125.53 (E) Dead ends and fire apparatus turnaround requirements: Dead ends in excess of 75 feet in length shall be provided with approved fire apparatus turnarounds as provided below:

125.53 (E)(1) Fire rescue emergency access roads, access areas, or fire lanes with dead ends of more than 75 feet in length shall be designed and constructed with an approved paved turnaround at the closed end. Design and type of paved turnaround shall be determined and approved by the City.

125.53 (E)(2) Fire rescue emergency access roads, access areas, or fire lanes with dead ends of more than 150 feet in length shall be designed and constructed with an approved paved Cul-De-Sac at the closed end, having a minimum diameter of 100 feet, not including curbs or Sidewalks. At the discretion of the City, an alternative equivalent method of design and Construction for the required paved Cul-De-Sac turnaround may be approved by the City.

125.53 (F) ***Bridges within fire rescue emergency access roads***: When a bridge is required to be used as part of a fire rescue emergency access road, access area, or fire lane, it shall be constructed and maintained in accordance with nationally recognized standards. Bridges shall be designed for a live load sufficient to carry the imposed loads of fire apparatus, with a minimum design and Construction to accommodate fire apparatus weighing a minimum of 32 tons, and shall be designed and provided with an approved, all-weather driving, solid surface material such as, solid pavement, asphalt, concrete or similar materials approved by the City. Vehicle load limits shall be posted at both entrances to bridges where required by the City.

125.53 (G) ***Laddering Areas.*** When, at the determination of the City, laddering areas designated for fire rescue Emergency use are required for accessibility to Buildings and Structures for fire rescue operations, the laddering areas shall be designed and constructed in accordance with the following requirements:

125.53 (G)(1) Laddering areas shall have a minimum dimension of 24 feet in width by 50 feet in length, with a cross slope of less than five percent.

125.53 (G)(2) Laddering areas shall be positioned and constructed with the inner edge no closer than 10 feet, nor further than 30 feet from the Building or Structure.

125.53 (G)(3) Surface Construction of laddering areas shall be capable of meeting the needs of vehicles considered as WB-40 as defined by the AASHTO Geometric Highway Design, and shall be designed to accommodate fire apparatus weighing a minimum of 32 tons.

125.53 (G)(4) Laddering areas shall be designed and provided with an approved, all-weather driving, solid surface material such as, solid pavement, asphalt, concrete or similar materials approved by the City.

125.53 (G)(5) Laddering areas shall be designed and constructed with no vertical obstructions or impediments.

125.53 (G)(6) Laddering areas shall be clearly designated and properly marked as specified by the City.

125.53 (H) ***Fire rescue emergency access road markings***: Fire rescue emergency access roads, access areas, or fire lanes shall be clearly designated and marked for this purpose. Where required by the City, approved signs, markings or other approved notices shall be provided and maintained to identify fire rescue emergency access roads, access areas, or fire lanes.

125.53 (I) ***Physical Break-Away Barrier Devices***. The design and use of physical break-away barrier devices may be approved by the City. When approved by the City, physical break-away barriers may be installed within designated fire rescue emergency access paved roads, access areas, or fire lanes. Such barriers shall be constructed in such a manner that they will immediately break-away in an Emergency situation.

§ 125.54 DRIVEWAY ENTRANCE FROM PUBLIC OR PRIVATE RIGHT-OF-WAY.

125.54 (A) If a driveway connects Development to a Trafficway, or a Street within a Trafficway Corridor, the design of driveways shall be regulated as follows:

125.54 (A)(1) Any Development with access to a Trafficway shall have either driveway approaches of sufficient width to allow for two-way Traffic, or one-way driveways connected to aisles, parking areas, or maneuvering areas in such a manner as to permit Traffic to both enter and leave the Development, facing forward, at the same time. A driveway which is only wide enough for one-way Traffic shall not be used for two-way access.

125.54 (A)(2) The area within the Development to which the driveway provides access shall be of sufficient size to allow all necessary functions for loading, unloading, and parking maneuvers to be carried out on Private Property and completely off the Street Right-Of-Way.

125.54 (B) The following requirements apply to driveways connecting Development to a nontrafficway corridor (local) Street.

125.54 (B)(1) ***Design requirements.***

125.54 (B)(1)(a) The area within the Development to which the driveway provides access shall be of sufficient size to allow all necessary functions for loading, unloading, and parking maneuvers to be carried out on Private Property and completely off the Street Right-Of-Way.

125.54 (B)(1)(b) The minimum distance from the Ultimate Right-Of-Way Line at any ingress or egress driveway to any interior service drive or Parking Stall with direct access to such driveway shall be 25 feet.

125.54 (B)(2) ***Number and location of driveway entrances.*** In order to provide the maximum safety with the least interference to the Traffic flow on public Streets, and to provide ease and convenience in ingress and egress to Private Property, the number and location of driveways shall be regulated relative to the intensity or size of the property served and the amount of Frontage which that property has on a given Street as follows:

125.54 (B)(2)(a) One driveway shall be permitted for ingress and egress purposes to a single property or Development.

125.54 (B)(2)(b) Two driveways entering on a particular Street from a single property or Development may be permitted if all other requirements of this section are met and if the minimum driveway centerline spacing between the two driveways equals or exceeds 150 feet. The centerline spacing between driveways on a Single-Family or Duplex Lot shall equal or exceed 35 feet.

125.54 (B)(2)(c) Three driveways entering on a particular Street from a single property or Development may be permitted if all other requirements of this section are met and if the minimum driveway spacing between adjacent driveways equals or exceeds 200 feet.

125.54 (B)(2)(d) In general, not more than three driveways will be permitted from a single property or Development. However, in the case of extensive property Development (property exceeding ten acres in total land area and/or containing more than 1,000 Parking Stalls), additional driveways may be permitted provided all other requirements of this section are met and the minimum driveway spacing between adjacent driveways equals or exceeds 300 feet.

125.54 (B)(2)(e) The minimum driveway centerline between driveways on adjacent properties shall be 125 feet. This spacing may be reduced to 75 feet if the posted speed limit on the Street is 25 mph or less, and the adjacent driveways serve less than 50 peak hour trips, or the driveways are restricted to right-turns-in only or right-turns-out only. The minimum driveway spacing between driveways of adjacent Single-Family or Duplex Lots shall be five feet measured between the closest edge of the first driveway and the closest edge of the second driveway.

125.54 (C) ***Driveway entrance width according to type.***

125.54 (C)(1) ***Ramp-type or Swale-type driveway entrance.***

125.54 (C)(1)(a)(1) Except as provided in 125.54 (C)(2) below, all driveways shall be constructed with the standard ramp type or Swale-type driveway entrance and shall conform to the following width requirements.

WIDTH REQUIREMENTS		
Use	Minimum (ft.)	Maximum (ft.)
Residential	12	24
Other Uses:		
One-way	15	24
Two-way	24	44
(Widths to be measured at the Street Right-Of-Way line)		

125.54 (C)(1)(a)(2) The width of a curb opening for a ramp type driveway entrance shall not exceed the driveway width by more than five feet on each side.

125.54 (C)(2) ***Street-type driveway entrance.*** Construction of a Street-type driveway shall be required for entrances of any Development which includes a parking area for 300 or more vehicles or where the Development anticipates substantial loading or trucking operations. Such driveway shall be a minimum width of 28 feet and a maximum width of 60 feet.

125.54 (D) ***Residential driveway dimensions.*** The minimum dimensions of an isolated driveway serving a Single-Family or Duplex Lot, or serving an individual unit within a townhome Development, shall be ten feet in width and 20 feet in length.

125.54 (E) ***Limitations on driveway entrance improvements.***

125.54 (E)(1) There shall be a minimum of 15 feet of straight tangent length between a driveway and the radius return or chord of the Ultimate Right-Of-Way of an intersection of Local Streets. At all other intersections the minimum straight tangent length shall be 100 feet.

125.54 (E)(2) No driveway entrance shall include any public facility such as Traffic signal poles, crosswalks, loading zones, Utility facilities, fire alarm supports, meter boxes, Sewer clean outs, or other similar type Structures.

125.54 (E)(3) Within the Ultimate Right-Of-Way limits, the maximum recommended driveway grade is approximately 3%. The maximum allowable grade is 4.2% or one-half inch per foot. The maximum slope immediately beyond the Ultimate Right-Of-Way line shall not change in excess of 5% for either angle of approach or break over angle. Variations from these standards shall be permitted if adherence to these standards would cause incompatibility with existing Swales.

125.54 (E)(4) Existing driveway approaches shall not be relocated, altered, or reconstructed without approval for relocation, alteration, or reconstruction of such driveway approaches. When the Use of any driveway approach is changed, making any portion or all of the driveway approach unnecessary, the developer of the abutting property shall

obtain a permit to abandon the driveway approach and shall, at the developer's expense, replace all necessary curbs, gutters, Swale areas, and Sidewalks.

125.54 (E)(5) If the closest intersection involves two Streets classified as Arterial or collector, then Traffic movements to and from any driveway within 125 feet of an intersection with a collector and 250 feet of an intersection with an Arterial shall be limited to right turns only. This distance shall be measured from the closest radius return or chord on the intersection tot he closest edge of the driveway.

125.54 (E)(6) No driveway shall be constructed prior to issuance of a permit for work in the Right-Of-Way by the appropriate governmental agency.

§ 125.55 LIMITATIONS ON IMPROVEMENTS IN THE ULTIMATE RIGHT-OF-WAY.

125.55 (A) No obstructions of any type that are deemed unsafe by the City shall be left in the Ultimate Right-Of-Way.

125.55 (B) No bus shelter or bus bench may be placed in the Ultimate Right-Of-Way by any entity other than the City.

§ 125.56 SIGHT DISTANCE.

125.56 (A) ***Cross-visibility requirements at the intersection of driveways and Public Rights-Of-Way.***

125.56 (A)(1) Sight triangle requirements for the intersections of public Roadways shall conform with the criteria outlined in the following standards:

125.56 (A)(1)(a) AASHTO's, A Policy on Geometric Design of Highways and Streets;

125.56 (A)(1)(b) Broward County Minimum Standards Applicable to Public Rights of Way Under Broward County Jurisdiction; and

125.56 (A)(1)(c) FDOT Roadway and Traffic Design Standards, Index Nos. 545, 546 and 700.

125.56 (A)(1)(d) FDOT Manual of Uniform Minimum Standards for Design, Construction and Maintenance for Streets and Highways.

125.56 (A)(2) The intersection of private Roadway systems with public Roadways, or intersections of private Roadways that have direct access to the public Roadway network, shall also conform to the above criteria to the extent that they reasonably apply.

125.56 (A)(3) If an individual private driveway intersects with a Public Right-Of-Way, no sight distance obstruction will be permitted within the ten-foot by 50-foot triangular area formed by the intersection of each side of the driveway and the Ultimate Right-Of-Way Lines with the driveway side of the triangle being ten feet in length, the Public Right-Of-

Way side of the triangle being 50 feet in length, and the third side of the triangle being the line connecting the ends of the two other sides.

125.56 (A)(4) These requirements may be reduced to ten-foot by 35-foot, subject to City approval, if the public Roadway is a Local Street with a posted speed limit of 25 mph or less.

125.56 (A)(5) For all On-Site intersections of private internal Roadways, driveways and/or private drive aisles, a minimum ten-foot by 25-foot sight triangle must be maintained from the intersecting edges of the travel way, with the ten-foot side of the triangle being along the minor drive aisle and the 25-foot side of the triangle being along the major drive aisle.

125.56 (B) ***Setback areas.*** Within the setback area included in the Street or driveway intersection sight triangle thereby created, it shall be unlawful to install, set out, or maintain, or to allow the installation, setting out, or maintenance of, any Sign, Hedge, shrubbery, Tree, natural growth, or other obstruction of any kind which obstructs cross-visibility at a level between 24 inches and 96 inches above the level of the center of the adjacent intersection.

125.56 (C) ***Obstructions.*** Any fence, Hedge, or other object which will cause a sight visibility obstruction within 100 feet of a driveway or cross Street, must be located outside of the clear sight triangle.

125.56 (D) ***Cross-visibility requirements at pedestrian crosswalks and other areas of pedestrian concentration.*** If a crosswalk intersects a vehicular access aisle, driveway, or an Ultimate Right-Of-Way, there shall be no sight obstruction within a triangular area of property on both sides of a crosswalk or walkway formed by the intersection of each side of the walkway and the Ultimate Right-Of-Way Line or aisle with two sides of each triangle being ten feet in length from the point of intersection and the third side being a line connecting the ends of the two sides.

125.56 (E) ***Sight triangles.***

125.56 (E)(1) Within the triangular areas described above, it shall not be permissible to install, set out, or maintain, or to allow the installation, setting out, or maintenance of, either temporarily or permanently, any vehicular parking space, Sign, wall, Hedge, shrubbery, Tree, earth mound, natural growth, or other obstruction of any kind which obstructs cross-visibility at a level between 30 inches and eight feet above the level of the center of the adjacent intersection. Any wall or fence within the sight triangle must be constructed in such a manner as to provide adequate cross-visibility over or through the Structure between 30 inches and eight feet in Height above the driving surface.

125.56 (E)(2) The following will be permitted within the triangular area described above:

125.56 (E)(2)(a) Trees having limbs and foliage trimmed in such a manner that no limbs or foliage extend into the area between 30 inches and eight feet above the level of the center of the adjacent intersection. Trees must be so located so as not to create a Traffic hazard. Landscaping except required grass or Ground Cover shall not be located closer

than five feet from the edge of any Roadway pavement, and three feet from the edge of any alley or driveway pavement.

125.56 (E)(2)(b) Fire hydrants, public Utility Poles, street markers, and Traffic Control Devices.

§ 125.57 ACCESS TO TRAFFICWAY CORRIDORS.

Access and design criteria associated with designated Broward County Trafficway Corridors shall be in conformance with the criteria outlined in the applicable sections of the Broward County Land Development Code.

§ 125.58 DESIGN OF TRAFFICWAY CORRIDORS.

A site connected to a Street at any point within a Trafficway Corridor shall meet the design criteria, requirements, and standards of the applicable sections of the Broward County Land Development Code.

§ 125.59 DESIGN OF NONTRAFFICWAY CORRIDORS.

A site connected to a Street which is not within a Trafficway Corridor shall meet the design criteria, requirements and standards of §125.60 and §125.61.

§ 125.60 STANDARDS FOR LOCAL ROADWAY IMPROVEMENTS.

125.60 (A) ***Improvements required.*** An Applicant shall construct or bond for the Construction, prior to issuance of any Development Order, all Roadway and drainage improvements for those Rights-Of-Way lying within or adjacent to the proposed Development and necessary to accommodate the Traffic generated by the Development. Such improvements shall be in accordance with all applicable Laws and standards. The Applicant shall provide a cash bond in an amount equal to:

125.60 (A)(1) 400% of the estimated cost of a project for any project less than$25,000;

125.60 (A)(2) 300% of the estimated cost of a project for any project between $25,000 and $100,000;

125.60 (A)(3) 200% of the estimated cost of the project for any project greater than $100,000.

125.60 (B) ***On-Site improvements.*** An Applicant shall be required to construct or bond for the Construction of the On-Site improvements required by the provisions of this subchapter and any additional improvements necessary for Traffic safety, including but not limited to the following: pavement, rock base, fill, curbs, gutters, Sidewalks, Bikeways, guardrail, shoulder areas, Swales, roadside recovery areas, bridges, drainage outlets, catch basins, drainage pipes, culverts, drainage ditches, headwalls, endwalls, rip-rap, Traffic signals and interconnecting facilities, Traffic-Control

signs and pavement markings, Street name signs, identification signs, left and right turn lanes, Median openings, bus turnouts, and Traffic separators.

125.60 (C) ***Off-Site improvements.*** An Applicant shall be required to construct or bond for the Construction of the Roadway and drainage improvements on property adjacent to the proposed Development necessary to connect the new Development to an existing adequately paved adjacent Street system.

125.60 (D) ***Access to Development.***

125.60 (D)(1) Every Lot or parcel shall be served from a publicly dedicated Street; provided however that an Applicant may retain as private a Local Street or a collector nontrafficway Street if the following conditions are met:

125.60 (D)(1)(a) Public Right-Of-Way is not required in order to serve adjacent Development that is existing or projected on the City of Weston Land Use Plan, as amended;

125.60 (D)(1)(b) A permanent access easement is granted for service and emergency vehicles and for maintenance of public and semi-public utilities;

125.60 (D)(1)(c) A reciprocal easement for ingress and egress is granted all residents of the Development; and

125.60 (D)(1)(d) Private local or collector Streets comply with all applicable Construction standards as outlined in §125.61.

125.60 (D)(2) Where Development borders on or contains a Right-Of-Way for an expressway, drainage canal, or waterway, a Street may be required approximately parallel to and on each side of such Right-Of-Way, at a distance suitable for the appropriate Use of the intervening land and in compliance with all provisions of this subchapter.

125.60 (D)(3) Reserve Strips controlling access to Streets shall be prohibited.

125.60 (D)(4) New half or partial Streets shall not be permitted unless the half or partial Street constitutes adequate public access to the Development as determined by the City Manager. Whenever a tract borders on an existing half or partial Street the other part of the Street shall be dedicated within such tract.

125.60 (E) ***Arrangement of Streets.***

125.60 (E)(1) The pattern of Streets in new subdivisions shall provide for the continuation of existing Streets properly aligned from adjoining areas, or for their proper projection where adjoining land is not subdivided. Where Street extensions into adjacent Undeveloped Land are necessary to ensure a coordinated Street system, provisions for such future Street or Streets shall be made.

125.60 (E)(2) The arrangement of Streets in new subdivisions or Developments shall facilitate and coordinate with the desirable future platting of adjoining unplatted property of a similar character, and provide for local circulation and convenient access to neighborhood facilities.

125.60 (E)(3) Local residential Streets shall be arranged so as to discourage their Use by through Traffic. Residential Streets shall not connect with industrial areas except in cases where it is unavoidable, as determined by the City Manager.

125.60 (F) ***Right-Of-Way required.*** An Applicant will be required to dedicate Right-Of-Way in addition to the Right-Of-Way requirements of Tables 4, 5, 6, and 7 in the following situations:

125.60 (F)(1) If proposed access from the Development to an existing dedicated and accepted Street does not meet the total Right-Of-Way requirement for a complete road.

125.60 (F)(2) If a Development has a greater impact on an existing road than that for which the Roadway width had previously been designed.

125.60 (F)(3) If a Development abuts or contains an existing Street of inadequate Right-Of-Way width.

125.60 (G) ***Turning radius specifications for local Roadways within Developments***. Streets shall be designed to have a minimum outside fire apparatus turning radius of 50 feet, and an inside fire apparatus turning radius of 38 feet.

§ 125.61 DESIGN CRITERIA FOR LOCAL ROADWAYS.

The design of Local Streets shall comply with the requirements of the provisions and Tables below, depending on the type of Development proposed. Deviations from the numerical standards of Tables 4, 5, 6 and 7 may be allowed but only where approved by the City Manager upon a finding that substantially equivalent protection of the public safety can be achieved by alternative standards. If a proposed Development includes more than one type of Use, the highest criteria shall apply.

125.61 (A) ***Residential Development.*** Residential Streets shall be adequate to permit neighborhood Traffic circulation to flow from the highest element of the hierarchical classification, the expressway, Arterial, or collector, to the lowest element, the local residential Street. Circulation within a residential Development shall be adequate when the criteria of the Tables below are met and when collectors and Local Streets are provided that meet the standards below:

125.61 (A)(1) ***Design criteria.*** If the gross density of a residential Development is one unit per 2½ acres or less, the Development shall conform to the minimum design standards of Table 4. If the gross density of a residential Development is between one unit per acre and one unit per 2½ acres, the Development shall conform to the minimum design standards of Table 5. All other residential Development shall conform to the minimum design standards of Table 6.

TABLE 4: DESIGN CRITERIA FOR STREETS FOR RURAL RESIDENTIAL DEVELOPMENTS (Minimum Lot size: More than 2.5 acres gross)				
Collector (Nontrafficway)			***Local Streets***	
Collector	***Four-lane collector***	***Two-lane local***	***Cul-De-Sac***	***Local***
Typical Volume	6,500-18,000 vpd	2,000-5,000 vpd	300-2,000 vpd	0-300(a) vpd
Residential Access	Limited	Limited	Yes	Yes
Design Speed	45 mph	40 mph	35 mph	30 mph
Typical Space Between Streets*	½ mile	¼ mile	660 feet	330 feet*
Intersection Space Maximum	No Maximum(b)	2 miles(b)	N/A	N/A
Intersection Space Minimum	1,320 ft.(b)	660 ft.(b)	250 ft.(c)	250 ft.(c)
Lanes	4	2	2	2
Minimum Pavement	52 ft.(g)	28 ft.(g)	22 ft.	22 ft.
Pavement Mark/Signing	Yes (d)	Yes (d)	Yes (d)	Yes (d)
Driveway Design	Swale-Drive (e)	Swale-Drive (e)	Swale-Drive(e)	Swale-Drive (e)
Parking-On Street	Prohibited	Prohibited	Prohibited	Prohibited
Curbing Along Intersection Radii	Optional	Optional	Optional	Optional
Median	Yes	No	No	No
Turn Lanes*	Yes (f)	Yes (f)	No	No
Traffic Signal	As Warranted	As Warranted	No	No
Pedestrian Crossing	Intersection Only(d)	Intersection Only(d)	Intersection Only(d)	Intersection Only (d)
Building Setback*	25 ft. min.	25 ft. min.	25 ft. min.	25 ft. min.
Approach Widening (Intersection Improvement)*	Yes	Yes	No	No
ROW*	80 ft.	60-80 ft.(e)	50 ft.	50 ft.
Design Vehicle (Geom)	WB-60 & SU	WB-60 & SU	WB 40	WB 40
Corners (ROW)	30 ft. chord	30 ft. chord	25 ft. radius	25 ft. radius
Bikeways*	Yes	Yes	No	No
Sidewalks	No	No	No	No

* Further explanation in provisions of §§ 125.50-125.65
(a) Over 300 vpd may be allowed if an alternate emergency access is provided.
(b) Or alternate approved by the City Manager based upon land planning and Traffic analysis.
(c) See § 125.61(A)(3)(a).
(d) As delineated in the Manual on Uniform Traffic Control Devices (MUTCD).
(e) Or alternate approved by the City Manager.

TABLE 4: DESIGN CRITERIA FOR STREETS FOR RURAL RESIDENTIAL DEVELOPMENTS (Minimum Lot size: More than 2.5 acres gross)				
Collector (Nontrafficway)			***Local Streets***	
Collector	***Four-lane collector***	***Two-lane local***	***Cul-De-Sac***	***Local***
(f) On Collectors--For Collector/Collector Intersections or Local/Collector Intersections with more than 1000 vpd. (g) The outermost lanes shall be two feet wider than the interior lanes if Right-Of-Way is available. N/A Not applicable.				

TABLE 5: DESIGN CRITERIA FOR STREETS FOR LOW DENSITY RESIDENTIAL DEVELOPMENTS (35,000 square feet net (a) to 2.5 acres gross)				
	Collector (Nontrafficway)		**Local Streets**	
	Four-lane collector	Two-lane collector	Local	Local Cul-De-Sac
Typical Volume	6,500- 18,000 vpd	2,000- 6,500 vpd	300(d)- 2,000 vpd	0- 300(d) vpd
Direct Access	Limited (c)	Limited (c)	Yes	Yes
Design Speed	45 mph	40 mph	35 mph	30 mph
*Typical Space Between Streets	½ mile	½ mile	330 ft.	330 ft.*
Intersection Space Maximum	No Maximum(d)	2 miles (d)	½ mile	N/A
Intersection Space Minimum	660 ft.	660 ft.	250 ft. (e)	250 ft. (e)
Lanes	4	2	2	2
Minimum Pavement	52 ft. (h)	28 ft. (h)	24 ft.	22 ft.
Pavement Mark/Signing	Yes (f)	Yes (f)	Yes (f)	Yes (f)
Driveway Design	Swale-Drive (d)	Swale-Drive (d)	Swale-Drive(d)	Swale-Drive (d)
Valley Gutter	No	No	Yes	Yes
Parking - On Street	Prohibited	Prohibited	Prohibited	Prohibited

TABLE 5: DESIGN CRITERIA FOR STREETS FOR LOW DENSITY RESIDENTIAL DEVELOPMENTS
(35,000 square feet net (a) to 2.5 acres gross)

	Collector (Nontrafficway)		**Local Streets**	
	Four-lane collector	Two-lane collector	Local	Local Cul-De-Sac
Median	Yes	No	No	No
Turn Lanes*	Yes (g)	Yes (g)	No	No
Traffic Signal	As Warranted	As Warranted	No	No
Pedestrian Crossing	Intersection Only (f)	Intersection Only (f)	Intersection Only (f)	Intersection Only (f)
Building Setback*	25 ft. min.	25 ft. min.	25 ft. min.	25 ft. min.
Approach Widening (Intersection Improvement)*	Yes	Yes	No	NoROW*80 ft.60-80 ft. (e)50 ft.50 ft.
Design Vehicle (Geom)	WB-60 & SU	WB-60 & SU	WB 40	WB 40
Corners (ROW)	30 ft. chord	30 ft. chord	25 ft. radius	25 ft. radius
Bikeways*	Yes	Yes	No	No
Sidewalks	Yes	Yes	Yes	Yes
Curbing along Intersection Radii	Yes	Yes	Yes	Yes

*Further explanation in provisions of §§ 125.50-125.65.

(a) Net = Fee Simple Ownership.

(b) Over 300 vpd may be allowed if an alternate emergency access is provided.

(c) Residential access may be allowed for Lots with a minimum of 200 feet Frontage or for collectors if volume does not exceed a projection of 3000 vpd.

(d) Or alternate approved by the City Manager.

TABLE 5: DESIGN CRITERIA FOR STREETS FOR LOW DENSITY RESIDENTIAL DEVELOPMENTS
(35,000 square feet net (a) to 2.5 acres gross)

	Collector (Nontrafficway)		**Local Streets**	
	Four-lane collector	Two-lane collector	Local	Local Cul-De-Sac

(e) See § 125.61(A)(3)(a).

(f) As delineated in the Manual on Uniform Traffic Control Devices (MUTCD).

(g) On Collectors--For Collector/Collector Intersections or Local/Collector Intersections with more than 1000 vpd.

(h) The outermost lanes shall be two feet wider than the interior lanes if Right-Of-Way is not available.

N/A Not Applicable.

TABLE 6: DESIGN CRITERIA FOR STREETS FOR RESIDENTIAL DEVELOPMENTS

	Collector (Nontrafficway)		**Local Streets**	
	Four-Lane Collector	**Two-Lane Collector**	**Local**	**Local Cul-De-Sac**
Typical Volume	8,500- 20,400 vpd	4,000- 8,500 vpd	500- 4,000 vpd	0- 500 vpd
Residential Access	Limited (a)	Limited (a)	Yes	Yes
Design Speed	45 mph	40 mph	35 mph	30 mph
Typical Space Between Streets*	½ mile	¼ mile	260 ft. (c)	260 ft.(b)(c)*
Intersection Space Maximum	1 mile (c)	½ mile	½ mile	660 ft. (c)
Intersection Space Minimum	660 ft.	330 ft.	250 ft. (b)	250 ft. (b)
Lanes	4	2	2	2
Minimum	52 ft. (f)	28 ft. (f)	24 ft.	24 ft.

TABLE 6: DESIGN CRITERIA FOR STREETS FOR RESIDENTIAL DEVELOPMENTS

	Collector (Nontrafficway)		**Local Streets**	
	Four-Lane Collector	**Two-Lane Collector**	**Local**	**Local Cul-De-Sac**
Pavement				
Pavement Mark/Signing	Yes (d)	Yes (d)	Yes (d)	Yes (d)
Driveway Design	Prohibited	Ramp-Type (c)	Swale-Drive (c)	Swale-Drive (c)
Valley Gutter	No	No	Yes	Yes
Parking - On Street	Prohibited	Prohibited	Prohibited	Prohibited
Median	Yes	No	No	No
Turn Lanes*	Yes (e)	Yes (e)	Yes (e)	No
Traffic Signal	As Warranted	As Warranted	As Warranted	
Pedestrian Crossing	Intersection Only (d)	Intersection Only (d)	Intersection Only (d)	Intersection Only (d)
Building Setback*	10 ft. min.	10 ft. min.	10 ft. min.	10 ft. min.
Approach Widening (Intersection Improvement)	Yes	Yes	As Warranted	No
ROW*	80 ft.	80 ft. (c)	50-60 ft.	50-60 ft.
Design Vehicle (Geom)	WB-60 & SU	WB-60 & SU	WB 60 & SU	WB 60 & SU
Corners (ROW)	30 ft. chord	30-25 ft. chord	25 ft. chord (c)	25 ft. chord (c)
Bikeways*	Yes	Yes	No	No
Curbing Along Intersection Radii	Yes	Yes	Yes	Yes

* Further explanation in provisions of §§ 125.50-125.65.

(a) See § 125.61(A)(2)(b) for Multi-Family Development Exception.

(b) Or 125 ft. for opposing offset "T" intersections.

(c) Or alternate approved by the City Manager.

(d) As delineated in the Manual on Uniform Traffic Control Devices (MUTCD).

(e) On Collectors--For Collector/Collector Intersections or Local/Collector Intersections with more than 1,000 vpd.

(f) The outermost lanes shall be two feet wider than the interior lanes if Right-Of-Way is available.

125.61 (A)(2) ***Residential collector Street.*** The residential collector Street serves as the principal circulation facility within the residential neighborhood. Its function is to collect Traffic from the interior and deliver it to the closest perimeter intra-neighborhood transportation between the residential neighborhood and the local centers of attraction such as neighborhood shopping centers, schools, and neighborhood parks.

125.61 (A)(2)(a) Collectors shall penetrate residential Development without forming a continuous network, thus discouraging through Traffic. When discontinuity of local collectors is obtained by offsetting the intersections with the Arterials or other collector Streets, such offsetting shall comply with the following:

125.61 (A)(2)(a)(1) A collector may intersect an Arterial but only if aligned with and extending an existing collector which intersects the Arterial or at a minimum distance of 1,320 feet from the intersection of an existing collector and the Arterial, or at a minimum distance of 1,420 feet from the intersection of two Arterials.

125.61 (A)(2)(a)(2) A Local Street may not intersect an Arterial unless unavoidable in which case the Local Street may intersect an Arterial but only if aligned with and extending an existing Local Street which intersects the Arterial or at a minimum distance of 660 feet from any other intersection of the Arterial, except at a minimum distance of 760 feet from the intersection of two Arterials.

125.61 (A)(2)(a)(3) A collector may intersect another collector but only if aligned with and extending an existing collector or at a minimum distance of 660 feet from any other intersection of the collector.

125.61 (A)(2)(a)(4) A Local Street may intersect a collector if spaced at a minimum distance of 660 feet from any other intersection or, in the case of a T-type intersection, at a minimum distance of 330 feet from any other intersection.

125.61 (A)(2)(a)(5) The minimum spacing requirements of this subchapter may be reduced upon a finding by the City that, given the particular conditions of the proposed Development, such reduction will not compromise operational and safety standards.

125.61 (A)(2)(b) Single-Family residential Lots smaller than one acre shall not have direct access to four-lane collector Streets. If the sides of adjoining residential Lots abut the collector Street, with the house and driveway facing the Local Street, the spacing between intersections shall be not less than 250 feet, and a Nonvehicular Access Line shall be provided along the collector Street. When the back of residential Lots abuts a collector Street a Nonvehicular Access Line shall be provided along the collector Street. Group parking facilities, as for multi-family Use, when located along a collector residential Street, shall be served by driveways having a minimum spacing of 250 feet.

125.61 (A)(3) ***Local residential Street.*** The primary function of the Local Street is to provide the access of vehicles to Single-Family residential Development fronting on the Street. Local Streets shall provide access to Single-Family residential Development and connect local Traffic from private driveways to collector Streets. Local Streets are required

when connections of driveways or private Streets to the collector would be otherwise closer than 250 feet.

125.61 (A)(3)(a) There shall be a minimum distance of 250 feet between the intersection of any two Local Streets with a single collector, except that there may be a minimum distance of 125 feet between "T" intersections.

125.61 (A)(3)(b) Local Streets shall be patterned in such a way that continuous Traffic from one collector to another collector is not possible.

125.61 (A)(3)(c) Dead end Streets shall be designed and constructed with a paved turnaround at the closed end pursuant to the requirements of the Building Code. Adequate easements or Rights-Of-Way shall be provided for Construction of the paved surface, Roadway drainage, and Sidewalks adjacent to the turnaround.

125.61 (A)(3)(d) A loop Street, a Local Street that begins and ends at the same collector, shall be subject to the following requirements:

125.61 (A)(3)(d)(1) A loop Street may be designed with a right angle corner serving as a Cul-De-Sac providing that a recessed circular pavement at such corner allowing greater Frontage for irregularly shaped Lots is provided.

125.61 (A)(3)(d)(2) A loop Street may begin at a collector and end at a Local Street provided that the system does not exceed the maximum number of trips permitted.

125.61 (B) ***Commercial Development.***

125.61 (B)(1) ***Commercial Streets.*** Commercial Streets shall be designed to facilitate the efficient and safe movement of vehicles from the Trafficways to regional commercial facilities, and from collectors and local residential Streets to community and neighborhood commercial Development. The design of commercial Streets shall comply with the standards of Table 7.

125.61 (B)(2) ***Pedestrian access.*** Neighborhood and community commercial facilities shall have an efficient and direct pedestrianway connection to the Residential Areas the facilities are intended to serve. The design of local commercial facilities shall allow pedestrian and bike riders direct access from adjacent neighborhood areas, with due consideration to the elimination of points of conflict between pedestrians and vehicles.

125.61 (C) ***Industrial Development.*** Industrial Development shall be designed to provide easy and safe access for incoming goods and services, and for the personnel operating the industrial facilities. Adequate location and size shall ensure that noise levels, smells and odors, vibration, radiation, and other sources of nuisance will not affect residential Development. Industrial Streets shall be designed to provide direct access from Arterials and collectors to industrial Local Streets. Local residential Streets shall not be used to provide access to immediately adjacent industrial Development. Industrial Streets shall comply with the standards of Table 7.

TABLE 7: DESIGN CRITERIA FOR STREETS FOR COMMERCIAL AND INDUSTRIAL DEVELOPMENTS				
Collector (Nontrafficway)			**Local Streets**	
Collector	**Four-lane collector**	**Two-lane local**	**Local**	**Cul de sac**
Typical Volume	6,500- 20,400 vpd	3,000- 8,500 vpd	500- 4,000 vpd	0-1,000 vpd (a)
Residential Access	Limited (b)	Limited (b)	Yes	Yes
Design Speed	45 mph	40 mph	35 mph	30 mph
Typical Space Between Streets*	½ mile	¼ mile	660 feet	330 ft.
Intersection Space Maximum	1 mile	½ mile	½ mile	660 ft.
Intersection Space Minimum	660 ft.	660 ft.	330 ft.	330 ft.
Lanes	4	2	2	2
Minimum Pavement	52 ft. (f)	28 ft. (f)	24 ft.	24 ft.
Pavement Mark/Signing	Yes (d)	Yes (d)	Yes (d)	Yes (d)
Driveway Design	Ramp/Street (e)	Ramp/Street (e)	Ramp/Street (e)	Ramp/Street (e)
Parking - On Street	Prohibited	Prohibited	Prohibited	Prohibited
Median	Yes	No	No	No
*Turn Lanes	Yes	Yes	No	No

TABLE 7: DESIGN CRITERIA FOR STREETS FOR COMMERCIAL AND INDUSTRIAL DEVELOPMENTS				
Collector (Nontrafficway)			**Local Streets**	
Collector	**Four-lane collector**	**Two-lane local**	**Local**	**Cul de sac**
Traffic Signal	As Warranted	As Warranted	As Warranted	No
Pedestrian Crossing	Intersection Only (d)	Intersection Only (d)	Intersection Only (d)	Intersection Only (d)
*Building Setback	10 foot min.	5 foot min.	5 foot min.	5 foot min.
*Approach Widening (Intersection Improvement)	Yes	Yes	No	No
*ROW	80 ft.	60-80 ft.	60 ft.	60 ft.Design Vehicle (Geom)WB-60 & SUWB-60 & SUWB 60 & SUWB 60 & SU
Corners (ROW)	30 ft. chord	30 ft. chord	25 ft. chord (e)	25 ft. chord
*Bikeways	Yes	Yes	No	No
*Sidewalks	Yes	Yes	Yes	Yes
Curbing Along Intersection Radii	Yes	Yes	Yes	Yes

* Further explanation in provisions of §§ 125.50-125.65.
(a) Cul-De-Sacs may be approved for Traffic volumes more than 1,000 vpd if an alternate is approved by the City Manager.
(b) As permitted in §125.54 (B)(2).
(c) Or 165 ft. for opposing offset "T" intersections.
(d) As delineated in the Manual on Uniform Traffic Control Devices (MUTCD).
(e) Or alternate approved by the City Manager.
(f) The outermost lanes shall be two feet wider than the interior lanes if Right-Of-Way is available.

§ 125.62 PERVIOUS AREA AND GREENSPACE.

125.62 (A) The area covered by Structures and impervious surface shall not exceed 75% for industrial, 70% for commercial, and 60% for residential Uses. For the purposes of this requirement all other Uses, such as, but not limited to, utilities, transportation, and office parks, shall be included in the commercial category. In mixed Use Developments the most restrictive of the applicable Impervious Area limitations shall be utilized.

125.62 (A)(1) Pervious Areas may be used to satisfy requirements for landscaping and setbacks, buffer strips, drain fields, passive recreation areas, or any other purpose that does not require covering with a material that prevents infiltration of water into the ground.

125.62 (A)(2) In the case of the use of an impervious material that does not cover all the surface to which it is applied, credit towards the computation of the Pervious Area shall be given according to the percentage of Pervious Area that is retained.

125.62 (A)(2)(a) Pervious paving blocks or turf blocks may not be used within Major Driveways, loading zones, actively used Parking Stalls in commercial or industrial Developments, or any other area that may cause a liability to the property Owner.

125.62 (A)(2)(b) Pervious paving blocks may be used in overflow parking areas, park and recreation parking facilities, and Reservoir Area. In all cases where the pervious paving blocks are used where pedestrian Traffic is prevalent, the block voids shall be planted with a nonrunner species of grass such as, but not limited to, zoysia and bermuda grass.

125.62 (B) Each proposed Development shall include provisions for the application of best management practices to enhance Retention Areas such as grass ponds, grass Swales, french drains, or combinations thereof, and shall meet all requirements of the applicable 208 Areawide Wastewater Treatment Management Plan.

125.62 (C) Where one or more of the nine Ecological Communities listed in Appendix 17-1 of the Broward County Comprehensive Plan are present within a proposed Development, (except in jurisdictional Wetlands as determined by Broward County), a minimum of 50% of the Pervious Area required by this subsection shall consist of these Ecological Communities in preservation areas.

§ 125.63 ARCHAEOLOGICALLY SIGNIFICANT LANDS.

Proposed site plans that include any land designated as an Archaeological Site in the City's Comprehensive Plan or in the Florida Site File, or designated as an Archaeological Cultural Resource Site shall include requirements for management of the Archaeological Site. Those requirements shall be based upon an archaeological report prepared by a professional archaeologist and submitted by the Applicant prior to site plan application. The report shall include a brief history of the area, the field survey methods, the results of the field survey, an assessment of the archaeological significance, and a proposed plan for management. The requirements for

management shall be approved by the City Manager after consultation with any other agencies deemed appropriate. It shall be the purpose of the management plan to provide for protection and preservation of the site to the extent feasible and to allow salvage Excavation only where other methods of preservation would not permit reasonable Development of the site.

§ 125.64 SIDEWALKS.

125.64 (A) ***Generally.*** Sidewalks having a minimum width of 5 feet shall be constructed adjacent to all developed properties and shall be located within the abutting Public and Private road Rights-Of-Way, except for properties abutting State Road 84, US 27 and Interstate 75 or in residential developments where the minimum lot size is greater than 2.5 acres.

125.64 (B) ***Trafficways.*** A minimum five-foot wide Sidewalk shall be constructed on both sides of all Trafficways, except expressways and limited access Highways.

125.64 (C) ***Sidewalk Construction.*** All Sidewalks shall be constructed in accordance with the City of Weston Engineering Standards, the Minimum Construction Standards Applicable to Public Rights-Of-Way under Broward County Jurisdiction (in the case of Trafficway Roadways), and applicable FDOT Standard Indexes. Sidewalks shall be concrete and separated from the road surface by a curb or Swale. At intersections, midblock crossings, bus stops, and bus bays, and bus shelters, Sidewalk connections to the road surface or drop curb ramps shall be constructed to provide accessibility to disabled persons. In accordance with the Florida Accessibility Code for New Building Construction, at least one accessible route from one-site Buildings to the external public Sidewalk system must be provided. Sidewalks shall not be constructed within Utility easements where existing or future Utility Poles, service boxes, or other obstructions will reduce the width of the Sidewalk below five feet, or as mandated for accessibility by the Americans with Disabilities Act.

125.64 (D) ***Pedestrian barriers.*** The City Manager may require that a site plan indicate fences, Hedges, berms, other landscaping, or other barriers on site plans, in order to discourage pedestrians from crossing hazardous Streets at unsafe points or at numerous points. When possible, sites shall be designed so as to promote pedestrian Street crossings only at Traffic Control signals, crosswalks, or intersections.

§ 125.65 OUTPARCEL AND MULTI-TENANT PROPERTIES.

125.65 (A) ***Outparcels.***

125.65 (A)(1) ***Generally.*** The establishment of commercial Outparcel tracts to serve as freestanding Structures may be permitted when the Outparcel Structure complements and serves to better define the principal commercial Development. To provide for their appropriateness, site standards are identified for Outparcel Development. The objectives of these standards are as follows.

125.65 (A)(1)(a) To assure the principal Developments are not visually obscured by Outparcel Developments;

125.65 (A)(1)(b) To maintain architectural continuity with the principal design features of surrounding Buildings and signage;

125.65 (A)(1)(c) To encourage complementary amenities;

125.65 (A)(1)(d) To embellish the adjacent Public Right-Of-Way with landscaping and other pedestrian features;

125.65 (A)(1)(e) To provide convenient and safe pedestrian connection with the principal Development Structures;

125.65 (A)(1)(f) To provide an On-Site parking and circulation system that can sufficiently serve the Outparcel; and

125.65 (A)(1)(g) To permit restrained signage in the form of monument or Building signage to occur.

125.65 (A)(2) ***Standards.***

125.65 (A)(2)(a) ***Architectural design and signage.*** The design and Construction of all Structures and signs on Outparcels shall be maintained so as to be compatible with the architectural format and signs of the principal Buildings comprising the Development. Colors, materials, finishes, and Building forms and signs shall be coordinated with the Owner and the City so they are identical with the overall center.

125.65 (A)(2)(b) ***Number of Outparcels.*** The number of Outparcels permitted on any commercial tract shall be no more than one Outparcel for every ten acres of total site area. Likewise, there shall be no less than 500 lineal feet of Street Frontage per Outparcel.

125.65 (A)(2)(c) ***Distance between Outparcels.*** There shall be a minimum of 300 lineal feet of open space between Outparcels except on adjacent properties where there may be 300 lineal feet between Buildings when separated by a Roadway.

125.65 (A)(2)(d) ***Distance between principal and Outparcel Structures.*** There shall be a minimum distance separation of 150 feet from the Principal Structure to any Outparcel Structure.

125.65 (A)(2)(e) ***Number of Buildings on Outparcel.*** No more than one Building may be permitted on each approved Outparcel containing no more than 15,000 square feet.

125.65 (A)(2)(f) ***Height.*** Height shall be scaled to surrounding areas; however, not to exceed one Story with a maximum Height of 18 feet as measured from the crown of the road.

125.65 (A)(2)(g) ***Access.*** Access to the Outparcel shall be as direct as possible avoiding excessive movement across Parking Aisles and queuing across surrounding parking and driving aisles. All access to the Outparcel must be internalized utilizing the main access drive of the principal retail center. Storage and service facilities for all Outparcels shall be integrated within the Building zone and preferably constructed as an integral part of the Structure. Drive-Through facilities shall be provided on the Outparcel site exclusively. In no instance shall the circulation and access of the principal commercial facility and its parking and service be impaired.

125.65 (B) ***Multi-tenant properties.*** Multi-tenant projects may be permitted when multiple Buildings are included as part of a single site plan. To provide for their appropriate Development, the following site standards are identified for the Development of multi-tenant properties.

125.65 (B)(1) All Buildings within the site plan shall be identical in architecture, style, and color.

125.65 (B)(2) Convenient and safe pedestrian connection between the various Buildings must be provided.

125.65 (B)(3) An On-Site parking and circulation system that can sufficiently serve the project must be provided.

CHAPTER 126. SIGNS.

§ 126.01 SCOPE, PURPOSE, SUBSTITUTION AND SEVERABILITY.

126.01 (A) ***Scope.*** The provisions of this Chapter shall govern the number, size, location, and character of all Signs which may be permitted either as a main or accessory use under the terms of this Chapter. No Signs shall be permitted on a plot or parcel either as a main or accessory use except in accordance with the provisions of this Chapter.

126.01 (B) ***Purpose.*** It shall be the purpose of this Chapter to promote the aesthetics, safety, health, and general welfare and the assurance of protection of adequate light and air within the City by regulation of the general posting, displaying, erection, use, and maintenance of Signs. In the event of any conflict between this Code and any declaration of covenants, bylaws, or other restrictions applying to any property within the City, the language affording the more restrictive interpretation shall apply.

126.01 (C) ***Substitution of noncommercial speech for commercial speech.*** Notwithstanding any provisions of this Chapter to the contrary, to the extent that this Chapter permits a Sign containing commercial content, it shall permit a Noncommercial Sign to the same extent. The noncommercial message may occupy the entire Sign Area or any portion thereof, and may substitute for or be combined with the commercial message. The Sign message may be changed from commercial to noncommercial, or from one noncommercial message to another, as frequently as desired by the Sign's owner, provided that the Sign is not prohibited and the Sign continues to comply with all requirements of this Chapter.

126.01 (D) ***Severability.***

126.01 (D)(1) ***Generally.*** If any part, Section, subsection, paragraph, subparagraph, sentence, phrase, clause, term, or word of this Chapter is declared unconstitutional by the final and valid judgment or decree of any court of competent jurisdiction, this declaration of unconstitutionality or invalidity shall not affect any other part, section, subsection, paragraph, subparagraph, sentence, phrase, clause, term, or word of this Chapter.

126.01 (D)(2) ***Severability where less speech results.*** This subsection shall not be interpreted to limit the effect of subsection (1) above, or any other applicable severability provisions in the code of ordinances or any adopting ordinance. The City Commission specifically intends that severability shall be applied to these Sign regulations even if the result would be to allow less speech in the City, whether by subjecting currently exempt Signs to permitting or by some other means.

126.01 (D)(3) ***Severability of provisions pertaining to prohibited Signs.*** This subsection shall not be interpreted to limit the effect of subsection (1) above, or any other applicable severability provisions in the code of ordinances or any adopting ordinance. The City Commission specifically intends that severability shall be applied to § 126.10 "Prohibited Signs," so that each of the prohibited Sign types listed in that Section shall continue to be prohibited irrespective of whether another Sign prohibition is declared unconstitutional or invalid.

126.01 (D)(4) ***Severability of prohibition on Off-Premises Signs.*** This subsection shall not be interpreted to limit the effect of subsection (1) above, or any other applicable severability provisions in the code of ordinances or any adopting ordinance. If any or all of Chapter 126 "Signs," or any other provision of the City Code is declared unconstitutional or invalid by the final and valid judgment of any court of competent jurisdiction, the City Commission specifically intends that the declaration shall not affect the prohibition on Off-Premises Signs in § 126.10(B)(18).

§ 126.02 SIGN PERMITS.

126.02 (A) ***Permit required***. Except as provided in this Section, no permanent or Temporary Sign shall be erected, constructed, posted, painted, altered, maintained, or relocated until a permit has been issued by the City.

126.02 (B) ***Application procedure***. Before any permit is issued, a written application, in the form provided by the City, shall be filed, together with such drawings and specifications as may be necessary to fully advise the City with the location, construction, materials, manner of illuminating, method of securing or fastening, the number of Signs applied for, the consent of the property owner, and the wording of the sign. Upon the submission of an application, the City shall have ten days to determine whether it is complete. If the City finds that the application is not complete, the City shall provide the applicant with written notice of the deficiencies within the ten-day period. Upon resubmission of the application, the City shall have five additional days to determine whether the applicant's revisions are sufficient to complete the application. If they are not, the City will again inform the applicant of any remaining deficiencies in writing. This process shall continue until the applicant has submitted a complete application, or demands that the application be reviewed "as is."

126.02 (C) ***Code requirements***. All Signs shall be constructed in accordance with the Building Code, including obtaining all required permits. No Sign shall be approved for use unless it has been inspected and found to be in compliance with all the requirements of this Chapter and applicable codes.

126.02 *(D)* ***Application review***. The City shall approve or deny the Sign permit based on whether it complies with the requirements of this Chapter. The City shall approve or deny the S permit within 30 days after receipt of a complete application. If denied, the City shall prepare a written notice of its decision, describing the applicant's appeal rights, and send it by certified mail, return receipt requested, to the applicant. The applicant may file a written notice of appeal to the City Commission within 30 days after the date of receipt of the City's written notice. The City Commission shall hold a public hearing at the next available Commission meeting that is at least 25 days after the date of receiving the written notice of appeal, at which the City Commission shall determine whether the application satisfies all Code requirements. If the City Commission does not approve the application, then the applicant may seek relief in the Circuit Court for Broward County, as provided by law.

126.02 (E) ***Failure to commence.*** Each Sign permit issued by the City shall become null and void, if installation is not commenced within 90 days from the issuance date of such permit. If no work authorized by such permit takes place for any continuous 90 day period any

time after the work has commenced, a new Sign permit shall be required prior to resuming the work, and the fee will be the full amount required for a new permit for such work.

126.02 (F) ***Signs exempt from permitting requirement.*** The following Signs may be erected or constructed without a Sign permit when in accordance with the Building Code and this Chapter:

126.02 (F)(1) Official traffic, governmental information, and provisional warning Signs or Sign Structures, when erected or required to be erected by a governmental agency.

126.02 (F)(2) Temporary Signs indicating danger or warning of a hazardous physical condition to pedestrians, bicyclists and motorists.

126.02 (F)(3) Changing of the content on a bulletin board, poster board, display encasement or marquee.

126.02 (F)(4) Election Signs.

126.01 (F)(5) Real Estate Sales Signs and Real Estate Leasing Signs.

126.02 (F)(6) Any Sign located within a building, lobby or courtyard and not visible from off site. However, such Signs are not exempt from the structural electrical or material specifications as set forth in this Code and the City's adopted Building Code.

126.02 (F)(7) Flags, whether displayed on poles or in another fashion. Installation of a permanent flag pole or other permanent mounting device shall require a building permit. If the flag pole or device is located on property zoned for other than single family residential uses, the location of the flag pole or device must be shown on the site plan for the property. See § 126.12 for display standards.

126.02 (F)(8) Seasonal decorations in residential areas in compliance with § 126.18(C).

126.02 (F)(9) To the extent that this subsection allows a Sign displaying commercial content to be exempt from permitting, it shall allow a Sign with the same size, length of display, appearance, location, display area, and other physical characteristics to be exempt from permitting if it displays noncommercial content.

DESIGN AND PERFORMANCE STANDARDS

§ 126.10 PROHIBITED SIGNS.

126.10 (A) ***Prohibited Signs by location***. Unless otherwise authorized, the following Signs shall be prohibited:

126.10 (A)(1) Roof Signs;

126.10 (A)(2) Signs that extend above the parapet or roof of a building;

126.10 (A)(3) Signs that obstruct the view of a public safety or directional sign, or traffic-control device;

126.10 (A)(4) Signs that obstruct any window, door, fire escape, stairway, or opening intended to provide light, air, ingress, or egress for any building that would cause a violation of the Building Code;

126.10 (A)(5) Signs on benches and freestanding shelters;

126.10 (A)(6) Any vehicle Sign affixed to a vehicle that can be viewed from a Public Right-Of-Way and remains stationary for a period in excess of 24 hours, excluding weekends and holidays; and

126.10 (A)(7) Signs that are towed behind a vehicle.

126.10 (A)(8) Signs located on a fence.

126.10 (B) ***Prohibited Signs by type.*** Unless otherwise authorized, the following Signs shall be prohibited:

126.10 (B)(1) Signs that do not comply with the provisions of this Chapter;

126.10 (B)(2) Pole Signs;

126.10 (B)(3) Signs on lots without a principal use;

126.10 (B)(4) Fixed Projecting Signs;

126.10 (B)(5) Any Projected Sign;

126.10 (B)(6) Signs that may be confused with a public safety or Directional Sign, or traffic control device;

126.10 (B)(7) Animated Signs;

126.10 (B)(8) Signs that emit a sound, odor, or visible matter such as smoke or vapor;

126.10 (B)(9) Snipe Signs;

126.10 (B)(10) Obsolete Signs, Abandoned Signs, or dilapidated Signs;

126.10 (B)(11) Signs that are portable or unattached to a building or the ground;

126.10 (B)(12) Signs that are inflatable;

126.10 (B)(13) Signs that contain a visible light source;

126.10 (B)(14) Signs containing exposed neon or exposed light emitting diodes (LED);

126.10 (B)(15) Externally illuminated Signs where lighting is not recessed in the ground;

126.10 (B)(16) Signs with an internally illuminated cabinet;

126.10 (B)(17) Channel lettering or Logos with internally illuminated face;

126.10 (B)(18) Off-premises Signs, except that any lawfully erected Off-premises Sign that existed on January 1, 2001 shall be treated as a non-conforming structure and use;

126.10 (B)(19) Any Sign, other than gas station price Signs, containing changeable content; and

126.10 (B)(20) Banner Signs located on a residentially zoned property.

126.10 (B)(21) Painted Signs.

§ 126.11 PERMANENT SIGNS.

126.11 (A) ***Residential uses.*** The following standards apply to all permanent Signs on residential lots and uses.

RESIDENTIAL USE/STRUCTURE TYPE	SIGN TYPE	MAXIMUM NUMBER	MAXIMUM AREA (sq. ft.)	MAXIMUM HEIGHT (ft.)
Multi-family complex other group living	Monument and/or Building mounted	Two per street frontage	32 (Monument) 16 (Building mounted)	6 (Monument)
Subdivisions, Planned developments	Monument	Two per street frontage	32	6

126.11 (B) ***Non-residential uses.*** The following standards apply to all permanent Signs on the site of non-residential uses.

TYPE OF USE	WALL SIGNS	MONUMENT SIGNS	DIRECTORY SIGNS	DIRECTIONAL SIGNS
OFFICE, INDUSTRIAL, INSTITUTIONAL	max. no.: 1 per wall face, or 2 for walls over 80 ft. in length (not to exceed 6 for building) max. area: 10% of wall face or 80 sq. ft., whichever is less max. height: n/a	max. no.: 1 max. area: 36 sq. ft. max. height: 6 ft.	max. no.: 1 per building max. area: 18 sq. ft. max. height: 3 ft.	max. no.: 1 per vehicular access point max. area: 6 sq. ft. max. height: 3 ft.
FREESTANDING COMMERCIAL	max. no.: 1 max. area: 8% of wall face or 40 sq. ft., whichever is less max. height: n/a	max. no.: 1 per parcel (for parcels over 1.5 acres, 1 Sign per street frontage) max. area: 36 sq. ft. max. height: 6 ft.	max. no.: 1 per building max. area: 18 sq. ft. max. height: 3 ft.	max. no.: 1 per vehicular access point max. area: 6 sq. ft. max. height: 3 ft.
RETAIL SHOPPING CENTER, ONE STORY OFFICE-INDUSTRIAL WITH EXTERIOR ACCESS	max. no.: 1 per first floor store front max. area: 50% of length of storefront, not to exceed 20 ft. max height: 18 in.	max. no.: 1 per street frontage for retail, 1 per parcel for office-industrial max. area: 36 sq. ft. max. height: 6 ft.	max. no.: 1 per building max. area: 18 sq. ft. max. height: 3 ft.	max. no.: 1 per vehicular access point max. area: 6 sq. ft. max. height: 3 ft.
MIXED USE (RETAIL AND OFFICE COMBINED)	max. no.: 2 wall Signs identifying the name of the center or tenants shall be permitted on the top of the building, consistent with § 126.20; in addition, ground floor retail stores or offices will be allowed one Sign per tenant max. area: Signs above first floor, 10% of wall face or 80 sq. ft., whichever is smaller, no Sign may exceed 50% of the lineal building	max. no.: 1 max. area: 36 sq. ft. max. height: 6 ft.	max. no. 1 per building max. area: 18 sq. ft. max. height: 3 ft.	max. no.: 1 per vehicular access point max. area: 6 sq. ft. max. height: 3 ft.

TYPE OF USE	WALL SIGNS	MONUMENT SIGNS	DIRECTORY SIGNS	DIRECTIONAL SIGNS
	frontage; first floor signage consistent with retail signage provisions above and §126.11(C) max. height: n/a			

126.11 (C) ***Uniform Sign plan.*** All Signs in multi-tenant projects shall be subject to a uniform Sign plan, available for inspection at the City Clerk's Office, and shall comply with the following:

126.11 (C)(1) All Signs mounted to a building shall be uniform in terms of illumination, material, fabrication and Sign Area.

126.11 (C)(2) All lettering on Signs shall be comprised of not more than one font style except for registered stylized trade or service marks.

126.11 (C)(3) The Sign plan shall be limited to no more than one color that is consistent with the surrounding architectural standards.

126.11 (D) ***Permanent Real Estate Leasing Signs.*** A permanent Real Estate Leasing Sign shall only be permitted if it is on a Monument Sign subject to the following requirements:

126.11 (D)(1) Only one such Sign shall be allowed per Monument Sign;

126.11 (D)(2) Such Signs on residential or non-residential lots shall not exceed two square feet in area; and

126.11 (D)(3) Such Signs shall only identify the name and telephone number of the property manager, property owner, broker, or leasing agent.

126.11 (E) ***Automated teller machines (ATM).*** ATMs may only have the name of the banking institution up to one square foot and other instructional information up to one square foot.

126.11 (F) ***Noncommercial political Signs.***

126.11 (F)(1) In single family and MF1 residential districts, two noncommercial political Signs per issue per candidate per lot may be erected on a property. The maximum Sign Area shall be two square feet and maximum height shall be four feet.

126.11 (F)(2) In nonresidential and MF2 and MF3 residential districts, one noncommercial Sign per issue per candidate per lot may be erected. The maximum Sign Area shall be 16 square feet and maximum height shall be six feet.

126.11 (G) ***Menu Signs.*** Only one Menu Sign shall be permitted per restaurant, which:

126.11 (G)(1) Shall be no larger than 12 square feet;

126.11 (G)(2) Shall be kept in good condition;

126.11 (G)(3) Shall be located within five feet of a restaurant's main entrance; and

126.11 (G)(4) May incorporate backdrop night lighting that is integrated within the Menu Sign and is shielded to reduce glare.

126.11 (H) ***Noncommerical Informational Signs***. Only one noncommercial informational Sign per Homeowners' Association gatehouse shall be permitted, subject to the following provisions:

126.11 (H)(1) Shall be no larger than 16 square feet;

126.11 (H)(2) Shall be kept in good condition;

126.11 (H)(3) Shall be affixed to the Homeowners' Association gatehouse(s); and

126.11 (H)(4) May incorporate exposed light emitting diodes (LED) and have a changeable copy.

§ 126.12 FLAG DISPLAY STANDARDS.

126.12 (A) ***Maximum height***. Except as otherwise provided herein, Flags shall be displayed on flag poles. Such poles in nonresidential zoning districts shall not exceed the allowed height of the zoning district or 70 feet, whichever is less. Flagpoles may not be placed on top of buildings or light poles. Flagpoles in residential districts shall not exceed 25 feet.

126.12 (B) ***Maximum number and size.***

126.12 (B)(1) The maximum dimensions of any Flag shall be proportional to the Flag pole height. The hoist side of the Flag shall not exceed 20% of the vertical height of the pole. In addition, Flags are subject to the following dimensional limitations:

Pole Height	Maximum Flag Size
Up to 25 feet	24 total square feet
25 to 39 feet	40 total square feet
40 to 49 feet	60 total square feet
50 to 59 feet	96 total square feet
60 to 69 feet	150 total square feet

Pole Height	Maximum Flag Size
70 feet	216 total square feet

126.12 (B)(2) Each property shall be allowed a maximum of three Flag poles. A maximum of two Flags shall be allowed per flag pole. References to flagpole height in this subsection refer to vertical flagpoles. References to the number of Flags and Flag poles and Flag dimensions refer to both vertical flagpoles and mast-arm flagpoles (for example, staffs extending at an angle from a building).

126.12 (C) ***Flags on permanent fixtures other than poles***. Flags that are attached to the side of a Structure without a pole shall not, individually or cumulatively, cover more than the greater of 24 square feet or 20% of the facade of the structure on which the Flag is mounted. One Flag is permitted on up to two building facades.

126.12 (D) ***Setback***. A vertical Flag pole must be set back from all property boundaries a distance that is at least equal to the height of the pole.

126.12 (E) ***Condition of Flag and pole or other permanent mounting.*** The Flag and Flag pole or other permanent mounting shall be maintained in good repair. Flag poles with broken halyards shall not be used, and torn or frayed Flags shall not be displayed.

§ 126.13 WINDOW SIGNS.

A Window Sign that identifies the business or activity on the premises by name or symbol is permitted, subject to the following provisions:

126.13 (A) ***Office/Industrial***. The Signs shall not exceed an aggregate area equal to 5% of the window glass area on which they are located. Such signage is limited to the name of the business and its suite number or address, and shall be uniform within a multi-tenant center.

126.13 (B) ***Retail.*** The Signs shall not exceed an aggregate area equal to 20% of the window glass area on which they are located.

§ 126.14 BUILDING AND UNIT NUMBER SIGNS.

126.14 (A) ***Single-family and Townhomes number Signs.***

126.14 (A)(1) House number Signs for single-family homes shall be at least three inches in height and shall be either:

126.14 (A)(1)(a) Attached to that portion of the Structure facing the street on which the property is addressed so that there is an unobstructed view of the house numbers, or

126.14 (A)(1)(b) Located on the mailbox facing the street on which the property is addressed.

126.14 (A)(2) House number Signs for townhomes shall comply with subsection (A)(1) above, provided that each unit has a separate address or unit number.

126.14 (B) ***Multi-family and Non-residential number Signs.*** Number Signs denoting the address for multi-family buildings and non-residential properties shall have address Signs four inches in height, and the unit number for each such unit within the building shall be two inches in height.

126.14 (C) ***Additional Non-residential Signage.*** All non-residential rear or service doors, and public entrances shall have the street number located on the door, four inches in height, and the name of the establishment, two inches in height, placed no less than five feet from the bottom of the door.

§ 126.15 STREET IDENTIFICATION (NAME) SIGNS.

Street identification Signs shall be installed prior to the issuance of the first building permit within any Development.

§ 126.16 DIRECTIONAL SIGNS.

Directional Signs shall only display directional information and Logos.

§ 126.17 HANGING SIGNS.

126.17 (A) Hanging Signs shall only be permitted to the extent allowed under the applicable approved uniform Sign plan.

126.17 (B) The only text permitted on a Hanging Sign shall be one of the following:

126.17 (B)(1) The business' trade name;

126.17 (B)(2) The franchise name; or

126.17 (B)(3) The primary product or service.

§ 126.18 TEMPORARY SIGNS AND DECORATIONS.

126.18 (A) ***Real Estate Sale and Real Estate Leasing Signs.***

	Residential District	**Nonresidential District**
Permit Required	No	No
Maximum Number	One Sign per building or parcel	One Sign per building or parcel
Maximum Sign Area	Two square feet	Two square feet
Maximum Height	Five feet	Five feet

	Residential District	Nonresidential District
Maximum Duration of Display	Signs shall not be erected until the property is offered for sale, rent, or lease, and shall be removed within three days of closing or the signing of a lease agreement.	Signs shall not be erected until the property is offered for sale, rent, or lease, and shall be removed within three days of closing or the signing of a lease agreement.
Other restrictions	Such Signs shall only identify the name and telephone number of the property manager, property owner, broker or leasing agent. In retail shopping centers where a permanent Real Estate Leasing Sign does not exist, a temporary Real Estate Leasing Sign may only be placed in the window of the ground floor premises that is being offered for lease.	Such Signs shall only identify the name and telephone number of the property manager, property owner, broker or leasing agent. In retail shopping centers where a permanent Real Estate Leasing Sign does not exist, a temporary Real Estate Leasing Sign may only be placed in the window of the ground floor premises that is being offered for lease.

126.18 (B) ***Construction Signs.***

Regulations	Residential District	Nonresidential District
Permit Required	No	No
Maximum Number	One Free standing Sign per construction site	One Free standing Sign per construction site
Maximum Sign Area	16 square feet	16 square feet
Maximum Height	Six feet	Six feet
Maximum Duration of Display for Freestanding Signs	Free standing Signs shall not be erected prior to the issuance of a building permit for the project, and shall be removed within three days after the date of the issuance of a certificate of occupancy or certificate of completion, whichever occurs first.	Shall not be erected prior to the issuance of a building permit for the project, and shall be removed within three days after the date of the issuance of a certificate of occupancy or certificate of completion, whichever occurs first.
Maximum Duration of Display for Signs on Trailers or Temporary Storage Facilities	Signs on trailers or temporary storage facilities located at construction sites are only permitted while a building or engineering permit is in effect for that site	Signs on trailers or temporary storage facilities located at construction sites are only permitted while a building or engineering permit is in effect for that site.

Regulations	Residential District	Nonresidential District
Other restrictions	Signs shall only identify the name of the project under construction, a contact telephone number and/or the street address of the property	Signs shall only identify the name of the project under construction, a contact telephone number and/or the street address of the property.

126.18 (C) ***Nonresidential seasonal decorations.***

Regulations	Nonresidential Districts
Noise	Seasonal decorations that make noise, sound, or music are prohibited.
Lighting	Seasonal decorations that have flashing or blinking lights are prohibited. Lights are limited to 2.5 volts per bulb.
Message	Seasonal decorations shall not include commercial messages.

126.18 (D) ***Election Signs.***

Regulations	Single Family and MF1 Residential Districts	Nonresidential and MF2 and MF3 Residential Districts
Permit Required	No	No
Maximum Number	Two Free standing Signs per candidate or issue per lot.	One Free standing Sign per candidate or issue per lot.
Maximum Sign Area	Two square feet	16 square feet
Maximum Height	Four feet	Six feet
Maximum Duration of Display	A Sign shall be erected no more than 90 days prior to the election and shall be removed no more than three days after the election.	A Sign shall be erected no more than 90 days prior to the election and shall be removed no more than three days after the election.
Other restrictions	Signs shall not be permitted in Public or Private Rights-Of-Way. The City has the authority to remove such advertisements, and may charge the candidate a fee, to be set by resolution of the City Commission for such removal.	Signs shall not be permitted in Public or Private Rights-Of-Way. The City has the authority to remove such advertisements, and may charge the candidate a fee, to be set by resolution of the City Commission for such removal. A Free standing Sign shall be located no closer than 500 feet from another Free standing Sign for the same candidate or issue.

126.18 (E) ***Special Event Signs***.

Regulations	Residential District	Nonresidential District
Permit Required	Yes, as required by Section 100.07.	Yes, as required by Section 100.07.
Maximum Number	No more than one Sign on any parcel.	No more than one Sign on any parcel.
Maximum Sign Area	Four square feet	16 square feet
Maximum Height	Four feet above grade	Six feet above grade
Length of display	Such Signs may be authorized by the City for periods of up to only 30 consecutive days in any 12 month period, and must be removed no later than three days after the special event or activity has ended.	Such Signs may be authorized by the City for periods of up to only 30 consecutive days in any 12 month period, and must be removed no later than three days after the special event or activity has ended.
Other restrictions		

126.18(F) ***Nonresidential Banner Signs***.

Regulations	Nonresidential District
Permit Required	Yes. The permit shall include a copy of the business tax receipt the business.
Maximum Number	One Sign per business
Maximum Sign Area	16 square feet
Maximum Height	Not to extend above the lowest point of the roof
Length of display	Such Signs may be authorized by the City for periods of up to only 30 consecutive days in any 12 month period, and must be removed no later than three days after the special event or activity has ended.

§ 126.19 ARCHITECTURAL EMBELLISHMENTS.

126.19 (A) ***Generally***. Architectural Embellishments added to a Structure for the purpose of conveying a message as to the purpose of the building, or to attract attention to the building, shall be treated as Signs, and must comply with § 126.02 and shall be subject to the standards set forth in § 126.11.

126.19 (B) ***Requirements.*** Architectural Embellishments shall comply with all relevant provisions of § 126.19, § 126.20and § 126.21as well as all other applicable provisions of the City's Land Development Chapter. All applications for approval of Architectural Embellishments shall meet the following requirements:

126.19 (B)(1) Architectural Embellishments shall be consistent with the design of the building and compatible with the building and surrounding structures.

126.19 (B)(2) No written messages, logos, arrows, flags, banners or bare bulbs shall be part of the Architectural Embellishment.

126.19 (B)(3) Architectural Embellishments shall be applied and constructed strictly in accordance with the site plan. Any deviation from the approved plan or rendering, in materials or style, will require removal of the Architectural Embellishment pursuant to §126.23.

126.19 (B)(4) The addition of Architectural Embellishments to an existing structure shall require an amendment to the existing site plan and shall be processed accordingly.

§ 126.20 SIGN PLACEMENT.

126.20 (A) ***Location.*** All signs and Sign Structures shall be located completely within the boundaries of the site on which the principal building is located.

126.20 (B) ***Setbacks.*** Freestanding Signs that are Permanent Signs may be placed in required setbacks, provided that no Sign shall be permitted within ten feet of any adjacent property line, within setbacks adjacent to residential lots, or within required corner site distance triangles. Non-residential free standing temporary Signs and Monument Signs shall be placed at least ten feet from the Right-Of-Way. Signs located in private easements shall require permission of the easement holder.

126.20 (C) ***No obstruction.***

126.20 (C)(1) *Obstruction to exits*. No Sign shall be erected, constructed or maintained so as to obstruct any fire escape, required exit, window or door opening used as a means of egress.

126.20 (C)(2) *Obstruction to ventilation*. No Sign shall be attached in any form, shape or manner that will interfere with any opening required for ventilation.

126.20 (D) ***Building Identity Signs.*** Signs attached or affixed to buildings shall comply with the following:

126.20 (D)(1) Such Signs shall be located at the top floor level of multi-story buildings, and must be placed so that they are centered generally between the top of the building parapet and the top of the highest window. When there are two Signs, they must be placed so that they are symmetrical.

126.20 (D)(2) Such Signs shall not project beyond the corner of a building.

126.20 (D)(3) Such Signs shall not project more than eight inches out from a building wall.

126.20 (D)(4) The wall area immediately behind the Sign must be the same color as the wall area surrounding the Sign.

126.20 (D)(5) The Sign lettering must be attached directly to the building wall with no intervening setoff other than mounting hardware.

126.20 (D)(6) The content of the Sign shall be limited to the name of the Building, the Owner of the Building (if located in the Building) or a Tenant located in the Building.

§ 126.21 SIGN DESIGN AND MAINTENANCE.

126.21 (A) ***Sign integration***. All Signs shall be designed as an integral part of the total Building or project.

126.21 (B) ***Colors.*** All Signs for a single-tenant Building shall contain no more than four different colors (including the background color) consistent with the surrounding architectural standards. White, black, and different shades of the same color shall be considered separate colors. Color samples must be submitted with any application for Sign review.

126.21 (C) ***Logos***. A logo(s) may be used in lieu of a permanent Sign or as a part of a permanent Sign subject to the following provisions:

126.21 (C)(1) *Logo(s) Used in Lieu of a Permanent Sign*. A logo(s), used in lieu of a permanent Sign, shall be subject to the permanent Sign regulations for maximum number, area, and height.

126.21 (C)(2) L*ogo(s) Used as a Part of a Permanent Sign*. The dimensions of a logo(s), used as a part of a permanent Sign, shall be counted towards and contained within the maximum area and height allowed for the permanent Sign.

126.21 (D) ***Reverse channel lettering***. Casing may be any approved color. Illumination shall be white.

126.21 (E) ***Materials***. Materials used for Monument Sign Structures shall be similar to the materials, color, and fabrication used in any wall signage on the principal Buildings on the site.

126.21 (F) ***Illumination.***

126.21 (F)(1) Within 1,000 feet of a lot containing a residential dwelling, no Sign shall be illuminated after 11:00 p.m. or the close of business, whichever occurs last. This provision shall not apply to residential Monument Signs.

126.21 (F)(2) Signs that are externally illuminated shall have a lighting fixture that is recessed in the ground. No portion of said fixture may be installed to remain above the surrounding grade.

126.21 (F)(3) Light sources used to illuminate signs shall not be visible from nearby Rights-Of-Way or properties.

126.21 (F)(4) Signs shall not be constructed of any light-reflective letters or materials.

126.21 (F)(5) No back lighting of Awning or Canopy Signs shall be allowed.

126.21 (F)(6) Signs that are illuminated shall utilize the most energy efficient means currently available.

126.21 (G) ***Maintenance.***

126.21 (G)(1) All Signs shall be maintained as originally permitted and constructed.

126.21 (G)(2) No person shall have any Sign that is in a dangerous or defective condition on any premises he or she owns or controls. Within ten days of receiving notice of lack of maintenance, all Signs shall be maintained in a safe presentable and good structural condition, including the replacement of defective parts, repainting, cleaning and other acts required for the maintenance of said Sign. If the Sign is not made to comply with the above standards, the City shall require its removal in accordance with § 126.23.

126.21 (G)(3) Except as otherwise provided in this Chapter, any on-premise Sign located on property that becomes vacant and unoccupied for a period of three weeks or more, or any Sign that pertains to a time, event or purpose which no longer applies, shall be deemed to have been abandoned. An Abandoned Sign is prohibited and shall be removed in accordance with § 126.23.

126.21 (H) ***Text***.

126.21 (H)(1) The only commercial text that shall be permitted on a Sign shall be one of the following.

126.21 (H)(1)(a) The business' trade name;

126.21 (H)(1)(b) The franchise name; or

126.21 (H)(1)(c) The primary product or service.

126.21 (H)(2) Pricing may be included in the text area of a Monument Sign, but not a wall sign, for motor fuels at service stations.

§ 126.22 SIGNS ON RIGHTS-OF-WAY AND PUBLIC PROPERTY.

126.22 (A) No Signs shall be allowed in the Public or Private Right-Of-Way, except:

126.22 (A)(1) Emergency warning signs erected by a governmental agency, public utility, or contractor authorized to work within the Right-Of-Way.

126.22 (A)(2) Public Signs erected by or on behalf of a governmental entity to post legal notices, identify Public Property, convey public information, and direct or regulate pedestrian or vehicular traffic.

126.22 (A)(3) Informational Signs of a public utility regarding its poles, lines, pipes, or other facilities.

126.22 (B) No Signs shall be allowed on Public Property, except:

126.22 (B)(1) Signs that are expressly allowed pursuant to a contract with the City in Public Parks.

126.22 (B)(2) Signs that are expressly allowed in a City-issued special event permit, and that relate to the event covered by the permit.

§ 126.23 NON-COMPLYING SIGNS.

Any Sign installed or placed on public property, except in conformance with the provisions of this Chapter, or any Sign or Sign Structure that does not comply with the requirements of this Chapter, shall be forfeited to the public and subject to confiscation. In addition to other remedies, the City shall have the right to recover from the Owner or Person responsible for the placement of the Sign the full costs of its removal and disposal.

§ 126.24 NONCONFORMING SIGNS.

126.24 (A) Signs or Sign Structures made nonconforming upon passage of this Chapter (originally on March 16, 1998), or on passage of any amendment thereto, shall be governed by the following regulations:

126.24 (A)(1) A Sign existing within the City, or an area subsequently annexed to the City, upon the passage of this Chapter or any amendment hereof which, because of its height, square foot area, location, or other characteristic, does not conform to this Chapter is hereby declared to be a nonconforming sign.

126.24 (A)(2) A nonconforming Sign under §126.11 (C) (uniform Sign plan) must be removed at any time that 50% or more of the Signs in the multi-tenant project are replaced.

126.24 (A)(3) A nonconforming Sign under § 126.10 (B)(17) (channel letter signs) may be retained (provided that both the Sign Face and illumination are white), until the sign requires more than 50% of the Sign lettering to be replaced. Nonconforming Signs under § 126.10 (B)(17) shall not be illuminated between the hours of 12:00 a.m. and 6:00 a.m.

126.24 (A)(4) In a multi-tenant project with nonconforming Signs that are permitted to remain pursuant to the provisions of this Section, all new Signs shall conform to this Chapter.

126.24 (B) The status afforded Signs under this Section shall not be applicable to any Sign for which no permit or Sign permit was ever issued; such Signs are deemed non-complying Signs and are subject to the provisions of this Chapter governing non-complying Signs.

126.24 (C) If any nonconforming Sign is damaged by any cause and either:

126.24 (C)(1) The cost of repairing the Sign equals 50% or more of the original invoiced cost of the Sign;

126.24 (C)(2) 50% or more of the Sign Area is damaged; or

126.24 (C)(3) 50% or more of the text is damaged

then its classification as a nonconforming Sign under this Section shall be automatically revoked and repairs shall be made so that the Sign shall meet all the requirements of this Chapter.

126.24 (D) ***Loss of nonconforming status.*** A nonconforming Sign shall immediately lose its nonconforming status if the Sign is replaced, abandoned, altered or relocated, and the Sign shall be immediately brought into compliance with this Chapter (with a new permit secured) or shall be removed.

126.24 (E) ***Nonconforming Sign maintenance and repair.*** Nothing in this Section shall relieve the owner or user of a nonconforming Sign, or the owner of the property on which the nonconforming Sign is located, from the provisions of this Chapter, regarding safety, maintenance and repair of Signs.

CHAPTER 127. ENGINEERING STANDARDS

§127.01 GLOSSARY OF ACRONYMS.

The use of acronyms in this Chapter 127 shall refer to the organizations as set forth below:

AASHTO – Association of American State Highway and Transportation Officials
ADA – Americans with Disabilities Act
ANSI – American National Standards Institute
ASTM – American Society for Testing and Materials
AWG – American Wire Gauge
AWWA – American Water Works Association
BCE – Broward County Engineering
BCHD - Broward County Health Department
BCTE – Broward County Traffic Engineering
BDD – Bonaventure Development District
DERD – Broward County Development and Environmental Regulation Division
DFT – Total Dry Film Thickness
DIP – Ductile Iron Pipe
DIPRA – Ductile Iron Pipe of the Cast Iron Pipe Research Association
FBC – Florida Building Code
FDEP – Florida Department of Environmental Protection
FDOT – Florida Department of Transportation
FPL – Florida Power and Light
IDF – Intensity Duration Frequency
ITDD – Indian Trace Development District
LBR – Lime rock Bearing Ratio
LED – Light Emitting Diode
MDFT – Minimum Total Dry Film Thickness
MILS – Millimeter
MUTCD – Manual of Uniform Traffic Control Devices
NPT – National Pipe Thread
OSHA – Occupational Safety and Health Administration
PSI – Pounds Per Square Inch
PVC – Poly Vinyl Chloride
RPM – Reflective Pavement Markers
SDR – Standard Dimension Ratio
SFWMD – South Florida Water Management District
SSPC – Society for Protective Coatings
UV – Ultraviolet
WLWCD – West Lauderdale Water Control District

GENERAL PROCEDURES

§127.10 ENGINEERING PERMITTING PROCEDURES

127.10 (A) ***Applicability.*** These Engineering Standards is a compilation of the minimum accepted design requirements for engineering and construction work, both municipal and private, performed within the limits of the City. The City is served by two distinct utility systems. The Indian Trace system is governed by City codes with respect to construction and the Bonaventure system is governed by the City of Sunrise codes.

Engineering permits shall be applied for to the City/ITDD/BDD for all engineering construction that occurs within public or private Rights-Of-Way, easements or on Private Property such as:

1. Water distribution systems
2. Sewerage systems
3. Sewerage pumping stations
4. Drainage systems
5. Stormwater management facilities
6. Roads
7. Parking areas
8. Earthwork
9. Bulkheads
10. Driveway aprons and Sidewalks
11. Landscaping and irrigation within Rights of Way
12. Other items as determined by the City

127.10 (B) ***Submittal Requirements***

127.10 (B)(1) City Engineering Permit Application Form with all requested information provided.

127.10 (B)(2) Five complete sets of engineering drawings (including water, Sewer, paving, drainage, landscaping, pavement marking and signing, and signalization, signed and sealed by an Engineer). Original signature shall be on the seal. All drawings shall be submitted on sheets that measure 24 inches by 36 inches (five folded sets of prints required). In addition five signed and sealed surveys for the site shall be submitted and include all above ground improvements, easements, underground utilities, and existing grades. If work is to be performed in an adjoining Right of Way, the same requirements apply to that area.

127.10 (B)(3) Drainage calculations acceptable to SFWMD and consistent with the approved site plan. Drainage calculations shall be signed, sealed and dated by an Engineer registered in the State of Florida.

127.10 (B)(4) Certified Engineer's Cost Estimate for construction of all public and private work including quantity take-offs and unit prices, or a construction contract.

127.10 (B)(5) Permit fees shall be provided with the application package. The fee shall be in the form of a check payable to the City and in accordance with the Schedule of Fees.

127.10 (C) ***Engineering/Utility Construction Plan Requirements.*** Plans reviewed for Engineering Permits require information in sufficient detail to assure that the minimum standards of the City will be upheld. A review will be made to insure that the following information is provided and that the standard City details are followed. Additional information will be requested as needed.

127.10 (C)(1) All drawings are to be submitted on sheets that measure 24 inches by 36 inches (five folded sets of prints required).

127.10 (C)(2) A location map shall be included on the drawing.

127.10 (C)(3) Each sheet shall bear a seal and original signature of the design Engineer and include a title block, north arrow, scale, date, and references as to source of design information and notes.

127.10 (C)(4) Horizontal scale shall be between 1inch equals20 feet and 1inch equals 60feet; vertical scale to be between 1inch equals 2 feet and 1inch equals 6 feet. Regardless of the scale, an overall layout of the proposed project shall be included on one sheet of the plans submitted, indicating all phases of construction, existing utilities and proposed utilities. Where there is more than one sheet of drawings, a sheet index diagram is required.

127.10 (C)(5) All Rights-Of-Way and easements shall be clearly defined, with easements referenced as to whether by Plat or otherwise. All easements shall be shown on design and as-built drawings.

127.10 (C)(6) Size and type of material shall be shown for all water and Sewer mains and service lines. Size and type of valves and other appurtenances to the systems shall be clearly indicated.

127.10 (C)(7) The exact location and size of all mains shall be shown within the Right-Of-Way or within an easement. All service line locations and sizes shall be indicated on plans. Distances from Right-Of-Way Lines, property lines and from physical features to the water and Sewer mains are required on all drawings.

127.10 (C)(8) Water distribution systems shall be designed so as to provide a continuous looped system with two independent sources of water during all phases of construction.

127.10 (C)(9) All line deflection points shall be indicated (horizontal and vertical) on the plans. All water mains shall cross over drainage and Sewer lines. If this is unavoidable, it shall be indicated on the drawings.

127.10 (C)(10) Profiles are required for gravity Sewer mains with the following information: invert elevation, rim elevation, slopes, profile grade (center line or base line), continuous station measurements, service laterals, other conflict features such as drainage pipes and material (PVC or DIP, etc.). Manholes shall not be installed under parking spaces. Manholes shall be consecutively numbered.

127.10 (C)(11)Off-set dimensions and detail drawings are required for all appendages; adjunct or auxiliaries from the main, enlarged sketches are required for all areas where the details cannot readily be seen.

127.10 (C)(12) Public and private Roadways shall be labeled and the names and/or numbers of the Roadways, Streets, avenues, etc. are to be clearly indicated on the plans. If the property is inside a block, then the side Streets are to be shown with the names written and distances from the subject property to the side Streets are to be written. Indicate lot and block numbers, if applicable.

127.10 (C)(13) The perimeter boundary lines of property to be serviced shall be clearly shown.

127.10 (C)(14) The outlines of buildings to be serviced shall be shown.

127.10 (C)(15) Bench mark positions and their vertical values shall be shown.

127.10 (C)(16) The lot and block numbers of the property to be serviced shall be shown. Adjoining lots and block numbers and Owners are to be shown, reference as to Plat is to be written, legal description of the property is to be written and indicated on the drawings. The Street or mailing address shall be shown.

127.10 (C)(17) Utilities shall be located within Public Rights-Of-Way or in easements and shall be shown on all as-built drawings.

127.10 (C)(18) Location of water meters and their sizes with service line sizes shall be shown. Meters shall be installed in green areas, at the Right-Of-Way Line and in non-Traffic areas as approved by the City. One meter per site plan will be permitted unless approved otherwise by the City.

127.10 (C)(19) All construction plans for work including paving and drainage construction shall contain the following:

127.10 (C)(19)(a) Paving and drainage construction plans

127.10 (C)(19)(b) Paving and drainage details

127.10 (C)(19)(c) Paving and drainage specifications

127.10 (C)(19)(d) Pavement markings and signage plans

127.10 (C)(19)(e) Proposed off-site improvements plans

127.10 (C)(19)(f) Elevations of ambient ground along the perimeter of this parcel

127.10 (C)(19)(g) As-built information of existing roads, drainage, Sidewalks, electric poles, light poles and other facilities

127.10 (C)(19)(h) Information for lakes and canals

127.10 (C)(19)(i) Recorded and proposed easements and Rights-Of-Way

127.10 (C)(20) Easement descriptions shall be written clearly with a point of beginning and a point of termination. Easements shall be shown on all plans. The plans shall reflect the description and shall carry additional information to facilitate construction of the worded description. Street corners shall be shown and the description should relate the property being described to the Streets. The scale shall be such to enable the direction of lines to be clearly observed. Where warranted, the plan shall be on more than one sheet with proper match lines shown for each Street. The City reserves the right to approve the description and plans.

127.10 (C)(21) All pavement or parking areas shall be shown and referenced; all final planned elevations shall be established.

127.10 (C)(22) Apart from the showing of all meters, their sizes, locations etc. on the plan sheet, a summary note shall be written on the front sheet stating:

127.10 (C)(22)(a) The number and size of water meters (if available)

127.10 (C)(22)(b) The use for the building; i.e., commercial, stores, factory, etc.

127.10 (C)(23) The City reserves the right to approve all drawings (preliminary design, final designs, preliminary and final Record Drawings), as to technical representations, engineering consideration/designs, draftsmanship, clarity, scale, precision, confusion, etc., which drawings shall at all times be in conformity with City minimum engineering standards, specifications and practices.

127.10 (C)(24) Drawings are reviewed for general compliance with City requirements ONLY. The Engineer of Record shall be completely responsible for the engineering design, technical competency and accuracy. The plans are approved with the condition that they SHALL conform to all City Ordinances, codes, standards and requirements. Plans reviewed for Engineering Permits require information in sufficient detail to assure the minimum standards of the City will be upheld. A review will be made to insure that sufficient information is provided and that the standard City details are followed. Additional information will be requested as needed. In case of conflict, the City Code of Ordinances shall supersede the plans. It shall be the responsibility of the Engineer of Record to have the plans approved by all other applicable federal, State, county or local agencies.

127.10 (C)(25) Plumbing Inspector/Fire Department approval does not constitute approval of water and Sewer construction drawings.

127.10 (C)(26) Upon completion of a satisfactory final inspection, results will be certified by the City to the several regulating agencies for their use in granting final use permits, according to their requirements.

127.10 (C)(27) Acceptance of completed systems by a Bill of Sale shall be required.

127.10 (D) ***Requirements Prior to Engineering Permit Issuance.*** The following items shall be provided before an Engineering Permit will be issued.

127.10 (D)(1) Upon completion of a satisfactory final inspection, results will be certified by the City to the several regulating agencies for their use in granting final use permits, according to their requirements.

127.10 (D)(2) A copy of a license or certificate of competency on file with the City that qualifies the Applicant to perform the work

127.10 (D)(3) All construction shall be performed within an easement, or dedication made to the ITDD, BDD, or the City. The easement or dedication shall encompass all the permitted improvements. An Applicant may grant a "blanket easement" for the entire site, exclusive of buildings.

127.10 (D)(4) Approved engineering drawings.

127.10 (E) ***Additional Requirements Prior to Engineering Permit Issuance as required by the City.***

127.10 (E)(1) Second Order Drainage Calculations signed and sealed by an Engineer.

127.10 (E)(2) A Maintenance of Traffic Plan.

127.10 (E)(3) DERD approval for any wetland or hazardous materials issues and sanitary Sewer collection and transmission.

127.10 (E)(4) BCHD approval for water distribution.

127.10 (E)(5) SFWMD approval for drainage and irrigation.

127.10 (E)(6) FDOT approval.

127.10 (E)(7) FDEP approval.

127.10 (E)(8) BCED approval.

127.10 (E)(9) BCTED approval.

127.10 (E)(10) AT&T approval for telephone service.

127.10 (E)(11) FPL approval for electricity.

127.10 (E)(12) Local cable provider approval.

127.10 (E)(13) City Tree removal permit.

127.10 (E)(14) City of Sunrise approval if water or sanitary improvements are located in BDD.

127.10 (E)(15) Performance Bond.

127.10 (F) ***Applicable Codes.***

127.10 (F)(1) *General:* All construction and materials shall conform to the Standards and Specifications of the City, DERD, BCHD, BCTED, SFWMD, and all other local and national codes where applicable.

127.10 (F)(2) *Construction safety:* All construction shall be performed in a safe manner, specifically, the rules and regulations of the OSHA and the MUTCD shall be strictly observed.

127.10 (F)(3) *Survey data:* Elevations on the plans or referenced in the specifications are based on National Geodetic Vertical Datum of 1929 (NGVD).

§127.11 PRECONSTRUCTION RESPONSIBILITIES

127.11 (A) After obtaining an engineering construction permit from the City and prior to the commencement of construction, the contractor shall arrange a Preconstruction Conference to include the City Engineer, the Owner, a Utility representative, and the Engineer of Record.

127.11 (B) The contractor shall obtain a "SUNSHINE One Call" Certification number and notify City Utilities at least 48 hours prior to beginning any excavation.

127.11 (C) Prior to beginning construction, the contractor shall verify the size, location, elevation, and material of all existing utilities within the area of construction.

127.11 (D) The contractor shall be responsible for damage to any existing utilities.

127.11 (E) If upon excavation, an existing utility is found to be in conflict with the proposed construction or to be of a size or material different from that shown on the plans, the contractor shall immediately notify the Engineer of Record, who will in turn notify the City.

127.11 (F) All NPDES safe guards shall be installed prior to beginning of construction and maintained throughout the construction

§127.12 INSPECTION REQUIREMENTS DURING CONSTRUCTION

127.12 (A) ***Required inspections.*** During construction activities requiring an engineering permit, the City shall perform inspections of various portions of the construction activity. The permit holder shall notify the City for all inspections/appointments 48 hours in advance. The permit holder shall forward all required documentation to the City.

In the event a test or inspection fails, a required party is not present or the appointment requester fails to cancel within one hour of the scheduled inspection, the requesting party will be charged a minimum fee to cover up to one hour of the inspector's time.

The permit holder is responsible for the additional cost of inspections for any construction activities occurring outside normal working hours (5:00 pm to 8:00 am, Monday through Friday) or on Saturdays, Sundays and holidays. Arrangements for inspections outside normal working hours shall be made a minimum of five days in advance of construction activity. Additional inspections or documentation may be required as determined by the City.

The following construction activities require inspections. This list is general in nature and the City may require additional inspections.

127.12 (B) ***Paving installation.***

127.12 (B)(1) Demucking and filling.

127.12 (B)(2) Stabilized subgrade.

127.12 (B)(3) Limerock basecourses.

127.12 (B)(4) Asphalt paving.

127.12 (B)(5) Final inspection at the time of Certificate of Occupancy.

127.12 (B)(6) *The following reports are needed during paving installation:*

127.12 (B)(6)(a) Density test reports (subgrade and basecourse)

127.12 (B)(6)(b) LBR test reports (subgrade)

127.12 (B)(6)(c) Calcium carbonate reports (basecourse)

127.12 (B)(6)(d) Certification of type of asphalt

127.12 (B)(6)(e) Inspection reports for all underground utility lines such as: water, Sewer, drainage, gas, power, phone, TV, etc.

127.12 (B)(6)(f) Certificate that the entire pavement area has been completely demucked and backfilled properly with suitable material.

127.12 (C) ***Drainage installation.*** All joints and drainfields are to be inspected prior to backfill. Final inspection shall be at the time of Certificate of Occupancy.

127.12 (D) ***Sidewalks installation.*** Alignment, depth, width and pedestrian and handicapped ramp details, as indicated in the City code of ordinances, shall be inspected prior to concrete and asphalt placing. Final inspection shall be done at the time of Certificate of Occupancy.

127.12 (E) ***Traffic signs, road signs & pavement markings installation.*** A final inspection at the time of Certificate of Occupancy is to be performed. Traffic signals shall be inspected prior to turn on, and field tests consisting of a 48 hour test and a 60 day burn-in period shall occur prior to final acceptance.

127.12 (F) ***Water distribution installation.*** This applies to water distribution belonging to ITDD. For BDD water and Sewer refer to City of Sunrise requirements.

127.12 (F)(1) Connection to Existing Systems.

127.12 (F)(2) Filling and Flushing.

127.12 (F)(3) Hydrostatic Pressure Testing.

127.12 (F)(4) Chlorination/Bacteriological Sampling (note: A valid BCHD bacteriological clearance letter shall be submitted prior to placement in service).

127.12 (F)(5) All joints to be inspected prior to backfill.

127.12 (G) ***Sewer collection installation.*** This applies to Sewer collection belonging to ITDD. For BDD water and Sewer refer to City of Sunrise requirements. Prior to acceptance by the City, a FDEP Certification of Completion shall be submitted.

127.12 (G)(1) Structures (prior to installation).

127.12 (G)(2) Connection to Existing Systems.

127.12 (G)(3) Lamping.

127.12 (G)(4) Structure Application of Protective Coatings (external and internal).

127.12 (G)(5) All joints to be inspected prior to backfill.

127.12 (H) ***Sewer transmission installation.*** This applies to Sewer transmission belonging to ITDD. For BDD water and Sewer refer to City of Sunrise requirements.

127.12 (H)(1) Connection to Existing Systems.

127.12 (H)(2) Flushing.

127.12 (H)(3) Hydrostatic Pressure Testing.

127.12 (H)(4) Pump Station Start-up.

127.12 (H)(5) All joints to be inspected prior to backfill.

§127.13 SHOP DRAWINGS

127.13 (A) Prior to issuance of an Engineering Permit, shop drawings shall be submitted to and reviewed by the Engineer of Record and the City in ITDD and the City of Sunrise in BDD for sanitary manholes, fire hydrants, valves, piping, Lift Stations and other accessories. Catalogue literature shall be submitted for water and Sewer pipes, fittings and appurtenances.

127.13 (B) Individual shop drawings for all precast structures are required. Catalogue literature will not be accepted for precast structures.

127.13 (C) Prior to any equipment order for Traffic signals, the contractor shall submit for approval, equipment specifications or design data for all material proposed.

§127.14 TEMPORARY FACILITIES

127.14 (A) ***Temporary utilities.*** It shall be the contractor's responsibility to arrange for or supply water service, sanitary facilities and electricity to his employees and subcontractors for their use during construction.

127.14 (B) ***Traffic regulation.***

127.14 (B)(1) Maintenance of Traffic in the Public Right-Of-Way shall be in accordance with the MUTCD and approved by BCTED.

127.14 (B)(2) All open trenches and holes adjacent to Roadways or walkways shall be properly marked and barricaded to assure the safety of both vehicular and pedestrian Traffic.

127.14 (B)(3) No trenches or holes near walkways or in Roadways or their shoulders are to be left open during nighttime hours without permission from the City.

§127.15 PROJECT CLOSEOUT

127.15 (A) ***Cleaning up.***

127.15 (A)(1) During construction, the project site and all adjacent areas shall be maintained in a neat and clean manner. Upon final clean up, the project site shall be left clear of all surplus material or construction debris. The paved areas shall be swept broom clean.

127.15 (A)(2) The contractor shall restore or replace, when and as directed by the Engineer or the City, any public or Private Property damaged by the work, equipment,

employees or subcontractors to a condition at least equal to that existing immediately prior to the beginning of operations. To this end, the contractor shall do as required, all necessary Highway or driveway, Sidewalk and landscaping and irrigation work. Suitable materials and methods shall be used for such restoration.

127.15 (A)(3) Where material or debris has washed or flowed into or been placed in lakes, gravity Sewer, ditches, drains, catch basins, or elsewhere as a result of the contractor's operations, such material or debris shall be removed and satisfactorily disposed of during progress of the work, and the area kept in a clean and neat condition.

127.15 (A)(4) When working in and around existing drainage canals, and/or lakes, appropriate silt barriers shall be installed as required DERD.

127.15 (B) ***Project record documents.*** Upon completion of construction, the contractor shall submit to the City four complete sets of acceptable "as-built" drawings, and two complete set of "as-builts" in digital format (AutoCAD Release 13 or latest version acceptable to the City) including sheets for all water, Sewer, paving, drainage, details, and geometric controls, prepared by a land surveyor licensed by the State of Florida and certified by the Engineer of Record. All easements and buildings are to be clearly shown. All buildings to be serviced are to be shown. Record drawings are to have all the design plan information plus any changes made during construction.

127.15 (B)(1) The contractor shall maintain accurate and complete records of work items completed.

127.15 (B)(2) All "as-built" information submitted to the City Engineer shall be sufficiently accurate, clear and legible to satisfy the City Engineer that the information provides a true representation of the improvements constructed.

127.15 (B)(3) A letter of certification by the Engineer of Record shall be submitted to the City.

127.15 (C) ***Maintenance bonds.*** A 100% maintenance cash bond shall be held for a period of one Year from the date of acceptance of the project within Rights-Of-Way and/or for facilities to be dedicated to the City.

127.15 (D) ***Maintenance bond release.*** For projects with a maintenance bond, a letter of notification will be mailed to the Owner, approximately 90 days prior to the maintenance bond expiration date, by the City. For projects involving building construction, if 50 percent of the Certificates of Occupancy have been issued for the buildings in the improved area, the City will request the developer to arrange for reinspection for the bonded improvements. The following are the requirements for bond release:

127.15 (D)(1) Completion of all items on the water distribution section of the final engineering inspection checklist.

127.15 (D)(2) Completion of all items on the Sewer collection and transmission section of the final engineering inspection checklist.

127.15 (D)(3) Completion of all items on the pavement section of the final engineering inspection checklist.

127.15 (D)(4) Completion of all items on the paving, grading and drainage section of the final engineering inspection checklist.

Any defects in the water distribution, Sewer collection or paving, grading and drainage, shall be corrected and completed, and approved by the City 21 days prior to the bond expiration date. Otherwise, the maintenance bond shall be extended until all deficiencies are completed and approved.

127.15 (E) ***Closeout procedures***. At the conclusion of the project, the following items shall be submitted as a part of the closeout package 30 days before the final inspection:

127.15 (E)(1) A bill of sale with the actual value of all public improvements to be transferred to the City.

127.15 (E)(2) A maintenance bond as described herein.

127.15 (E)(3) All release of liens for public improvements to be transferred to the City.

127.15 (E)(4) Completion of all items on the final engineering inspection checklist.

127.15 (E)(5) The actual itemized construction quantities and cost for all improvements, certified by the Engineer of Record.

127.15 (E)(6) Submission of final inspection report and all required testing reports. including the following:

127.15 (E)(7) Easement dedication form for all facilities to be dedicated to the City.

127.15 (E)(8) All easements shall be in place prior to closeout of the project. Within 30 working days, the City will inform the Owner in writing if the public improvements are acceptable. If the public improvements are acceptable, the Owner will submit a maintenance bond to the City.

STREET LIGHTS, BRIDGES, UNDERGROUND UTILITES & EASEMENTS

§127.20 STREET LIGHTS, BRIDGES & UNDERGROUND UTILITIES

127.20 (A) ***Street Lights.***

127.20 (A)(1) All subdivision Plats submitted to the City shall provide the necessary easements for installation and maintenance of street lights within the subdivision.

127.20 (A)(2) The street light poles shall be aluminum poles, with underground wiring. The design and spacing of the street lights shall conform to the remainder of the City's overhead street lighting system.

127.20 (B) ***Illumination for Streets.*** Private roads in residential zoning districts shall be allowed in accordance with the following criteria:

127.20 (B)(1) *Street Lighting:* Street lighting shall be provided to deliver an illumination equal to that provided for public roads, but not less than an average illumination of 1/2 foot-candle within the Roadway. The street light poles shall be made of aluminum which meets the standards set forth below, and all cables and wires shall be underground. The poles and lines shall be located outside the Roadway width.

127.20 (B)(2) *Standards for street light poles:* Light poles shall withstand wind loads as required by Florida Building Code, latest edition. The pole shall be aluminum and shall be able to carry a minimum weight of 100 pounds at its top. Installation shall be done by direct burial. The pole material shall meet the following ASTM standards: D635, A153, A356, A319, and A307.

127.20 (B)(3) *Design style standards for decorative light poles:* The design and style of decorative light poles shall be reviewed by the City.

127.20 (C) ***Illumination for Parking Areas.*** Parking lots for industrial, commercial and recreational, subdivisions and for residential subdivisions with multi-family units or Single-Family attached units shall be constructed in accordance with the City Code of Ordinances.

127.20 (D) ***Bridges.*** Bridges that cross over water bodies, owned by the City and located outside of the public-Right-Of-Way, require an engineering permit and shall be subject to review by the City Engineer.

127.20 (E) ***Underground utilities.*** Within the City, all utilities including, water, Sewer, telephone, fiber optic cable, television cable, irrigation, street lighting and electrical systems shall be installed underground. Primary facilities providing service to the site may be exempted from this requirement. Utility transformers shall be pad mounted or installed in a transformer vault. The developer shall provide adequate landscaping with shrubs and plants to screen all utility facilities permitted above ground.

127.20 (E)(1) A permit is required for the construction of all new underground utilities, or related facilities in Public Rights-Of-Way or ingress/egress easements dedicated for the use of pedestrian and vehicular Traffic. These facilities shall be designed and installed so as to safely sustain any vehicular loads that might be placed upon them.

127.20 (E)(2) Each underground utility crossing of paved roads shall be made by directional drilling as approved by the City Engineer unless an alternate method is approved by the City Engineer. Proposed open cuts shall be shown on the drawings submitted for approval.

127.20 (E)(3) When a plan is required for maintenance of Traffic, the contractor shall adhere to such plans as approved, in strict accordance with the provisions of the MUTCD and applicable FDOT indexes throughout the construction period.

127.20 (E)(4) All permitted work in rights-of way shall be done in strict accordance with the provisions of the OSHA regulations, and all other applicable codes.

127.20 (E)(5) Edges of permanent type pavement shall be pre-cut straight, clean and square beyond any damaged base area. All existing pavement damaged by utility cuts shall be restored. When the removal of Sidewalks, curbs or gutters are necessary for construction, they shall be removed in full sections or a minimum of five feet in length, and all broken edges cut smooth by use of a suitable power saw or other appropriate means.

127.20 (E)(6) Telephone, television or other signal carrying cable installed in an existing or planned paved area in any Public Right-Of-Way, shall be carried in approved steel, concrete or plastic conduit with a minimum cover of 30 inches.

§127.21 EASEMENTS

127.21 (A) Easements across lots or centered on rear or side lot lines shall be provided for public utilities where necessary and shall be at least 15 feet in total width (12 feet for private), or as determined by the City to be adequate.

127.21 (B) Where a subdivision is traversed by a lake, there shall be provided a (25 foot minimum lake maintenance easement conforming substantially with the lines of such watercourses. Parallel Streets or parkways may be required in connection therewith where necessary for service or maintenance.

127.21 (C) Easements may be required for drainage purposes of such size and location as may be determined by the City Engineer.

127.21 (D) Easements 15 feet in width shall be dedicated to the City in the ITDD or the City of Sunrise in the BDD for all water mains, fire hydrants and meters.

127.21 (E) No structures below ground, utilities, or gas tanks shall be placed in easements without approval from the City.

127.21 (F) Easements 15 feet in width shall be dedicated to the City in the ITDD or the City of Sunrise in the BDD for all Sewer Force Mains, 8 inch gravity lines and manholes.

ROADWAY SPECIFICATIONS AND DETAILS

§127.30 EARTHWORK AND COMPACTION

127.30 (A) All organic and other unsuitable material shall be removed under those areas to be paved and for the full width of the Right-Of-Way.

127.30 (B) Suitable backfill shall be used and compacted as directed by the Engineer of Record. This backfill can be subjected to standard testing if required by the City Engineer.

127.30 (C) No blasting will be permitted.

§127.31 PAVING

127.31 (A) ***General.***

127.31 (A)(1) All underground utilities shall be completed (with accepted bacteriological and pressure tests) prior to construction of limerock base.

127.31 (A)(2) All existing pavement, cut or damaged by construction, shall be properly restored at the contractor's expense.

127.31 (A)(3) Where any proposed pavement is to be connected to existing pavement, the existing edge of pavement shall be saw cut.

127.31 (B) ***Materials.***

127.31 (B)(1) Base course shall be crushed limerock Miami Oolite with a minimum of 60% carbonates of calcium and magnesium.

127.31 (B)(2) Asphalt surfaces for Streets shall be 2 inches thick with 1 ¼ inch FDOT Type SP-12.5 asphaltic concrete unless otherwise specified on the plans.

127.31 (B)(3) Asphalt for parking areas shall be 1 ½ inches thick with two, ¾ inch lifts of Type FDOT Type SP-9.5 modified asphaltic concrete.

127.31 (B)(4) Reinforced concrete slabs shall be constructed of class 1 concrete with a minimum strength of 3,000 PSI and shall be reinforced with a 6 inch by 6 inch No. 6 gauge wire mesh.

127.31 (B)(5) All driveways shall be restored from edge of road to edge of Sidewalk and graded to prevent standing water.

127.31 (B)(6) All grass Swales shall be graded to allow stormwater to drain from impervious surface to and stored in center of Swale.

127.31 (B)(7) All sod shall be restored from edge of road to edge of Sidewalk or impacted areas. New sod used for restoration shall match existing sod.

127.31 (C) ***Installation.***

127.31 (C)(1) Subgrade for Roadway shall be compacted to a minimum of 98% of the maximum density AASHTO T-180 (latest revision).

127.31 (C)(2) Base course material for paved areas shall be a minimum thickness of 8″ placed on a single layer for Streets (6 inches for residential driveways, and designated parking areas).

127.31 (C)(3) Base course shall be compacted to 98% of the maximum density as per AASHTO T-180 (latest revision).

127.31 (C)(4) Installation of the wearing surface shall conform with the requirements of the FDOT standard specifications for type 1 asphaltic concrete or the latest revision for the approved Broward County mix.

127.31 (C)(5) Sidewalk within driveways shall be minimum 6 inch thick concrete 3000 PSI with 6inch by 6 inch # 10/10 gauge wire mesh.

127.31 (D) ***Testing.***

127.31 (D)(1) The finished surface of the base course and that of the wearing surface shall not vary more than ¼ inch from the template. Any irregularities exceeding this limit shall be corrected.

127.31 (D)(2) Density tests shall be taken by an independent testing laboratory, certified by the State of Florida where directed by the City Engineer.

127.31 (D)(3) All testing costs shall be paid for by the contractor.

§127.32 TRAFFIC SIGNALS

127.32 (A) ***Design standards.***

127.32 (A)(1) The design and construction of Traffic signals shall be in accordance with the following standards:

127.32 (A)(1)(a) FDOT Standard Specifications.

127.32 (A)(1)(b) Florida Roadway and Traffic Design Standards.

127.32 (A)(1)(c) MUTCD.

127.32 (A)(1)(d) Minimum Standards Applicable to Public Rights-Of-Way under Broward County Jurisdiction.

127.32 (A)(2) All materials and workmanship shall meet the requirements of MUTCD, Institute of Transportation Engineers, the National Electrical Code, Underwriters Laboratories, Inc., Industrial Control Standards of National Electrical Manufacturers Association, FDOT, BCTED, and applicable State and local agency standards.

127.32 (A)(3) All materials used in the construction of Traffic signals shall be manufactured by a firm engaged in the production of such materials for at least a five-Year

period, and shall be of the manufacturer's latest standard design, which complies with latest Broward County standards.

127.32 (A)(4) All Traffic signals shall have Weston style poles and mast arms with attached luminaires. These elements should preferably be aluminum. For mast arms longer than 60 feet, steel poles and mast arms can be used. All poles, mast arms and other accessories shall be given adequate rust protection treatment as specified in these standards.

127.32 (A)(5) Signal poles should have a height adequate to provide a minimum 17.5 feet clearance measured from the bottom of signal head to the crown of the road. The maximum height is determined by vertical sight distance as stated in the MUTCD. Poles shall be located at the Right-Of-Way Line (back of the Sidewalk), whenever possible.

127.32 (A)(6) Pole positions and conduit routing may be adjusted as approved by the City Engineer and the BCTED to prevent conflicts with utility and drainage structures.

127.32 (A)(7) A minimum of two signal heads shall be provided for each approach. Heads shall be located from 40 to 180 feet from the stop bar, where, because of the Roadway geometry, the nearest signal face is 180 feet or more beyond the stop bar, a supplemental near side signal face shall be used. Non-permissive left turn signals shall be three-section consisting of green arrow, yellow arrow and red ball. Use "left turn signal" sign adjacent to non-permissive left turn signal(s). Dual left turn lanes require two three-section turn signals. Use five-section head cluster for protected permissive left-turning movements where such movements are warranted.

127.32 (A)(8) All the signal indications shall be 12-inch glass lenses and LED for all indications unless otherwise specified by the BCTED

127.32 (A)(9) Pedestrian signal heads and push buttons are to be installed at all signalized intersections unless otherwise approved. Crosswalks shall be a minimum of 10 feet wide, with curb-cut ADA compliant ramps centered at each end. Pedestrian signals are to be aligned within crosswalks as closely as possible.

127.32 (A)(10) All "T" intersections shall have a four phase full activated controller in a BC 333 cabinet and all four-way intersections shall have an eight-phase full activated controller in a BC 333 cabinet unless otherwise specified by the BCTED. A BC 4T cabinet shall be used to accommodate an existing telephone drop location.

127.32 (A)(11) Detection for vehicular movement thru an approach shall be accomplished using mast arm mounted video detection cameras. All video vehicle detection systems shall be approved by the City Engineer prior to installation.

127.32 (A)(12) Coaxial cable for video detection are to be placed in its own separate conduit independent of signal cable conduit.

127.32 (A)(13) All poles, controllers, detector cabinets and other elements of the installation shall be grounded using a ground rod assembly or a ground rod array. The poles shall be grounded for a minimum depth of 60 feet, the loop detector pull boxes shall be grounded

for at least 10 feet, and the controller cabinet shall be grounded for at least 110 feet or latest specification from the BCTED.

127.32 (A)(14) All overhead street name signs attached to the mast arms shall be internally illuminated signs. These signs shall be designed and fabricated only by contractors that are included in the FDOT "Approved List of Vendors".

127.32 (B) ***Materials.***

127.32 (B)(1) The design of mast arms, poles, and pole foundations shall be in accordance with the "Standard Specifications for Structural Supports for Highway Signs, Luminaires, and Traffic Signals", AASHTO Copyright 1975. All shop drawings shall be signed and sealed by a registered structural Engineer.

127.32 (B)(2) Vehicle detector loop wire shall conform to the current. International Municipal Signal Association specification with the following exceptions:

127.32 (B)(2)(a) Loop wire shall be AWG #14 wire stranded 19/27; PVC insulation 0.032 inch thick, nylon jacket 0.010 inch thick, insulation voltage rating 600 volts. Temperature rating shall be 90 degrees centigrade maximum.

127.32 (B)(2)(b) Loop and lead-in to the controller cabinet shall be one continuous run with no splices. When splices are necessary, the splice shall be soldered, tapered and an approved waterproof coating applied (Scotch Guard or approved equal).

127.32 (B)(3) Video vehicle detection system shall be Video Trak-905 as manufactured by PEEK SYSTEM or approved equal to latest specification from the Broward County Traffic Engineering Division. All video vehicle detection systems shall be approved by the City Engineer prior to installation.

127.32 (C) ***Installation.***

127.32 (C)(1) Pole foundation installations shall be back-filled and compacted to a firm, stable condition equal to or greater than that of the surrounding soil. Where applicable, the pole base shall be finished flush with the adjoining Sidewalk so as to allow an obstruction free walking surface.

127.32 (C)(2) The pole and mast arms shall be so constructed, connected, and installed that in their final positions the centerline of the signal arm will maintain a clearance above the Street of not less than 20.25 feet and not greater than 21.25 feet.

127.32 (C)(3) Separate cables shall be installed to each pole including separate cables for pedestrian signals. Poles shall have flush hand-holes, one located near the base and one near the mast arm connection.

127.32 (C)(4) A - 1 inch diameter wire access hole with rubber grommet shall be field drilled and cold galvanized on each signal mast arm by the contractor. Each location shall be the responsibility of the contractor to verify prior to drilling.

127.32 (C)(5) The electrical circuits for luminaires and internally illuminated street name Signs shall be installed in separate conduits.

127.32 (C)(6) When steel structures are used, rust protection shall be provided. The rust protection procedure shall be as follows:

127.32 (C)(6)(a) After galvanizing but prior to painting, all galvanized surfaces shall be allowed to cool and vent gases produced during the cooling process.

127.32 (C)(6)(b) After galvanized surfaces have been allowed to air dry, they shall be cleaned to achieve a "brush blast" condition as defined by SSPC-SP6.

127.32 (C)(6)(c) Test galvanizing thickness to ensure sufficient galvanizing remains on the substrate to meet specification.

127.32 (C)(6)(d) At the upright base and for a length of 2 feet, the interior of the pole shall be mechanically cleaned and coated with a zinc rich epoxy powder 350° Fahrenheit minimum and 400° Fahrenheit maximum.

127.32 (C)(6)(e) The exterior surfaces of the pole structure shall be coated with a urethane or triglycidyl isocyanurate (TGIC) polyester powder to a minimum dry film thickness of 2.0 MILS (0.020"). The coating shall be electrostatically applied and cured by heating the steel.

127.32 (C)(6)(f) The color of the polyester powder shall be Spartan White or approved equal and similar. Sample chips (2"X4") shall be included with submittals, at least one of which to become the property of Broward County, and at least one to be returned marked "Approved," if acceptable.

127.32 (C)(6)(g) After all coatings have sufficiently cured per manufacturer's recommendation, poles shall be shipped in protective wrapping of 3/16 inch U.V. inhibiting plastic backed packing.

§127.33 ROADS

127.33 (A) ***Design standards for Streets.***

127.33 (A)(1) *Conformity to Broward County Trafficways Plan:* The design, alignment and cross-section of all Streets, roads and Highways included on the Broward County Trafficways Plan shall conform to the requirements of the Broward County Land Development Code.

127.33 (A)(2) *Relation to existing Street system:* The arrangement of Streets in new subdivisions shall make provisions for proper extension of existing dedicated Streets in existing subdivisions, where such extension is appropriate.

127.33 (A)(3) *Provisions for platting adjoining unplatted areas:* The arrangement of Streets in new subdivisions shall be such so as to facilitate and coordinate with the desirable future platting of adjoining unplatted property of a similar character, and provide for local circulation and convenient access to neighborhood facilities.

127.33 (A)(4) *Protection from through Traffic:* Minor and collector residential Streets shall be laid out and arranged so as to discourage their use by through Traffic. Residential Streets shall not connect with industrial areas where avoidable.

127.33 (A)(5) *Arterial Street frontage:* Where a residential subdivision or Residential Property abuts an existing or proposed arterial Street, the City may require separate local frontage roads, reverse frontage with screen planting contained in a non-access reservation along the rear property line, deep lots with or without rear service alleys, or other such treatments as may be necessary for adequate protection of residential properties and to assure separation of through and local Traffic.

127.33 (A)(6) *Plats adjacent to expressway Right-Of-Way:* Where a subdivision borders on or contains a Right-Of-Way for an expressway, drainage canal or waterway, the City may require a Street approximately parallel to and on each side of such Right-Of-Way at a distance suitable for the appropriate use of the intervening land. Such distances shall also be determined with due regard for requirements of approach grades for future grade separations.

127.33 (A)(7) *Reserve Strips:* Reserve Strips controlling access to Streets shall be prohibited except where their control is placed within the jurisdiction of the City.

127.33 (A)(8) *Private Roadway systems:* Private Roadway systems may be permissible if the private entity enters into an agreement with the City, acceptable to the City, for construction and maintenance of such facilities. All private Streets shall be required to meet all requirements for public Streets.

127.33 (A)(9) *Half Streets:* New half or partial Streets shall not be permitted.

127.33 (A)(10) *Dead end Streets:* Dead end Streets shall be prohibited, except where appropriate as a stub to future Street extension, or when designed as a circular Cul-De-Sac.

127.33 (A)(11) *Cul-De-sac Streets:*

127.33 (A)(11)(a) Cul-De-Sacs, permanently designed as such, shall be required when dead end Streets exceed 300 feet in length.

127.33 (A)(11)(b) Cul-De-Sacs shall be provided at the closed end with a circular dedicated area not less than 100 feet in diameter for turnaround purposes.

127.33 (A)(12) *Street Rights-Of-Way:*

127.33 (A)(12)(a) Unless otherwise indicated or required by the Broward County Trafficways Plan, Street Rights-Of-Way shall not be less than the following:

Street Type	***R/W (feet)***
Major or Minor Arterial Roadway	106
Collector Roadway (Industrial and commercial areas)	80
Collector (Residential)	60
Local Roadway (Business and residential)	50
frontage roads	50

127.33 (A)(12)(b) Additional Right-Of-Way width may be required to promote public safety and convenience, or to assure adequate access, circulation and parking in high density residential areas, commercial areas, and industrial areas.

127.33 (A)(13) *Street alignment:*

127.33 (A)(13)(a) Curved linear Streets are recommended for residential collector and local Streets in order to discourage excessive vehicular speeds and to provide attractive vistas.

127.33 (A)(13)(b) Whenever a Street changes direction or connecting Street lines deflect from each other by more than 10 degrees, there shall be a horizontal curve.

127.33 (A)(13)(c) To ensure adequate sight distance, minimum centerline radii for horizontal curves shall be as follows:
Minor Streets.....150 feet
Collector Streets.....300 feet
Secondary arterial Streets and section line roads.....500 feet
Major arterial thoroughfares.....750 feet

127.33 (A)(13)(d) A tangent at least 100 feet long shall be provided between reverse curves on collector Streets, and at least 250 feet long on major and minor arterials.

127.33 (A)(13)(e) Site distances at intersections shall be in accordance with BCTED standards and MUTCD design criteria where none exist in BCTED standards. The City Engineer may require additional site distances be maintained.

127.33 (A)(14) *Street intersections:*

127.33 (A)(14)(a) Streets shall be laid out to intersect as nearly as possible at right angles. No Street shall intersect another at an angle of less than 60 degrees, except at a "Y" intersection of two minor Streets.

127.33 (A)(14)(b) Multiple intersections involving the junction of more than two Streets shall be prohibited.

127.33 (A)(14)(c) "T" intersections of minor and collector Streets are to be encouraged.

127.33 (A)(14)(d) Intersections with arterial Streets shall be located not less than 660 feet apart, measured from centerline to centerline.

127.33 (A)(14)(e) Streets entering opposite sides of another Street shall be laid out directly opposite each other or with a minimum offset of 125 feet between their centerlines.

127.33 (A)(14)(f) Minimum property line radii at Street intersections shall be 25 feet for minor Streets and where the angle of intersection is less than 60 degrees; a greater radius may be required.

§127.34 PARKING AREAS

127.34 (A) ***Design standards for parking areas.*** Parking lots for industrial, commercial and recreational subdivisions and for residential subdivisions with multi-family units or Single-Family attached units shall be constructed in accordance with the following criteria:

127.34 (A)(1) *Pavement construction:* The parking area pavement shall be constructed of minimum 12 inches compacted and stabilized subgrade (minimum 40 LBR), minimum 8 inches compacted limerock basecourse 6 inches for Parking Stalls LBR=100). The pavement shall have a cross slope of 2% and a longitudinal slope of 0.3% minimum for normal crown section. The pavement shall have a cross slope of 2.0% minimum and a longitudinal slope of 0.5% minimum for inverted crown section on runs greater than 100 feet. The pavement shall have a cross slope of not less than 1.0% with an average slope of not less than 2.0% and a longitudinal slope of not less than 0.5% on runs less than 100 feet. The run is defined as the length of pavement between high and low elevations points. All outside turning radii shall be minimum 50 feet.

127.34 (A)(2) *Curbing and Wheel Stops:* In landscaped areas, Type "D" curbing shall be installed along all curbed sections where vehicular impact can be reasonably anticipated. This includes terminal and interior islands, all turning radii, driveway connections to Public Rights-Of-Way or private collector Roadway systems, and along all curvilinear curbed sections with a radius of 100 feet or less. Extruded curbing may be utilized on all other curbed areas or any areas protected by fixed wheel stops (wheel stops shall be a maximum height of 5 inches).

127.34 (A)(3) *Driving Lanes:* Driving lanes shall have a minimum clear width of 24 feet for two-way Traffic, 15 feet for one-way Traffic and 12 feet for drive-thru/drop-off Traffic. When parking spaces are provided at 60 degrees angle, the one-way driving lane shall be minimum 18 feet clear. A 24 inch wide white stop bar shall be provided at the end of each driving lane. The driving lanes shall be delineated with a double yellow line for a minimum of 25 feet behind each stop bar location.

127.34 (A)(4) *Parking spaces:* Standard parking spaces shall be minimum 9 feet in width and 18 feet in length. Angle parking shall be designed to provide a clear 10 foot by 20 foot rectangle for each parking space. Handicapped parking space shall be a minimum of12 feet in width by 18 feet in length. Parking spaces for parallel parking shall not be less than 9 feet in width and 23 feet in length. Continuous Type "D" or "F" concrete curbing or individual 6 feet long concrete wheel stops shall be installed for each space (extruded curbing is permissible if protected). 4 inch wide white lines shall be provided on either side of each space identifying the limits of the space. The number of parking spaces shall conform to the City Land Development Code.

127.34 (A)(5) *Pavement markings and signs:* All pavement markings and signs shall conform to the "BCTED and the MUTCD standards. All pavement markings shall be of thermoplastic material, except the 4 inch white lines on either side of a parking space and the 4 inch blue lines for handicapped parking.

127.34 (A)(6) *Lighting:* The light poles shall be made of aluminum and all wires and cables shall be underground. Alternative aesthetic lighting fixtures may be permissible subject to City approval.

127.34 (A)(7) *Drainage:* All drainage lines and structures shall be installed in accordance with the "Grading and Drainage Regulations and Standards", Broward County Transportation Department, Water Management Divisions, latest edition. Surface water along inverted crown shall be allowed to travel only in straight lines. Catch basins shall be provided at each change of direction.

127.34 (A)(8) *Guardrails:* FDOT type guardrails shall be provided where the edge of the parking area pavement is closer than 28 feet from the edge of water of a lake, canal or other waterway. The guardrail shall be installed in conformance with FDOT Standard Index.

127.34 (A)(9) *Enforcement:* The City shall be responsible to review plans, issue construction permits, conduct inspections and approve all parking areas in the City.

127.34 (B) ***Property maintenance for private parking lots.***

127.34 (B)(1) All buildings and structures for private parking shall be maintained in a secure, safe, and attractive condition. Deteriorated or used metal covering on any such existing or subsequently constructed carport structure shall be repaired or replaced so as to render same in a safe and attractive condition that is neither physically nor visually a blighting influence.

127.34 (B)(2) Off-street parking facilities shall be identified as to purpose and as to location when not clearly evident from a Street or alley. Off-street parking facilities including access aisles and driveways shall be surfaced FDOT Type S-3 asphaltic concrete course, and maintained in a smooth, well-graded condition without any potholes, pavement deterioration, loose aggregate, surface irregularities, and any Traffic/safety hazard.

127.34 (B)(3) All off-street parking facilities shall be drained so as not to cause any nuisance on adjacent or Public Property. All surface stormwater shall be drained off the

pavement for proper disposal to the designated areas or structures within a reasonable time. All drainage lines and structures shall be maintained properly at all times to insure full efficiency.

127.34 (B)(4) All wheel stops, curbing and Sidewalks shall be maintained properly to ensure safe and convenient vehicle and pedestrian Traffic at all times. Broken, damaged or loose wheel stops, curbing and Sidewalks shall immediately be repaired/replaced.

127.34 (B)(5) All pavement markings and signage shall be maintained properly at all times to conform to the standards of the MUTCD. All parking spaces, stop bars, directional arrows, centerlines, edge lines and other pavement markings shall be painted properly to be clearly visible and well defined at all times. Stop signs and all other signs shall be maintained properly at all times as to the size, height, material, design, location, visibility, clarity and other features to conform to the MUTCD.

127.34 (B)(6) The off-street parking facilities shall conform at all times to the site plan as approved by the City, including, but not limited to the location and size of all regular and handicap parking spaces.

127.34 (B)(7) All private commercial parking lots shall be inspected periodically by the City to insure proper maintenance and conformity to the approved site plan. The Owner, Tenant, manager, or their agent shall be notified in writing of any discrepancies and shall, within twenty calendar days from the time of notification, correct the discrepancy.

§127.35 DRIVEWAYS, SIDEWALKS AND SWALES.

127.35 (A) ***Driveways.*** Wherever vehicular entrances and exits are involved, the number, size and distance apart of entrances and exits and the specific design thereof shall comply with the established standards and requirements of the FDOT where a State or Federal Highway is affected, and with the standards and requirements of the City Engineer in all other instances. Where both State and City roads are involved, the higher standard shall apply.

127.35 (B) ***Sidewalks.***

127.35 (B)(1) Concrete Sidewalks with a minimum of five feet in width shall be installed in public Rights-Of-Way. In a private area where there are no public Rights-Of-Way, concrete Sidewalks with a minimum of 5 feet in width shall be installed which shall run parallel to all Streets in the area.

127.35 (B)(2) Design specifications shall be in accordance with the City's engineering standards, including required handicapped accessibility.

127.35 (C) ***Swales.***

127.35 (C)(1) Landscaping and maintenance of Swale areas.

127.35 (C)(1)(a) All Swale areas and water bank areas shall be sodded in species normally grown as permanent Lawns in the City.

127.35 (C)(1)(b) All Swale areas shall be free and clear of shrubs, Hedges, asphalt, timbers, cement or rock substances.

127.35 (C)(1)(c) All Swale and water bank areas within shall be maintained, kept in good repair, and kept free from obstructions which may be hazardous to the welfare of the general public by the contiguous property Owner unless done by a Homeowners' Association.

127.35 (C)(2) *Construction, Maintenance Requirements*. The following shall be minimum standards for construction and maintenance of Swale areas:

127.35 (C)(2)(a) Paved Swales are prohibited except in commercially or industrially zoned areas wherein the property Owner may pave the Swale area, provided that prior to paving, a permit is obtained from the City and the property Owner has provided for subsurface drainage or other facilities to drain the adjacent land without runoff onto the lands of other property Owners or onto the Public Right-Of-Way.

127.35 (C)(2)(b) The use and installation of any type of impervious paving, limerock, or stabilizing material within the Swale area is prohibited.

127.35 (C)(2)(c) Bottom of Swales, measured from top of turf, shall be at least 9 inches below the edge of road pavement.

127.35 (C)(2)(d) Paved areas on Private Property shall not be permitted to drain on the Public Right-Of-Way.

127.35 (C)(2)(e) Concrete catch basin aprons may be installed in the area surrounding the catch basin where, in the judgment of the City Engineer, such installation will not adversely affect the drainage or percolation of the Swale in the vicinity. For each instance where a concrete catch basin apron requested by the property Owner and approved by the City Engineer, an authorization permit shall be issued by the City Engineer.

127.35 (C)(2)(f) Concrete valley gutters or curb, and gutters shall be required in the Roadway Swale areas where the longitudinal slopes for the Roadway pavement is less than the 0.5% or where the clear width of the Roadway Swale between the edge of Roadway pavement and the Sidewalk is less than eight feet.

§127.36 TRAFFIC CALMING DEVICES:

127.36 (A) An engineering permit may only be issued for the installation of speed humps provided the following criteria are met:

127.36 (A)(1) Installation requires 67% (minimum). Approval by affected property Owners, which approval shall be obtained by the utilization of a standard petition form provided by the City. The "affected property Owners" for installations within a privately maintained community or subdivision shall be defined as the entire membership of the

Homeowners' Association. The "affected property Owners" for installations on a public Cul-de-Sac or no-outlet condition Roadway shall be all homeowners with lots having direct access onto the subject Roadway. The "affected property Owners" for installations on a public through Street shall be defined as all homeowners located within a half mile band width perpendicular to the centerline of the Roadway extending a half mile along the Roadway in each direction from the proposed installation.

127.36 (A)(1)(a) Speed humps may only be installed on Roadways classified as Local Streets with an average daily Traffic count not to exceed 2,000 average daily trips.

127.36 (A)(1)(b) A Traffic study performed by a licensed Traffic Engineer that demonstrates a minimum measured 85th percentile speed of ten miles per hour greater than the posted speed limit on the subject Roadway shall be submitted by the Applicant.

§127.37 STANDARD ROADWAY DETAILS

Detail No.	Description
R-1	Residential Street Two-Lane (Undivided)
R-2	Arterial Road Multi-Lane
R-3	Cul-De-Sac for Residential Streets
R-4	Fire Lane Requirements
R-5	Driveways
R-6	Driveway Spacing, Residential
R-7	Driveway Spacing, Commercial and Industrial
R-8	Parking Area, Inverted Crown Section
R-9	Typical Concrete Curb & Gutter Sections
R-10	Sidewalk Joint Details & Typical Construction
R-11&12	Typical Street Sign Assembly
R-13	Handicapped Sign Detail
R-14	Procedure for Restoration of Flexible Pavement
R-15	Roadway Cut Restoration for Utility Perpendicular Crossing
R-16	Pavement Restoration Longitudinal
R-17	Trench Detail Unpaved Areas
R-18	Multiple Pipe or Ducts (4″ Diameter or Smaller)
R-19	Standard Brick Pavers Detail
R-20	Standard Mast Arm Assembly
R-20A&B	Standard Mast Arm Notes
R-21	Minimum Clearance Between Road and Waterway
R-22	Speed Table Signing and Pavement Marking Detail
R-22A	Speed Table Signing and Pavement Marking Detail
R-23	Roundabout Detail (Plan View with Signage)
R-23A	Roundabout Detail (Striping)
R-23B	Roundabout Detail (Sections)

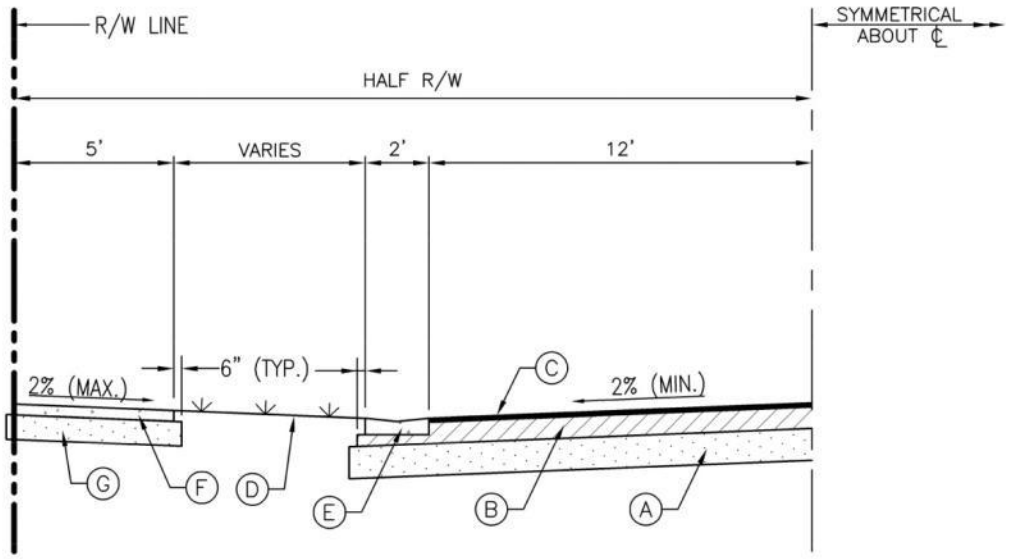

(A) 12" STABILIZED SUBGRADE, COMPACTED AT 98% MAXIMUM DENSITY PER FLORIDA METHOD OF TEST (Designation: FM1 T-180).

(B) 8" LIMEROCK BASE, PLACED IN TWO EQUAL LIFTS, MIN. LBR 100, MIN. PERCENTAGE OF CARBONATES OF CALCIUM AND MAGNESSIUM OF 70%, COMPACTED AT 98% MAXIMUM DENSITY PER FLORIDA METHOD OF TEST (Designation: FM1 T-180).

(C) 2" ASPHALT SURFACE COURSE, FDOT TYPE SP-9.5 IN TWO 1" LIFTS

(D) SOD OR GRASS MULCH, SOIL GRADING SHALL BE 2" BELOW TOP OF SIDEWALK AND TOP OF CURB.

(E) 2' VALLEY GUTTER OR TYPE F CURB AND GUTTER, ASPHALT PAVEMENT SHALL BE ¼" ABOVE THE LIP OF THE GUTTER (SEE TYPICAL CONCRETE CURB & GUTTER SECTIONS)

(F) 4" CONCRETE SIDEWALK, PLAIN CONCRETE. 6" (REINFORCED WITH 6"x6" #10/10 WELDED WIRE MESH) FOR SIDEWALKS ON DRIVEWAYS ONLY.

(G) LIMEROCK BASE COURSE (4" THICK MIN.)

STANDARD ENGINEERING DETAILS & SPECIFICATIONS

RESIDENTIAL STREETS TWO-LANE (UNDIVIDED)

CITY OF WESTON, FLORIDA PUBLIC WORKS AND UTILITIES 2599 SOUTH POST ROAD, WESTON, FL 33327 TELEPHONE: 954-385-2600 FAX: 954-385-2610	DATE	SCALE	DRAWING NO.
	Feb. 2010	N.T.S.	R-1

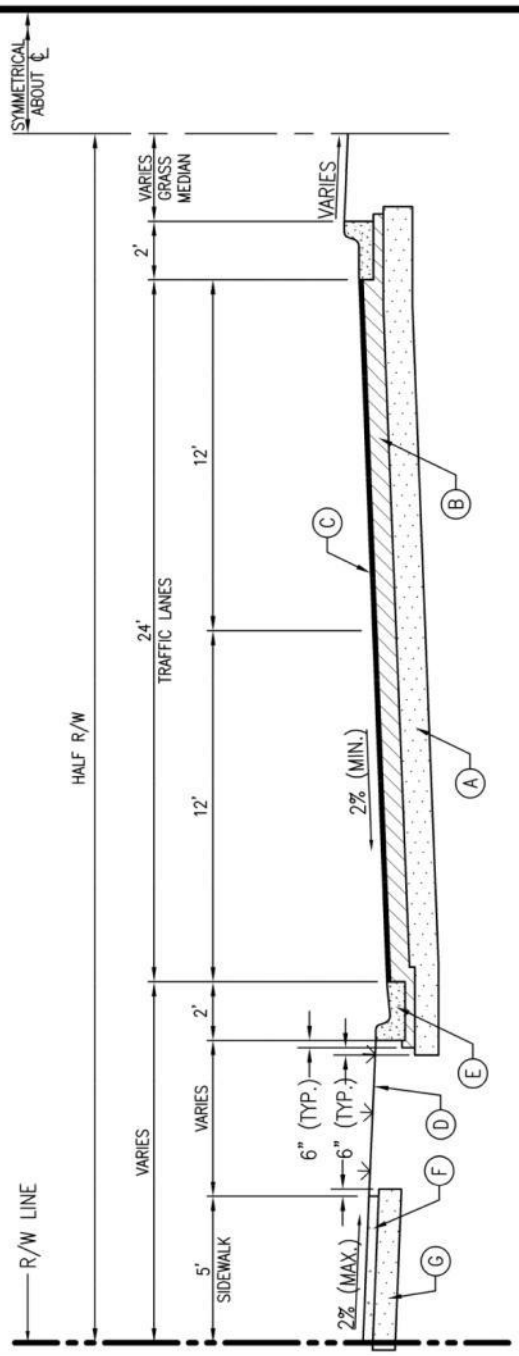

Ⓐ 12" STABILIZED SUBGRADE, COMPACTED AT 98% MAXIMUM DENSITY PER FLORIDA METHOD OF TEST (Designation: FM1 T-180).

Ⓑ 8" LIMEROCK BASE, PLACED IN TWO EQUAL LIFTS, MIN. LBR 100, MIN. PERCENTAGE OF CARBONATES OF CALCIUM AND MAGNESSIUM OF 70%, COMPACTED AT 98% MAXIMUM DENSITY PER FLORIDA METHOD OF TEST (Designation: FM1 T-180).

Ⓒ 2" ASPHALT SURFACE COURSE, FDOT TYPE SP-9.5 IN TWO 1" LIFTS

Ⓓ SOD OR GRASS MULCH, SOIL GRADING SHALL BE 2" BELOW TOP OF SIDEWALK AND TOP OF CURB.

Ⓔ 2' VALLEY GUTTER OR TYPE F CURB AND GUTTER, ASPHALT PAVEMENT SHALL BE ¼" ABOVE THE LIP OF THE GUTTER (SEE TYPICAL CONCRETE CURB & GUTTER SECTIONS)

Ⓕ 4" CONCRETE SIDEWALK, PLAIN CONCRETE. 6" (REINFORCED WITH 6"x6" #1⁰⁄₁₀ WELDED WIRE MESH) FOR SIDEWALKS ON DRIVEWAYS ONLY.

Ⓖ LIMEROCK BASE COURSE (4" THICK MIN.)

STANDARD ENGINEERING DETAILS & SPECIFICATIONS

ARTERIAL ROAD MULTI-LANE

CITY OF WESTON, FLORIDA PUBLIC WORKS AND UTILITIES 2599 SOUTH POST ROAD, WESTON, FL 33327 TELEPHONE: 954-385-2600 FAX: 954-385-2610	DATE	SCALE	DRAWING NO.
	Feb. 2010	N.T.S.	R-2

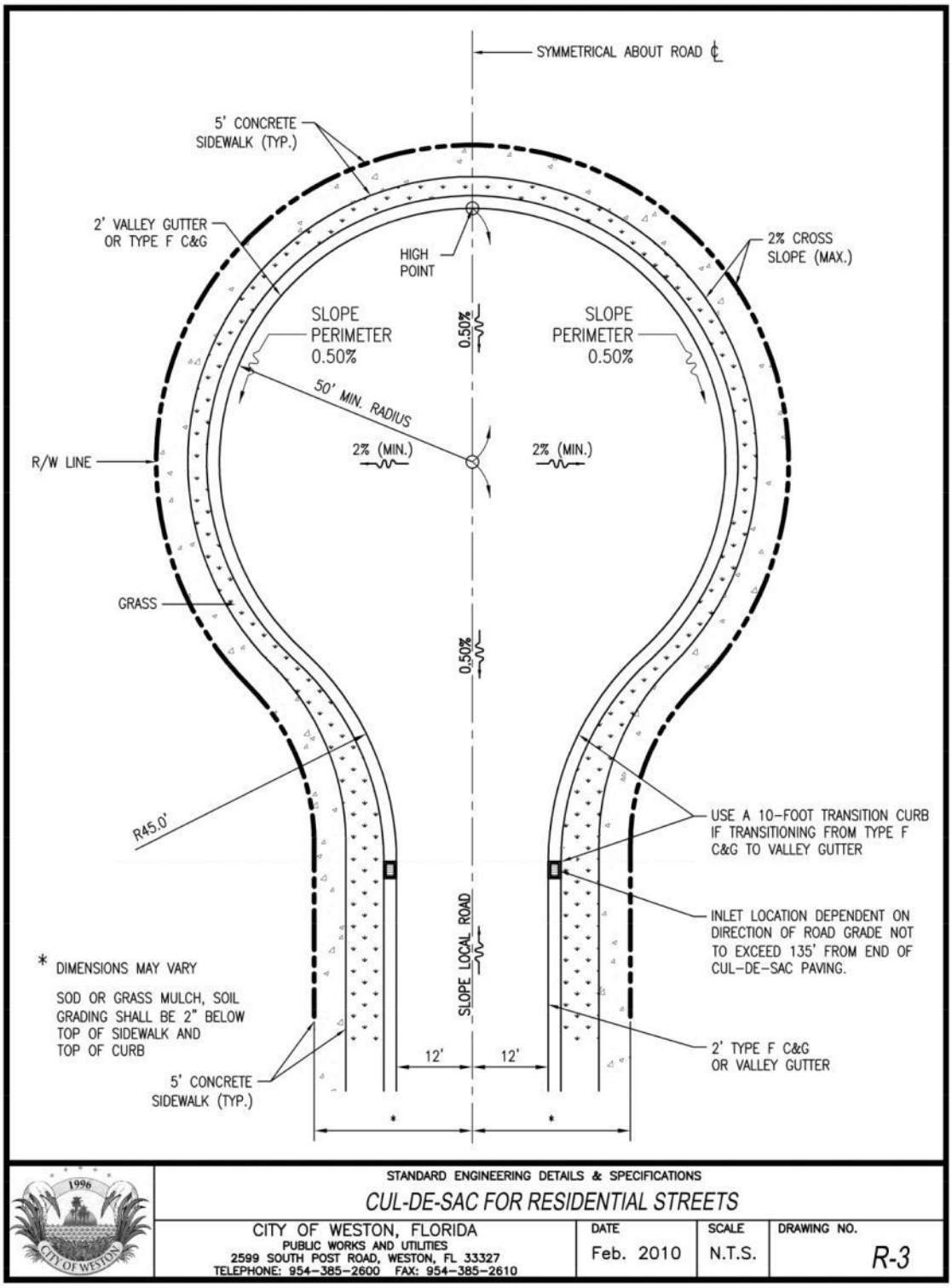
SYMMETRICAL ABOUT ROAD ℄
5' CONCRETE SIDEWALK (TYP.)
2' VALLEY GUTTER OR TYPE F C&G
HIGH POINT
2% CROSS SLOPE (MAX.)
SLOPE PERIMETER 0.50%
0.50%
SLOPE PERIMETER 0.50%
50' MIN. RADIUS
2% (MIN.)
2% (MIN.)
R/W LINE
GRASS
0.50%
R45.0'
USE A 10-FOOT TRANSITION CURB IF TRANSITIONING FROM TYPE F C&G TO VALLEY GUTTER
INLET LOCATION DEPENDENT ON DIRECTION OF ROAD GRADE NOT TO EXCEED 135' FROM END OF CUL-DE-SAC PAVING.
SLOPE LOCAL ROAD
* DIMENSIONS MAY VARY
SOD OR GRASS MULCH, SOIL GRADING SHALL BE 2" BELOW TOP OF SIDEWALK AND TOP OF CURB
12'
12'
2' TYPE F C&G OR VALLEY GUTTER
5' CONCRETE SIDEWALK (TYP.)
*
*
STANDARD ENGINEERING DETAILS & SPECIFICATIONS
CUL-DE-SAC FOR RESIDENTIAL STREETS
CITY OF WESTON, FLORIDA
PUBLIC WORKS AND UTILITIES
2599 SOUTH POST ROAD, WESTON, FL 33327
TELEPHONE: 954-385-2600 FAX: 954-385-2610
DATE
Feb. 2010
SCALE
N.T.S.
DRAWING NO.
R-3

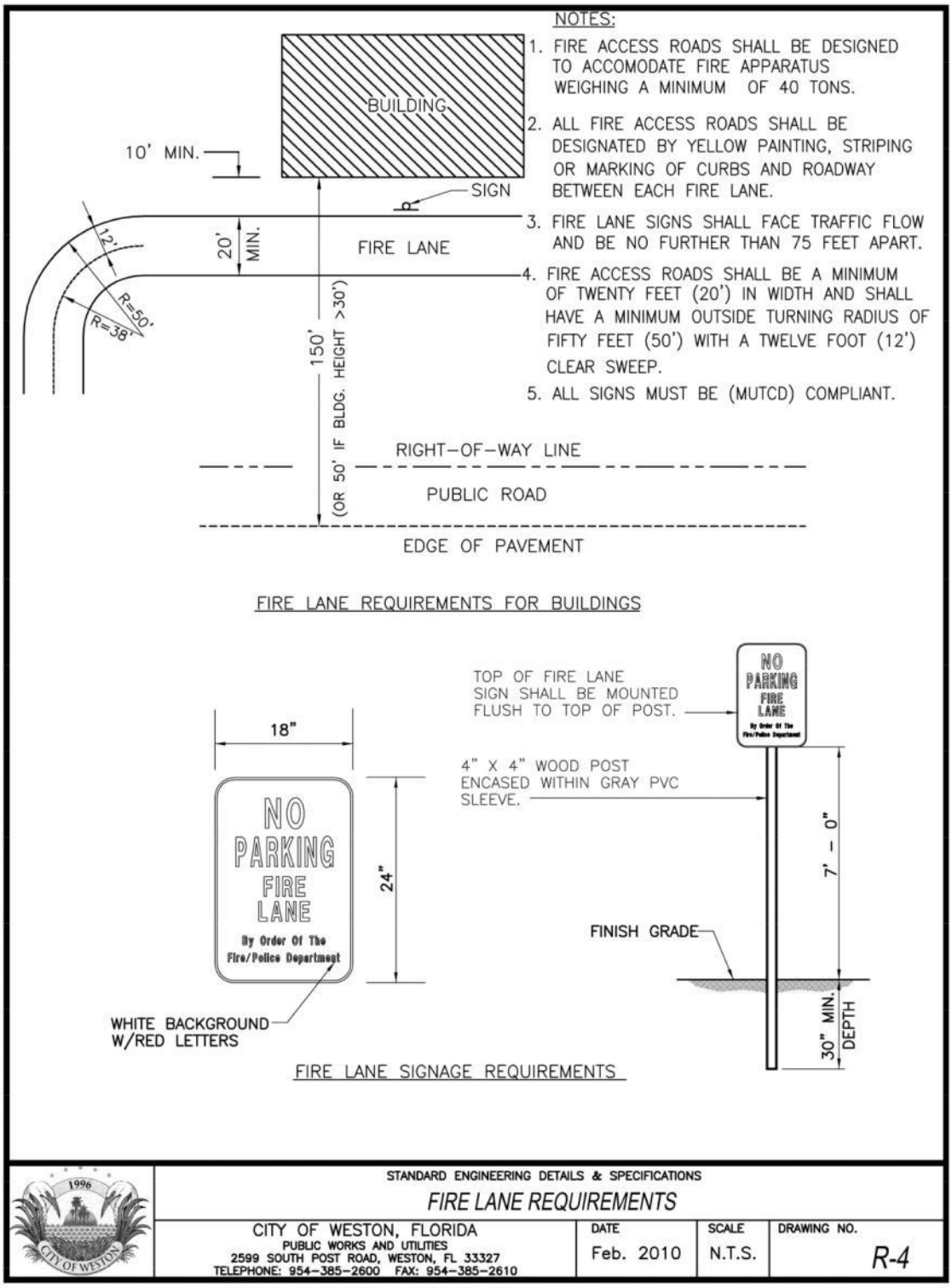
NOTES:
1. FIRE ACCESS ROADS SHALL BE DESIGNED TO ACCOMODATE FIRE APPARATUS WEIGHING A MINIMUM OF 40 TONS.
2. ALL FIRE ACCESS ROADS SHALL BE DESIGNATED BY YELLOW PAINTING, STRIPING OR MARKING OF CURBS AND ROADWAY BETWEEN EACH FIRE LANE.
3. FIRE LANE SIGNS SHALL FACE TRAFFIC FLOW AND BE NO FURTHER THAN 75 FEET APART.
4. FIRE ACCESS ROADS SHALL BE A MINIMUM OF TWENTY FEET (20') IN WIDTH AND SHALL HAVE A MINIMUM OUTSIDE TURNING RADIUS OF FIFTY FEET (50') WITH A TWELVE FOOT (12') CLEAR SWEEP.
5. ALL SIGNS MUST BE (MUTCD) COMPLIANT.
BUILDING
10' MIN.
SIGN
20' MIN.
FIRE LANE
12'
R=50'
R=38'
150'
(OR 50' IF BLDG. HEIGHT >30')
RIGHT-OF-WAY LINE
PUBLIC ROAD
EDGE OF PAVEMENT
FIRE LANE REQUIREMENTS FOR BUILDINGS
18"
24"
NO PARKING FIRE LANE
By Order Of The Fire/Police Department
WHITE BACKGROUND W/RED LETTERS
TOP OF FIRE LANE SIGN SHALL BE MOUNTED FLUSH TO TOP OF POST.
4" X 4" WOOD POST ENCASED WITHIN GRAY PVC SLEEVE.
7' - 0"
FINISH GRADE
30" MIN. DEPTH
FIRE LANE SIGNAGE REQUIREMENTS
STANDARD ENGINEERING DETAILS & SPECIFICATIONS
FIRE LANE REQUIREMENTS
CITY OF WESTON, FLORIDA
PUBLIC WORKS AND UTILITIES
2599 SOUTH POST ROAD, WESTON, FL 33327
TELEPHONE: 954-385-2600 FAX: 954-385-2610
DATE
Feb. 2010
SCALE
N.T.S.
DRAWING NO.
R-4

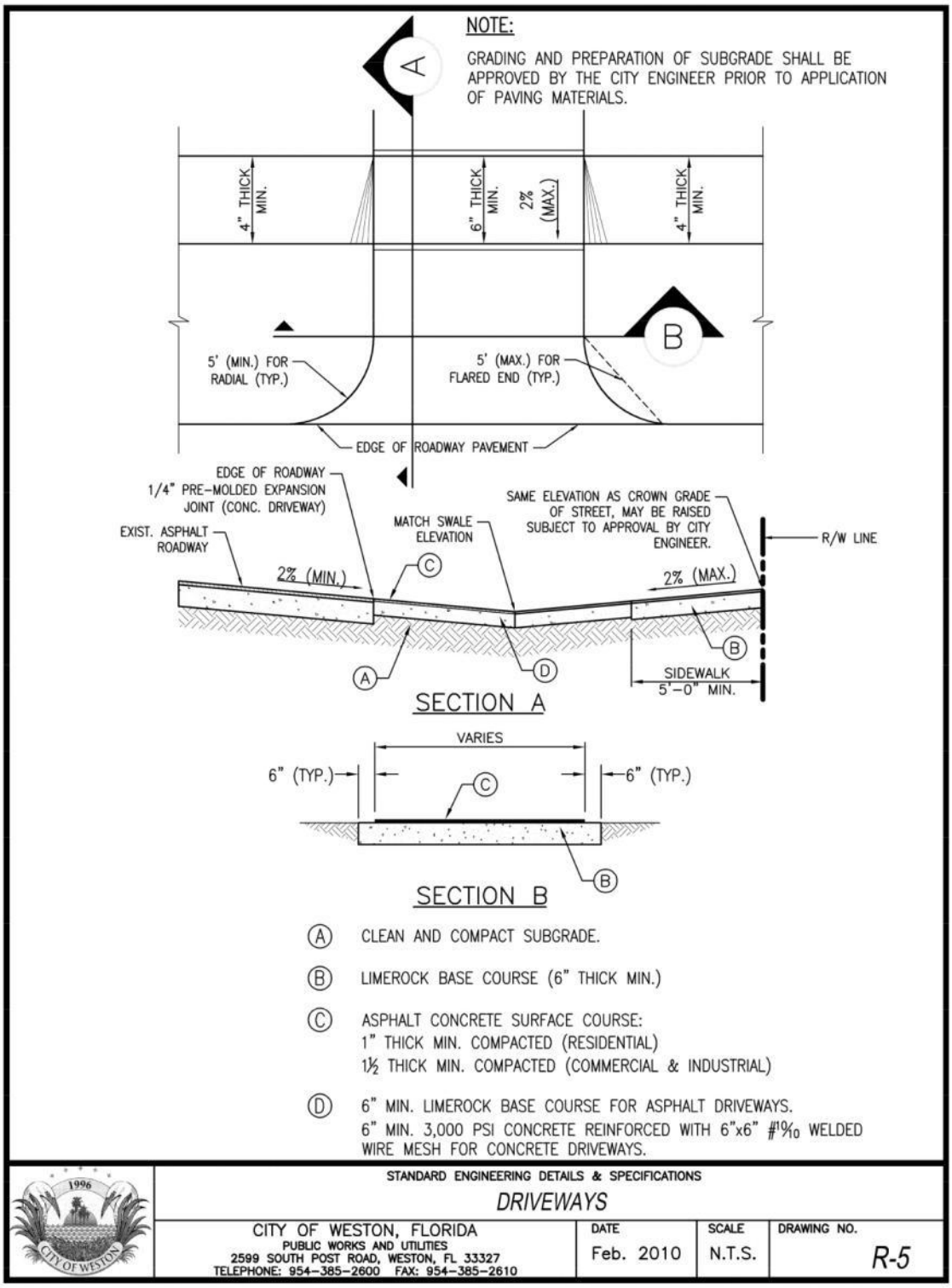
NOTE:
GRADING AND PREPARATION OF SUBGRADE SHALL BE APPROVED BY THE CITY ENGINEER PRIOR TO APPLICATION OF PAVING MATERIALS.
A
4" THICK MIN.
6" THICK MIN.
2% (MAX.)
4" THICK MIN.
B
5' (MIN.) FOR RADIAL (TYP.)
5' (MAX.) FOR FLARED END (TYP.)
EDGE OF ROADWAY PAVEMENT
EDGE OF ROADWAY
1/4" PRE-MOLDED EXPANSION JOINT (CONC. DRIVEWAY)
EXIST. ASPHALT ROADWAY
MATCH SWALE ELEVATION
SAME ELEVATION AS CROWN GRADE OF STREET, MAY BE RAISED SUBJECT TO APPROVAL BY CITY ENGINEER.
R/W LINE
2% (MIN.)
2% (MAX.)
C
A
D
B
SIDEWALK 5'-0" MIN.
SECTION A
VARIES
6" (TYP.)
6" (TYP.)
C
B
SECTION B
A CLEAN AND COMPACT SUBGRADE.
B LIMEROCK BASE COURSE (6" THICK MIN.)
C ASPHALT CONCRETE SURFACE COURSE:
1" THICK MIN. COMPACTED (RESIDENTIAL)
1½ THICK MIN. COMPACTED (COMMERCIAL & INDUSTRIAL)
D 6" MIN. LIMEROCK BASE COURSE FOR ASPHALT DRIVEWAYS.
6" MIN. 3,000 PSI CONCRETE REINFORCED WITH 6"x6" #10/10 WELDED WIRE MESH FOR CONCRETE DRIVEWAYS.
1996
CITY OF WESTON
STANDARD ENGINEERING DETAILS & SPECIFICATIONS
DRIVEWAYS
CITY OF WESTON, FLORIDA
PUBLIC WORKS AND UTILITIES
2599 SOUTH POST ROAD, WESTON, FL 33327
TELEPHONE: 954-385-2600 FAX: 954-385-2610
DATE
Feb. 2010
SCALE
N.T.S.
DRAWING NO.
R-5

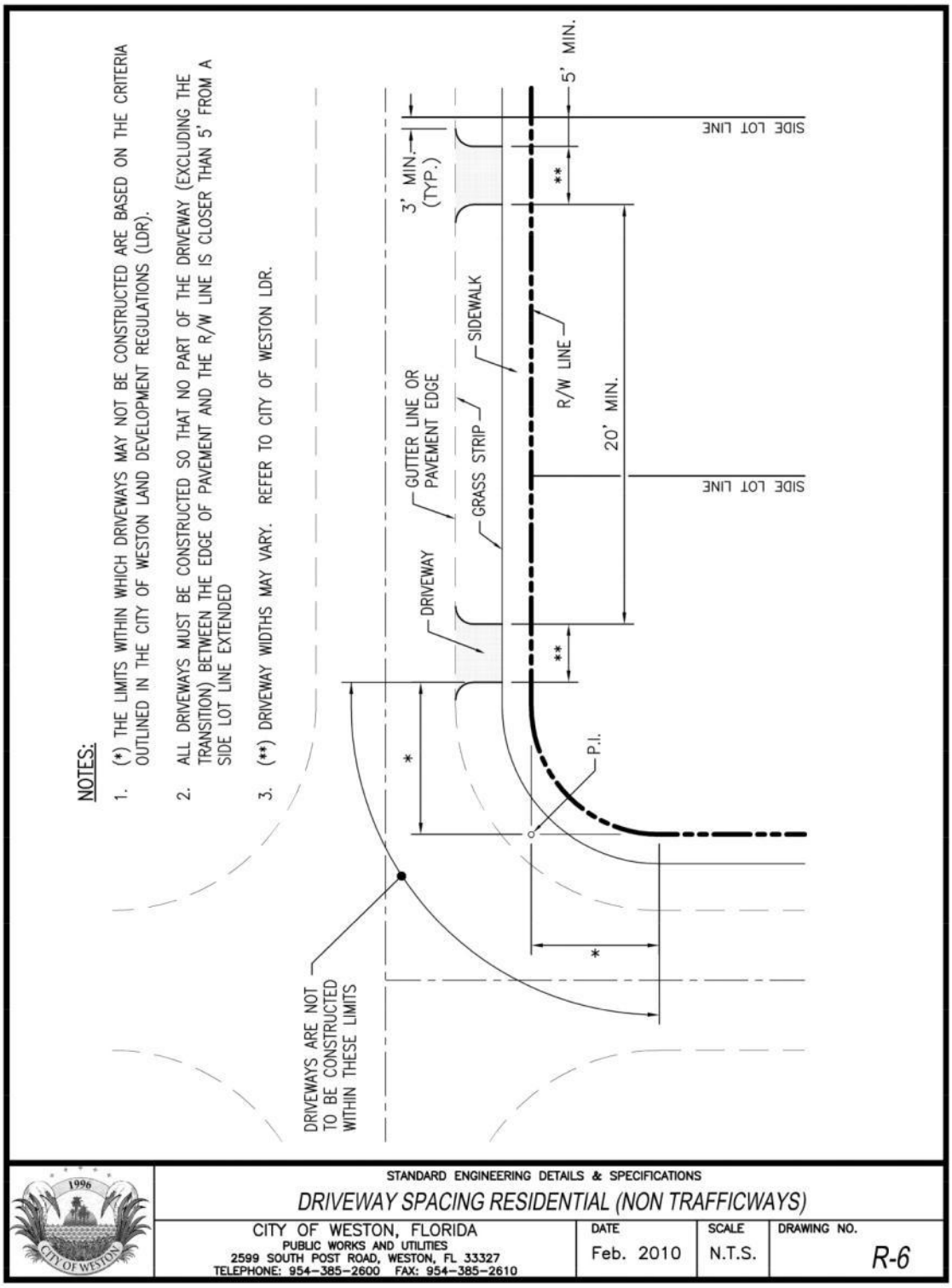
NOTES:
1. (*) THE LIMITS WITHIN WHICH DRIVEWAYS MAY NOT BE CONSTRUCTED ARE BASED ON THE CRITERIA OUTLINED IN THE CITY OF WESTON LAND DEVELOPMENT REGULATIONS (LDR).
2. ALL DRIVEWAYS MUST BE CONSTRUCTED SO THAT NO PART OF THE DRIVEWAY (EXCLUDING THE TRANSITION) BETWEEN THE EDGE OF PAVEMENT AND THE R/W LINE IS CLOSER THAN 5' FROM A SIDE LOT LINE EXTENDED
3. (**) DRIVEWAY WIDTHS MAY VARY. REFER TO CITY OF WESTON LDR.
DRIVEWAYS ARE NOT TO BE CONSTRUCTED WITHIN THESE LIMITS
DRIVEWAY
GUTTER LINE OR PAVEMENT EDGE
GRASS STRIP
SIDEWALK
3' MIN. (TYP.)
5' MIN.
SIDE LOT LINE
R/W LINE
20' MIN.
P.I.
*
**
STANDARD ENGINEERING DETAILS & SPECIFICATIONS
DRIVEWAY SPACING RESIDENTIAL (NON TRAFFICWAYS)
CITY OF WESTON, FLORIDA
PUBLIC WORKS AND UTILITIES
2599 SOUTH POST ROAD, WESTON, FL 33327
TELEPHONE: 954-385-2600 FAX: 954-385-2610
DATE
Feb. 2010
SCALE
N.T.S.
DRAWING NO.
R-6

NOTES:

1. (*) THE LIMITS WITHIN WHICH DRIVEWAYS MAY NOT BE CONSTRUCTED ARE BASED ON THE CRITERIA OUTLINED IN THE CITY OF WESTON LAND DEVELOPMENT REGULATIONS (LDR).
2. ALL DRIVEWAYS MUST BE CONSTRUCTED SO THAT NO PART OF THE DRIVEWAY (EXCLUDING THE TRANSITION) BETWEEN THE EDGE OF PAVEMENT AND THE R/W LINE IS CLOSER THAN 5' FROM A SIDE LOT LINE EXTENDED
3. (**) DRIVEWAY WIDTHS MAY VARY. REFER TO CITY OF WESTON LDR.
4. SURVEYS MUST BE PROVIDED SHOWING THE ALIGNMENT OF PROPOSED DRIVEWAY WITH EXISTING DRIVEWAYS LOCATED ON THE OPPOSITE SIDE OF THE RIGHT-OF-WAY.
5. WHERE TWO OR MORE DRIVEWAYS ARE CONSTRUCTED TO PROVIDE ACCESS TO THE SAME PRIVATE PROPERTY, A GRASS STRIP OF 20' MINIMUM LENGTH SHALL BE PROVIDED BETWEEN THE DRIVEWAYS.

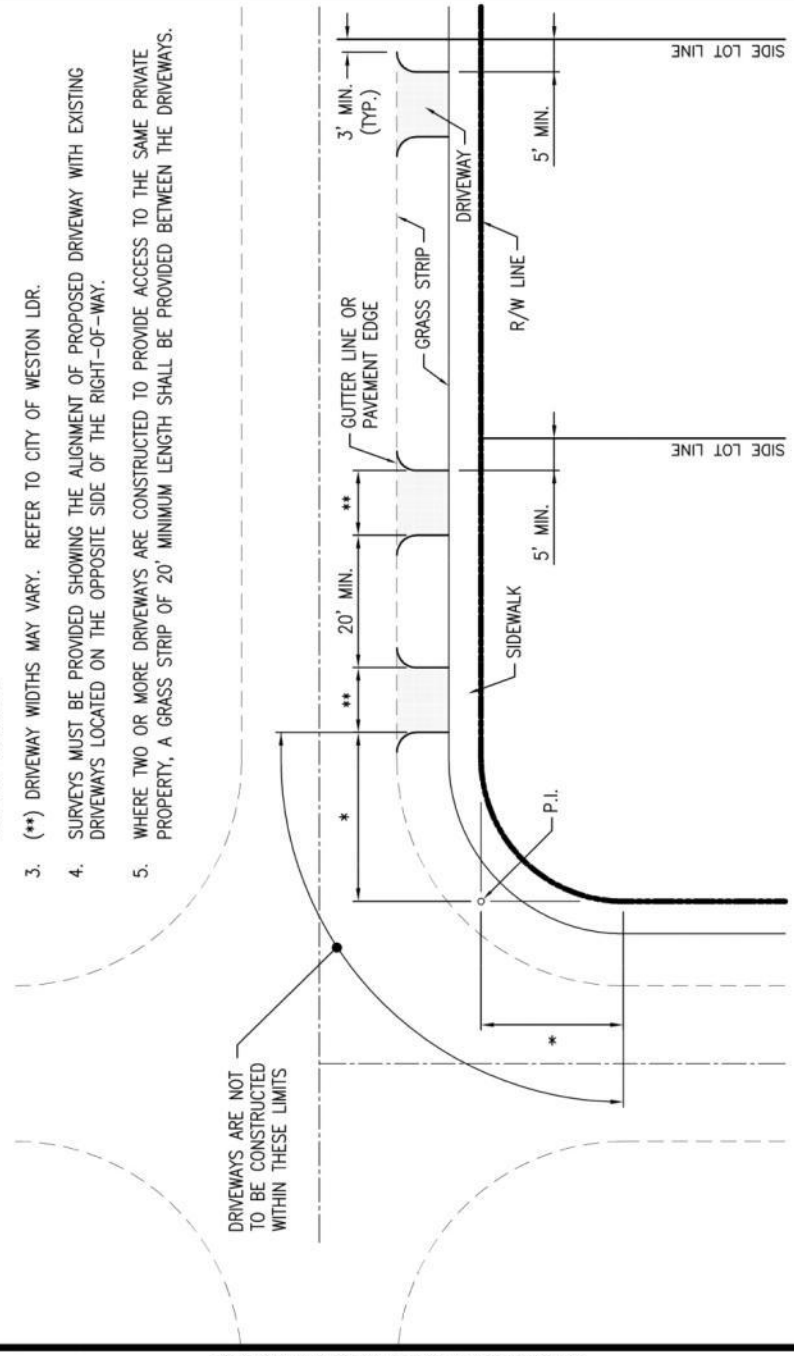

STANDARD ENGINEERING DETAILS & SPECIFICATIONS

DRIVEWAY SPACING COMMERCIAL & INDUSTRIAL (NON TRAFFICWAYS)

CITY OF WESTON, FLORIDA PUBLIC WORKS AND UTILITIES 2599 SOUTH POST ROAD, WESTON, FL 33327 TELEPHONE: 954-385-2600 FAX: 954-385-2610	DATE	SCALE	DRAWING NO.
	Feb. 2010	N.T.S.	R-7

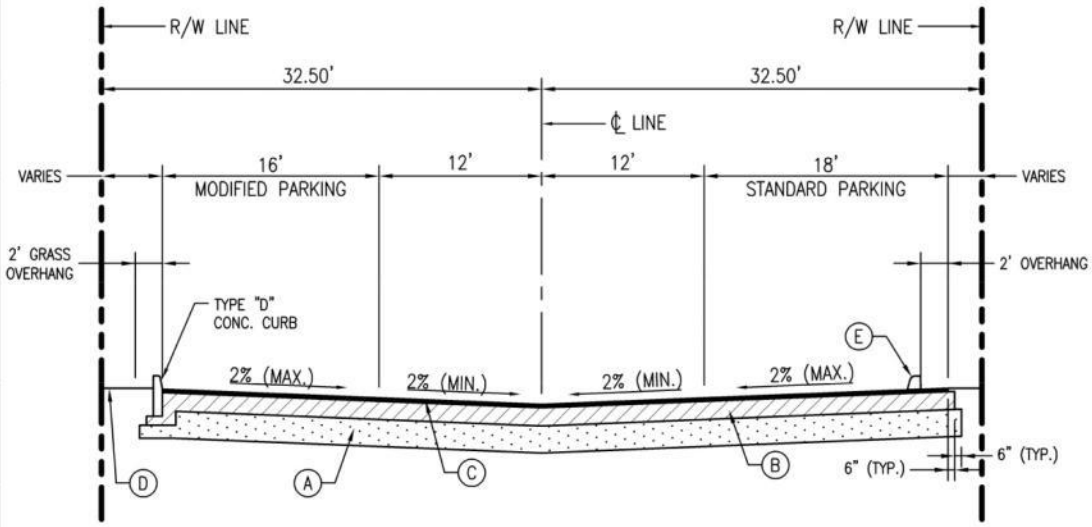

(A) 12" STABILIZED SUBGRADE, COMPACTED AT 98% MAXIMUM DENSITY PER FLORIDA METHOD OF TEST (Designation: FM1 T-180).

(B) 8" LIMEROCK BASE, PLACED IN TWO EQUAL LIFTS, MIN. LBR 100, MIN. PERCENTAGE OF CARBONATES OF CALCIUM AND MAGNESSIUM OF 70%, COMPACTED AT 98% MAXIMUM DENSITY PER FLORIDA METHOD OF TEST (Designation: FM1 T-180).

(C) 2" ASPHALT SURFACE COURSE, FDOT TYPE SP-9.5 IN TWO 1" LIFTS

(D) SOD OR GRASS MULCH, SOIL GRADING SHALL BE 2" BELOW TOP OF CURB.

(E) CONCRETE WHEELSTOP

NOTE:

1. MINIMUM PROFILE GRADE TO BE 2%. INVERTED CROWN TO BE INCORPORATED WITH PROPER DRAINAGE SYSTEM AND TO BE APPROVED BY THE CITY ENGINEER.

2. ALL PAVEMENT MARKINGS SHALL BE 6" SOLID WHITE LINE (TYP.)

3. REFER TO LAND DEVELOPMENT REGULATIONS AND LANDSCAPE CODE FOR DETAILS

	STANDARD ENGINEERING DETAILS & SPECIFICATIONS *PARKING AREA INVERTED CROWN SECTION*			
	CITY OF WESTON, FLORIDA PUBLIC WORKS AND UTILITIES 2599 SOUTH POST ROAD, WESTON, FL 33327 TELEPHONE: 954-385-2600 FAX: 954-385-2610	DATE Feb. 2010	SCALE N.T.S.	DRAWING NO. *R-8*

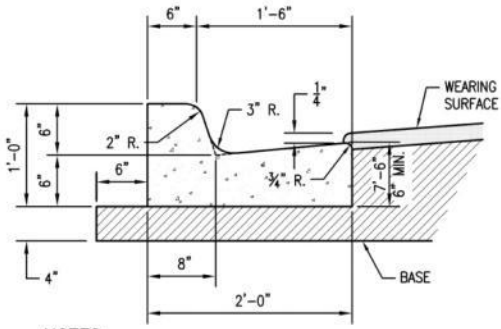

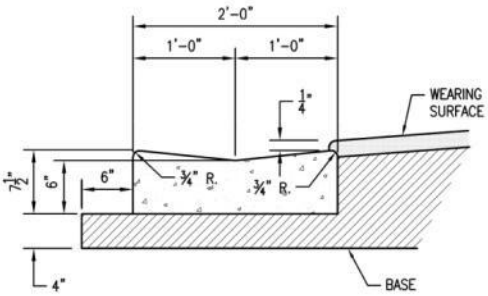

VALLEY GUTTER/DROP CURB

NOTES:

1. WHEN USED ON HIGH SIDE OF ROADWAYS, CROSS SLOPE OF THE GUTTER SHALL MATCH THE CROSS SLOPE OF THE ADJACENT PAVEMENT AND THE THICKNESS OF THE LIP SHALL BE 6".

2. SAWCUTS REQUIRED AT 10' CENTERS.

TYPE 'F' CURB & GUTTER DETAIL

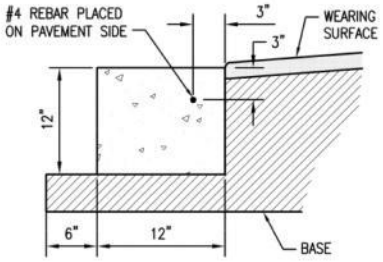

FLUSH HEADER CURB

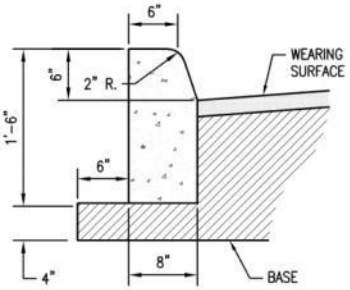

TYPE 'D' CURB

NOTES:

1. ROADWAY SUBGRADE SHALL IN ALL CASES EXTEND BELOW CURBING.

2. SAWCUTS AT 10' CENTERS SHALL BE MADE WITHIN 24 HOURS OF CONCRETE PLACEMENT.

STANDARD ENGINEERING DETAILS & SPECIFICATIONS

TYPICAL CONCRETE CURB & GUTTER SECTIONS

CITY OF WESTON, FLORIDA PUBLIC WORKS AND UTILITIES 2599 SOUTH POST ROAD, WESTON, FL 33327 TELEPHONE: 954-385-2600 FAX: 954-385-2610	DATE	SCALE	DRAWING NO.
	Feb. 2010	N.T.S.	R-9

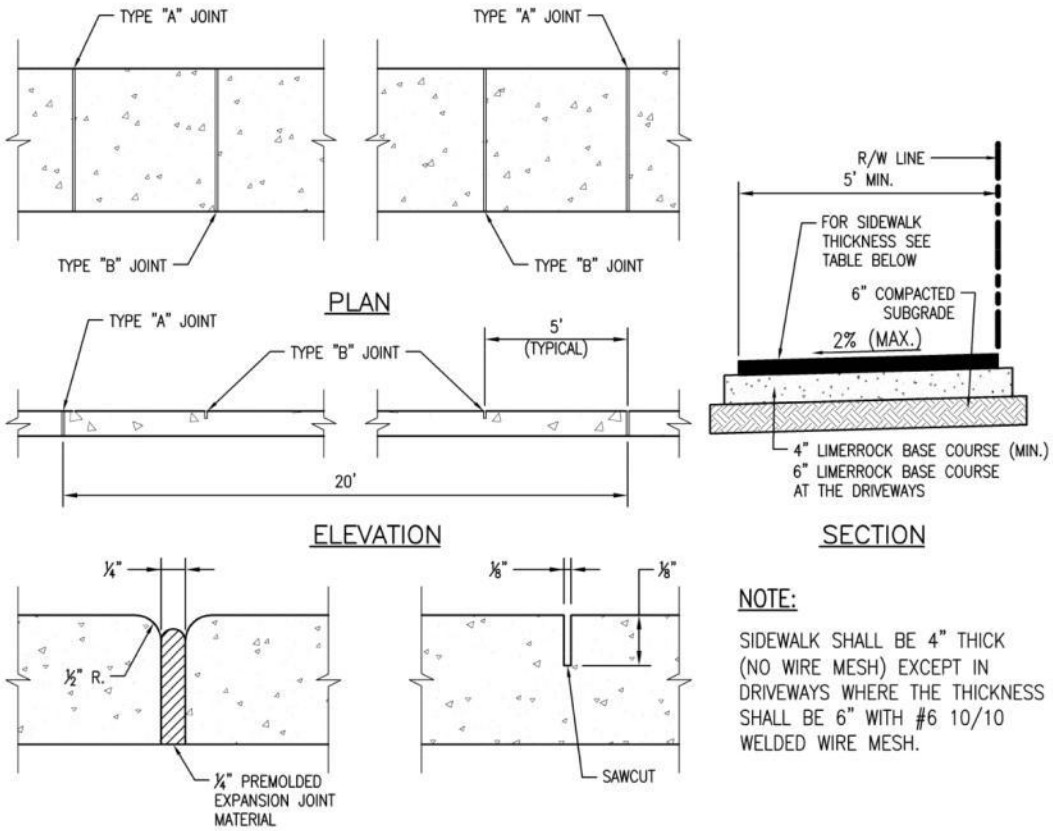

NOTE:

SIDEWALK SHALL BE 4" THICK (NO WIRE MESH) EXCEPT IN DRIVEWAYS WHERE THE THICKNESS SHALL BE 6" WITH #6 10/10 WELDED WIRE MESH.

SIDEWALK JOINTS

SIDEWALK THICKNESS	
RESIDENTIAL AREAS	4" (MIN.)
AT DRIVEWAYS AND OTHER AREAS	6" (MIN.)
SIDEWALK WIDTHS	
SINGLE – FAMILY AREAS	5'
MULTI – FAMILY AREAS	5'
OTHER AREAS AS SPECIFIED BY THE CITY ENGINEER.	

SIDEWALK JOINTS	
TYPE	LOCATION
"A"	20'–0" CENTER TO CENTER P.C. AND P.T. OF CURVES. JUNCTION OF EXISTING AND NEW SIDEWALKS. * WHERE SIDEWALK ABUTS CONCRETE CURBS, DRIVEWAYS, AND SIMILAR STRUCTURES.
"B"	5'–0" CENTER TO CENTER ON SIDEWALKS.

*AT THE DISCRETION OF THE ENGINEER.

STANDARD ENGINEERING DETAILS & SPECIFICATIONS

SIDEWALK JOINT DETAILS & TYPICAL CONSTRUCTION

CITY OF WESTON, FLORIDA
PUBLIC WORKS AND UTILITIES
2599 SOUTH POST ROAD, WESTON, FL 33327
TELEPHONE: 954–385–2600 FAX: 954–385–2610

DATE	SCALE	DRAWING NO.
Feb. 2010	N.T.S.	R-10

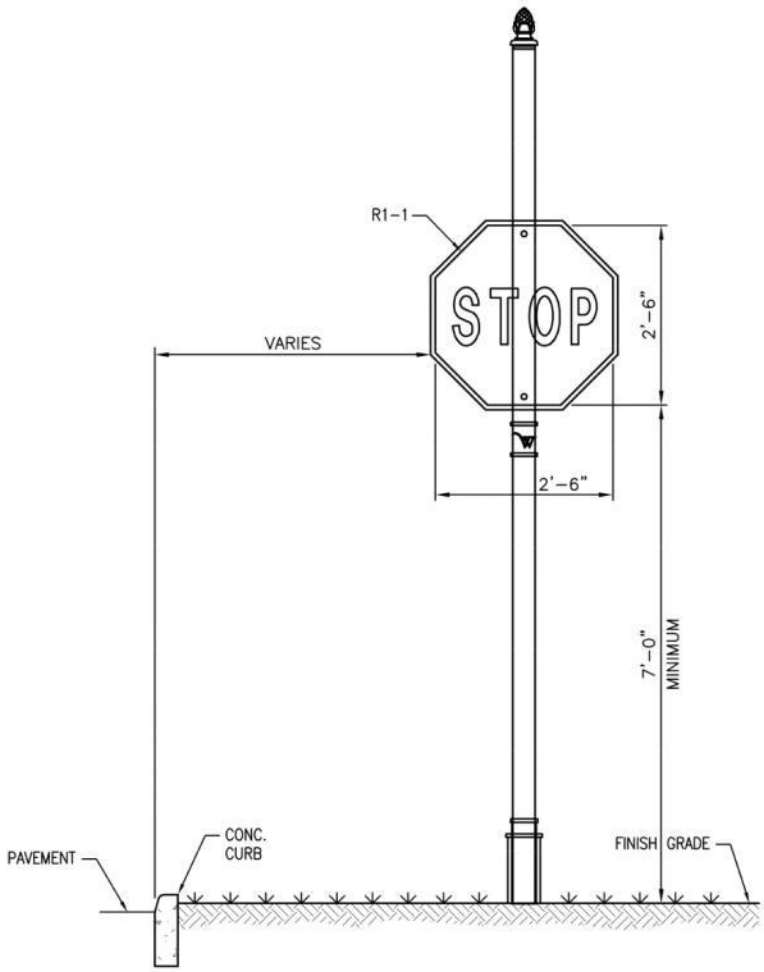

NOTES:

1. ALL SIGNS TO CONSIST OF HIGH INTENSITY REFLECTIVE MATERIALS.
2. INSTALLATION MUST MAINTAIN SIZE, SHAPE AND COLOR OF STANDARD M.U.T.C.D. SIGN. ALL SIGNS TO BE INSTALLED IN CONFORMANCE WITH THE M.U.T.C.D. AND ALL APPLICABLE BROWARD COUNTY AND F.D.O.T. STANDARDS.
3. SOMEWHAT DIFFERENT AESTHETIC INSTALLATIONS MAY BE IMPLEMENTED SUBJECT CITY APPROVAL.

	STANDARD ENGINEERING DETAILS & SPECIFICATIONS *TYPICAL STREET SIGN ASSEMBLY*			
	CITY OF WESTON, FLORIDA PUBLIC WORKS AND UTILITIES 2599 SOUTH POST ROAD, WESTON, FL 33327 TELEPHONE: 954-385-2600 FAX: 954-385-2610	DATE Feb. 2010	SCALE N.T.S.	DRAWING NO. *R-11*

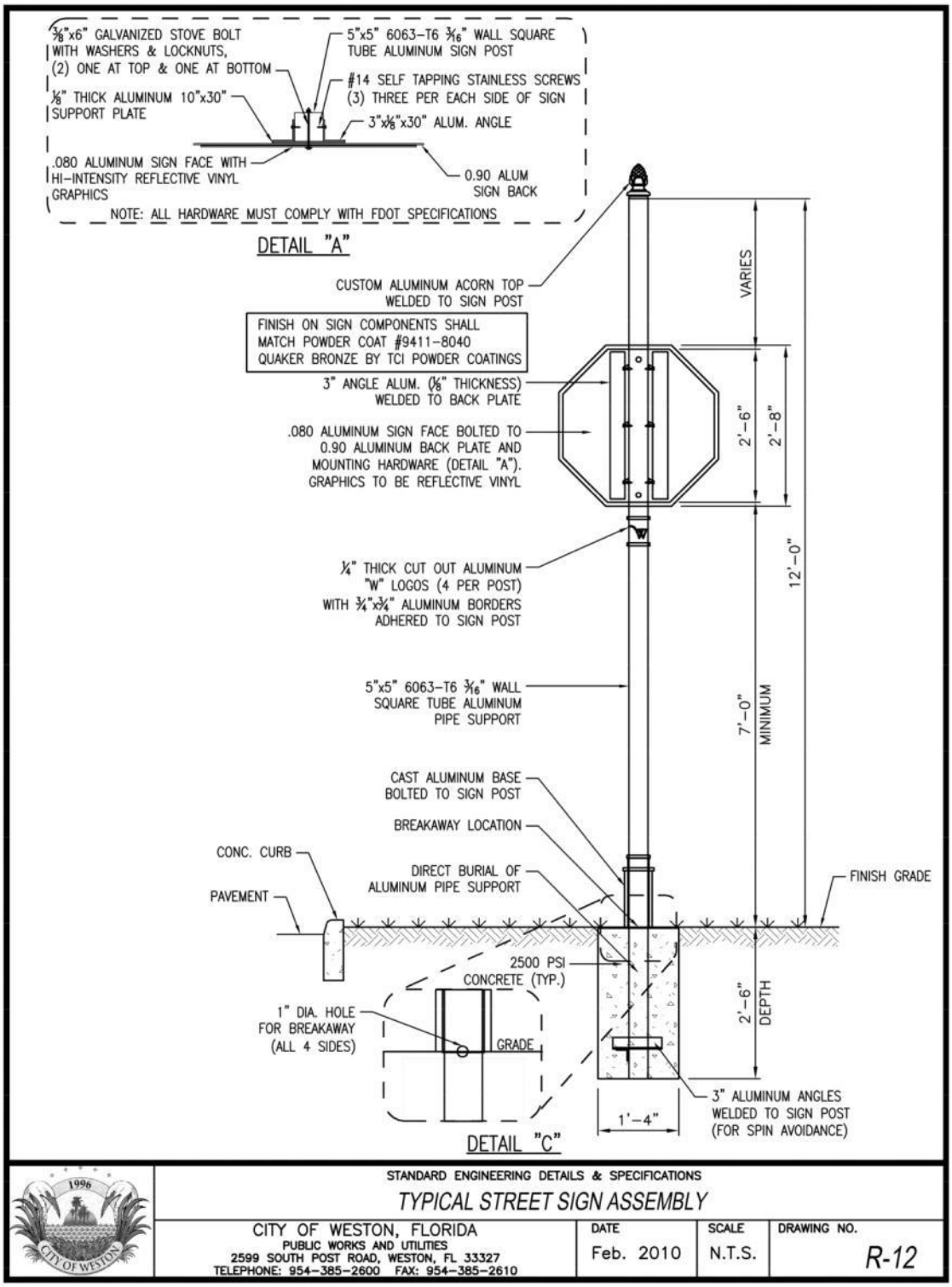
3/8"x6" GALVANIZED STOVE BOLT WITH WASHERS & LOCKNUTS, (2) ONE AT TOP & ONE AT BOTTOM
1/8" THICK ALUMINUM 10"x30" SUPPORT PLATE
5"x5" 6063-T6 3/16" WALL SQUARE TUBE ALUMINUM SIGN POST
#14 SELF TAPPING STAINLESS SCREWS (3) THREE PER EACH SIDE OF SIGN
3"x1/8"x30" ALUM. ANGLE
.080 ALUMINUM SIGN FACE WITH HI-INTENSITY REFLECTIVE VINYL GRAPHICS
0.90 ALUM SIGN BACK
NOTE: ALL HARDWARE MUST COMPLY WITH FDOT SPECIFICATIONS
DETAIL "A"
CUSTOM ALUMINUM ACORN TOP WELDED TO SIGN POST
FINISH ON SIGN COMPONENTS SHALL MATCH POWDER COAT #9411-8040 QUAKER BRONZE BY TCI POWDER COATINGS
3" ANGLE ALUM. (1/8" THICKNESS) WELDED TO BACK PLATE
.080 ALUMINUM SIGN FACE BOLTED TO 0.90 ALUMINUM BACK PLATE AND MOUNTING HARDWARE (DETAIL "A"). GRAPHICS TO BE REFLECTIVE VINYL
1/4" THICK CUT OUT ALUMINUM "W" LOGOS (4 PER POST) WITH 3/4"x3/4" ALUMINUM BORDERS ADHERED TO SIGN POST
5"x5" 6063-T6 3/16" WALL SQUARE TUBE ALUMINUM PIPE SUPPORT
CAST ALUMINUM BASE BOLTED TO SIGN POST
BREAKAWAY LOCATION
DIRECT BURIAL OF ALUMINUM PIPE SUPPORT
CONC. CURB
PAVEMENT
FINISH GRADE
2500 PSI CONCRETE (TYP.)
1" DIA. HOLE FOR BREAKAWAY (ALL 4 SIDES)
GRADE
VARIES
2'-6"
2'-8"
12'-0"
7'-0" MINIMUM
2'-6" DEPTH
1'-4"
3" ALUMINUM ANGLES WELDED TO SIGN POST (FOR SPIN AVOIDANCE)
DETAIL "C"
STANDARD ENGINEERING DETAILS & SPECIFICATIONS
TYPICAL STREET SIGN ASSEMBLY
CITY OF WESTON, FLORIDA
PUBLIC WORKS AND UTILITIES
2599 SOUTH POST ROAD, WESTON, FL 33327
TELEPHONE: 954-385-2600 FAX: 954-385-2610
DATE
Feb. 2010
SCALE
N.T.S.
DRAWING NO.
R-12

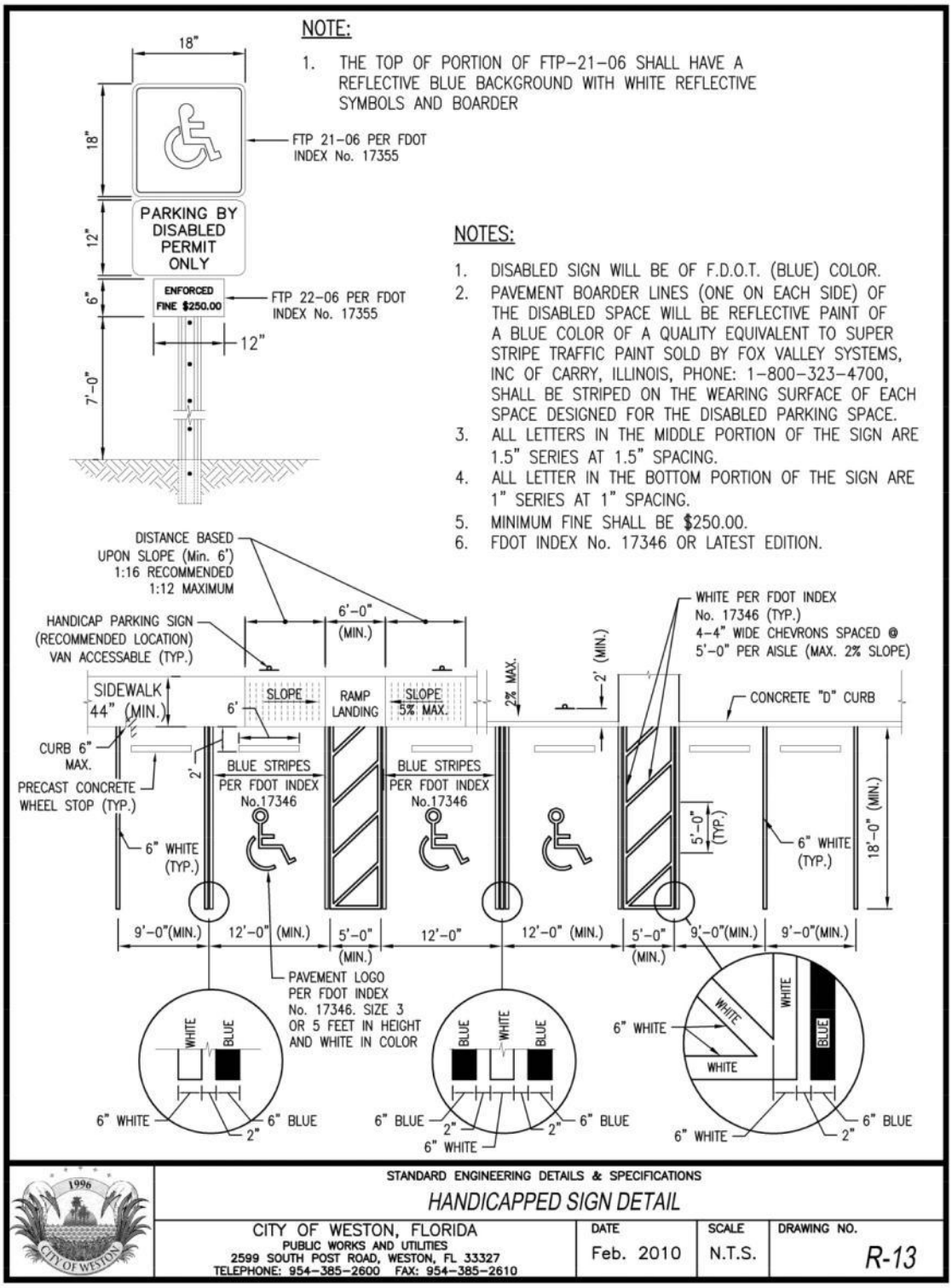
NOTE:
1. THE TOP OF PORTION OF FTP-21-06 SHALL HAVE A REFLECTIVE BLUE BACKGROUND WITH WHITE REFLECTIVE SYMBOLS AND BOARDER
18"
18"
12"
6"
7'-0"
FTP 21-06 PER FDOT INDEX No. 17355
PARKING BY DISABLED PERMIT ONLY
ENFORCED FINE $250.00
FTP 22-06 PER FDOT INDEX No. 17355
12"
NOTES:
1. DISABLED SIGN WILL BE OF F.D.O.T. (BLUE) COLOR.
2. PAVEMENT BOARDER LINES (ONE ON EACH SIDE) OF THE DISABLED SPACE WILL BE REFLECTIVE PAINT OF A BLUE COLOR OF A QUALITY EQUIVALENT TO SUPER STRIPE TRAFFIC PAINT SOLD BY FOX VALLEY SYSTEMS, INC OF CARRY, ILLINOIS, PHONE: 1-800-323-4700, SHALL BE STRIPED ON THE WEARING SURFACE OF EACH SPACE DESIGNED FOR THE DISABLED PARKING SPACE.
3. ALL LETTERS IN THE MIDDLE PORTION OF THE SIGN ARE 1.5" SERIES AT 1.5" SPACING.
4. ALL LETTER IN THE BOTTOM PORTION OF THE SIGN ARE 1" SERIES AT 1" SPACING.
5. MINIMUM FINE SHALL BE $250.00.
6. FDOT INDEX No. 17346 OR LATEST EDITION.
DISTANCE BASED UPON SLOPE (Min. 6') 1:16 RECOMMENDED 1:12 MAXIMUM
HANDICAP PARKING SIGN (RECOMMENDED LOCATION) VAN ACCESSABLE (TYP.)
6'-0" (MIN.)
WHITE PER FDOT INDEX No. 17346 (TYP.) 4-4" WIDE CHEVRONS SPACED @ 5'-0" PER AISLE (MAX. 2% SLOPE)
SIDEWALK 44" (MIN.)
6'
SLOPE
RAMP LANDING
SLOPE 5% MAX.
2% MAX.
2' (MIN.)
CONCRETE "D" CURB
CURB 6" MAX.
PRECAST CONCRETE WHEEL STOP (TYP.)
2'
BLUE STRIPES PER FDOT INDEX No.17346
BLUE STRIPES PER FDOT INDEX No.17346
5'-0" (TYP.)
6" WHITE (TYP.)
6" WHITE (TYP.)
18'-0" (MIN.)
9'-0"(MIN.)
12'-0" (MIN.)
5'-0" (MIN.)
12'-0"
12'-0" (MIN.)
5'-0" (MIN.)
9'-0"(MIN.)
9'-0"(MIN.)
PAVEMENT LOGO PER FDOT INDEX No. 17346. SIZE 3 OR 5 FEET IN HEIGHT AND WHITE IN COLOR
WHITE
BLUE
6" WHITE
6" BLUE
2"
BLUE
WHITE
BLUE
6" BLUE
2"
2"
6" BLUE
6" WHITE
6" WHITE
WHITE
WHITE
WHITE
BLUE
6" WHITE
2"
6" BLUE
STANDARD ENGINEERING DETAILS & SPECIFICATIONS
HANDICAPPED SIGN DETAIL
CITY OF WESTON, FLORIDA
PUBLIC WORKS AND UTILITIES
2599 SOUTH POST ROAD, WESTON, FL 33327
TELEPHONE: 954-385-2600 FAX: 954-385-2610
DATE
Feb. 2010
SCALE
N.T.S.
DRAWING NO.
R-13

"PROCEDURE FOR RESTORATION OF FLEXIBLE PAVEMENT"

THE PROCEDURE FOR BACKFILL AND PAVEMENT RESTORATION SHALL BE AS FOLLOWS:

"DENSITY TEST OF COMPACTED FILL, BACKFILL AND/OR BASE SHALL BE TAKEN AT EACH LIFT. PRIOR TO PLACEMENT OF THE SUCCEEDING LIFT OF MATERIAL, DENSITY TESTS SHALL BE TAKEN AT EACH 6" LIFT FOR BASE ROCK AND EACH 8" LIFT FOR COMPACTED FILL OR BACKFILL, ACCORDING TO THE FOLLOWING SCHEDULE".

1. FOR ANY ROAD CROSSING IN WHICH THE ROAD IS CUT AND RESTORED ONE LANE AT A TIME, ONE DENSITY TEST SHALL BE TAKEN IN EACH LANE AT EACH LIFT.

2. FOR ANY ROAD CROSSING IN WHICH THE ROAD IS CUT AND RESTORED TWO LANES AT A TIME, DENSITIES SHALL BE TESTED IN ONE LANE PER LIFT, ALTERNATING LANES WITH EACH LIFT.

3. FOR ANY ROAD CROSSING IN WHICH THE ROAD IS CUT AND RESTORED THREE LANES AT A TIME, DENSITIES SHALL BE TESTED IN TWO LOCATIONS PER LIFT, STAGGERING LOCATIONS WITH EACH SUCCESSIVE LIFT.

4. CUTS ACROSS ROADS SHALL NOT BE LEFT OPEN OVERNIGHT. TRENCHES SHALL BE BACKFILLED AND A TEMPORARY ASPHALT APPLIED TO MAKE A SMOOTH LEVEL PATCH. THE TRENCHES SHALL THEN BE EXCAVATED THE NEXT DAY AND PERMANENT BACKFILL AND PAVEMENT INSTALLED IN ACCORDANCE WITH THESE STANDARDS. THE ONLY EXCEPTIONS AT THE DISCRETION OF THE CITY ENGINEER, WILL BE IN CASES WHERE THE FACILITY INSTALLED MUST BE TESTED BEFORE THE ROADS ARE RESTORED. IN THESE CASES, THE PERMANENT RESTORATION MUST BE PERFORMED ON THE DAY OF TESTING OR THE NEXT DAY.

5. IN CASES WHERE THE INSTALLATION PARALLELS THE ROADWAY AND DAMAGES THE PAVEMENT, THE DENSITY TESTS SHALL BE MADE EVERY 100 L.F. AT EACH LIFT, WITH TEST LOCATIONS STAGGERED 25' EACH LIFT.

6. ROADWAY BASE MATERIAL SHALL BE COMPACTED TO A MINIMUM OF 98% OF MAXIMUM DRY DENSITY, AS DETERMINED BY A.A.S.H.T.O. T-180 (MODIFIED PROCTOR TEST). SUBGRADE MATERIAL UNDER PAVED AREAS SHALL BE COMPACTED TO A MINIMUM OF 98% OF MAXIMUM DRY DENSITY. SHOULDER AREAS AND SWALES AREAS BEYOND SHOULDERS SHALL BE COMPACTED TO A MINIMUM OF 98% OF MAXIMUM DRY DENSITY, ALL AS DETERMINED BY A.A.S.H.T.O. T-180-C (STANDARD PROCTOR TEST).

7. RESTORATION OF STRIPING, SIGNING AND SIGNALIZATION DEVICES SHALL BE ACCOMPLISHED IMMEDIATELY AFTER PAVEMENT RESTORATION IS COMPLETED. A COPY OF ALL PROCTOR AND FIELD DENSITY TESTS SHALL BE FURNISHED TO THE CITY.

8. OPEN CUTS ARE AT THE DISCRETION OF THE CITY AND APPROVAL MUST BE OBTAINED FROM THE CITY PRIOR TO CONSTRUCTION.

NOTE:
THE ABOVE LISTED REPRESENTS THE MINIMUM PROCEDURE. THE INSPECTOR MAY REQUIRE ADDITIONAL TESTING IF, IN HIS/HER OPINION, CONDITIONS OR PRIOR TEST RESULTS WARRANT THEM.

1996 CITY OF WESTON	STANDARD ENGINEERING DETAILS & SPECIFICATIONS *PROCEDURE FOR RESTORATION OF FLEXIBLE PAVEMENT*			
	CITY OF WESTON, FLORIDA PUBLIC WORKS AND UTILITIES 2599 SOUTH POST ROAD, WESTON, FL 33327 TELEPHONE: 954-385-2600 FAX: 954-385-2610	DATE Feb. 2010	SCALE N.T.S.	DRAWING NO. *R-14*

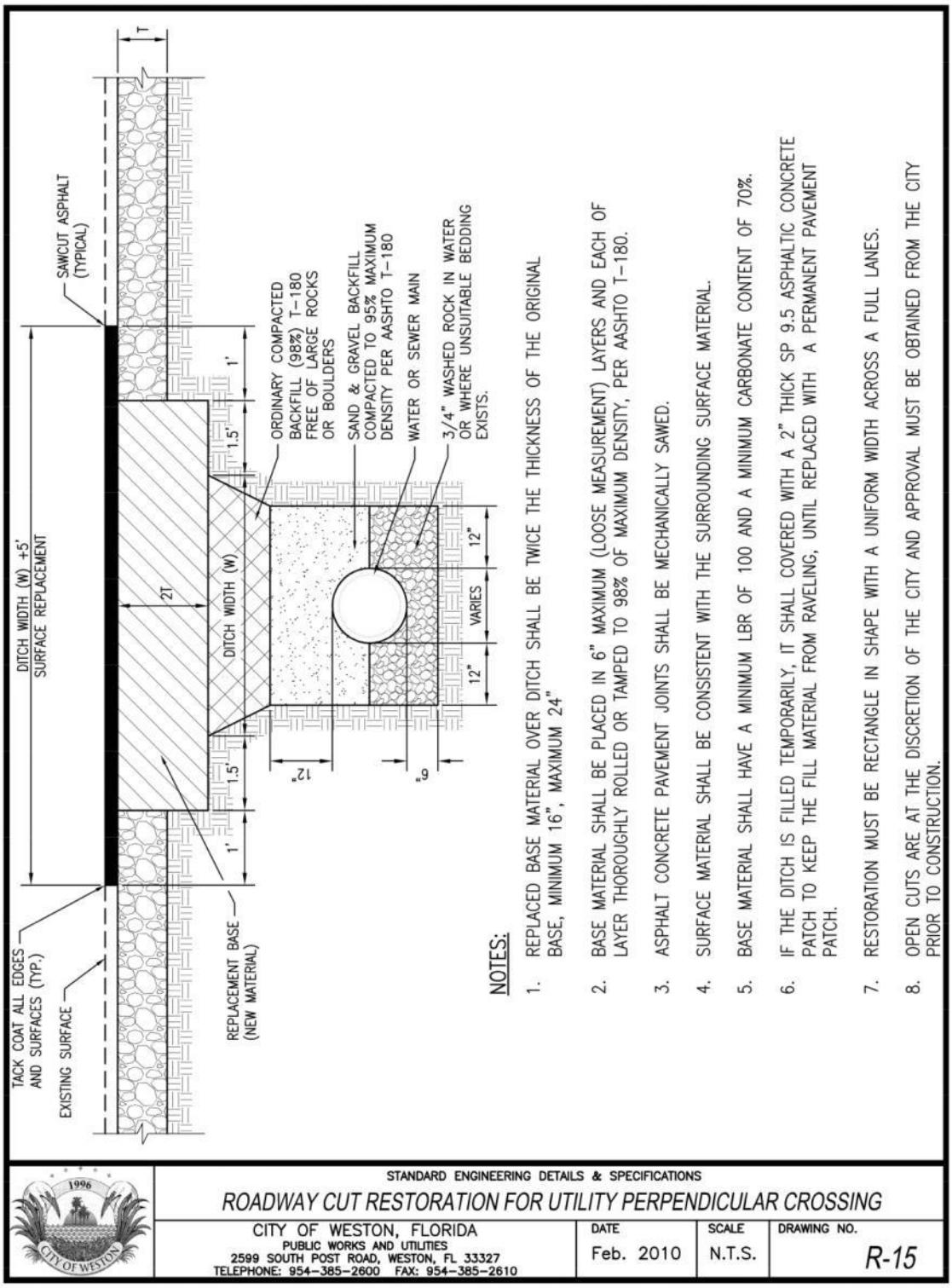

NOTES:

1. REPLACED BASE MATERIAL OVER DITCH SHALL BE TWICE THE THICKNESS OF THE ORIGINAL BASE, MINIMUM 16", MAXIMUM 24"
2. BASE MATERIAL SHALL BE PLACED IN 6" MAXIMUM (LOOSE MEASUREMENT) LAYERS AND EACH OF LAYER THOROUGHLY ROLLED OR TAMPED TO 98% OF MAXIMUM DENSITY, PER AASHTO T-180.
3. ASPHALT CONCRETE PAVEMENT JOINTS SHALL BE MECHANICALLY SAWED.
4. SURFACE MATERIAL SHALL BE CONSISTENT WITH THE SURROUNDING SURFACE MATERIAL.
5. BASE MATERIAL SHALL HAVE A MINIMUM LBR OF 100 AND A MINIMUM CARBONATE CONTENT OF 70%.
6. IF THE DITCH IS FILLED TEMPORARILY, IT SHALL COVERED WITH A 2" THICK SP 9.5 ASPHALTIC CONCRETE PATCH TO KEEP THE FILL MATERIAL FROM RAVELING, UNTIL REPLACED WITH A PERMANENT PAVEMENT PATCH.
7. RESTORATION MUST BE RECTANGLE IN SHAPE WITH A UNIFORM WIDTH ACROSS A FULL LANES.
8. OPEN CUTS ARE AT THE DISCRETION OF THE CITY AND APPROVAL MUST BE OBTAINED FROM THE CITY PRIOR TO CONSTRUCTION.

STANDARD ENGINEERING DETAILS & SPECIFICATIONS

ROADWAY CUT RESTORATION FOR UTILITY PERPENDICULAR CROSSING

CITY OF WESTON, FLORIDA
PUBLIC WORKS AND UTILITIES
2599 SOUTH POST ROAD, WESTON, FL 33327
TELEPHONE: 954-385-2600 FAX: 954-385-2610

DATE	SCALE	DRAWING NO.
Feb. 2010	N.T.S.	R-15

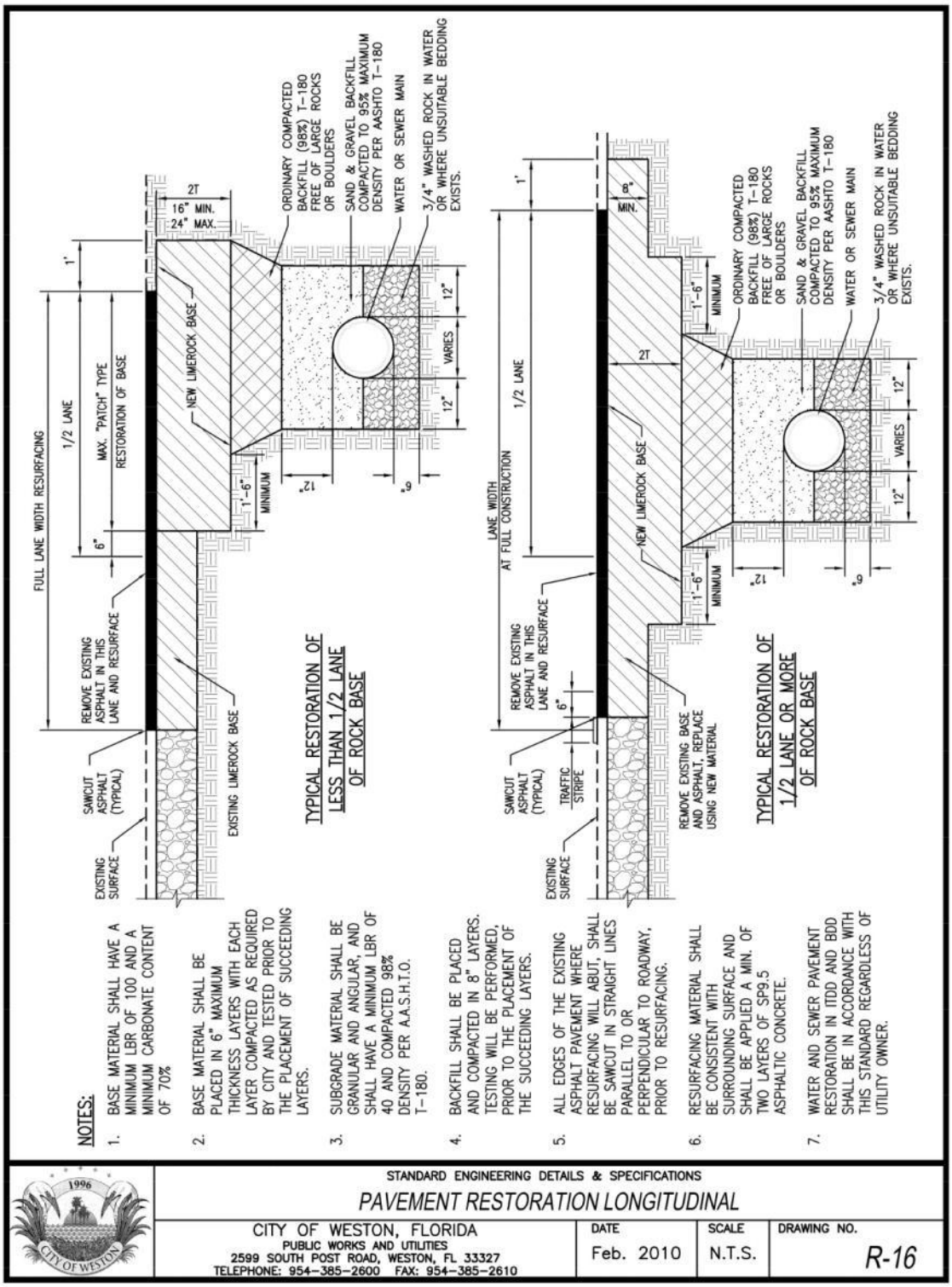
FULL LANE WIDTH RESURFACING
1/2 LANE
MAX. "PATCH" TYPE RESTORATION OF BASE
1'
6"
REMOVE EXISTING ASPHALT IN THIS LANE AND RESURFACE
SAWCUT ASPHALT (TYPICAL)
EXISTING SURFACE
EXISTING LIMEROCK BASE
NEW LIMEROCK BASE
2T
16" MIN.
24" MAX.
1'-6" MINIMUM
12"
6"
12"
VARIES
12"
ORDINARY COMPACTED BACKFILL (98%) T-180 FREE OF LARGE ROCKS OR BOULDERS
SAND & GRAVEL BACKFILL COMPACTED TO 95% MAXIMUM DENSITY PER AASHTO T-180
WATER OR SEWER MAIN
3/4" WASHED ROCK IN WATER OR WHERE UNSUITABLE BEDDING EXISTS.
TYPICAL RESTORATION OF LESS THAN 1/2 LANE OF ROCK BASE
LANE WIDTH AT FULL CONSTRUCTION
1/2 LANE
1'
8" MIN.
REMOVE EXISTING ASPHALT IN THIS LANE AND RESURFACE
6"
SAWCUT ASPHALT (TYPICAL)
TRAFFIC STRIPE
EXISTING SURFACE
REMOVE EXISTING BASE AND ASPHALT, REPLACE USING NEW MATERIAL
NEW LIMEROCK BASE
2T
1'-6" MINIMUM
1'-6" MINIMUM
12"
6"
12"
VARIES
12"
ORDINARY COMPACTED BACKFILL (98%) T-180 FREE OF LARGE ROCKS OR BOULDERS
SAND & GRAVEL BACKFILL COMPACTED TO 95% MAXIMUM DENSITY PER AASHTO T-180
WATER OR SEWER MAIN
3/4" WASHED ROCK IN WATER OR WHERE UNSUITABLE BEDDING EXISTS.
TYPICAL RESTORATION OF 1/2 LANE OR MORE OF ROCK BASE
NOTES:
1. BASE MATERIAL SHALL HAVE A MINIMUM LBR OF 100 AND A MINIMUM CARBONATE CONTENT OF 70%
2. BASE MATERIAL SHALL BE PLACED IN 6" MAXIMUM THICKNESS LAYERS WITH EACH LAYER COMPACTED AS REQUIRED BY CITY AND TESTED PRIOR TO THE PLACEMENT OF SUCCEEDING LAYERS.
3. SUBGRADE MATERIAL SHALL BE GRANULAR AND ANGULAR, AND SHALL HAVE A MINIMUM LBR OF 40 AND COMPACTED 98% DENSITY PER A.A.S.H.T.O. T-180.
4. BACKFILL SHALL BE PLACED AND COMPACTED IN 8" LAYERS. TESTING WILL BE PERFORMED, PRIOR TO THE PLACEMENT OF THE SUCCEEDING LAYERS.
5. ALL EDGES OF THE EXISTING ASPHALT PAVEMENT WHERE RESURFACING WILL ABUT, SHALL BE SAWCUT IN STRAIGHT LINES PARALLEL TO OR PERPENDICULAR TO ROADWAY, PRIOR TO RESURFACING.
6. RESURFACING MATERIAL SHALL BE CONSISTENT WITH SURROUNDING SURFACE AND SHALL BE APPLIED A MIN. OF TWO LAYERS OF SP9.5 ASPHALTIC CONCRETE.
7. WATER AND SEWER PAVEMENT RESTORATION IN ITDD AND BDD SHALL BE IN ACCORDANCE WITH THIS STANDARD REGARDLESS OF UTILITY OWNER.
1996
CITY OF WESTON
STANDARD ENGINEERING DETAILS & SPECIFICATIONS
PAVEMENT RESTORATION LONGITUDINAL
CITY OF WESTON, FLORIDA
PUBLIC WORKS AND UTILITIES
2599 SOUTH POST ROAD, WESTON, FL 33327
TELEPHONE: 954-385-2600 FAX: 954-385-2610
DATE
Feb. 2010
SCALE
N.T.S.
DRAWING NO.
R-16

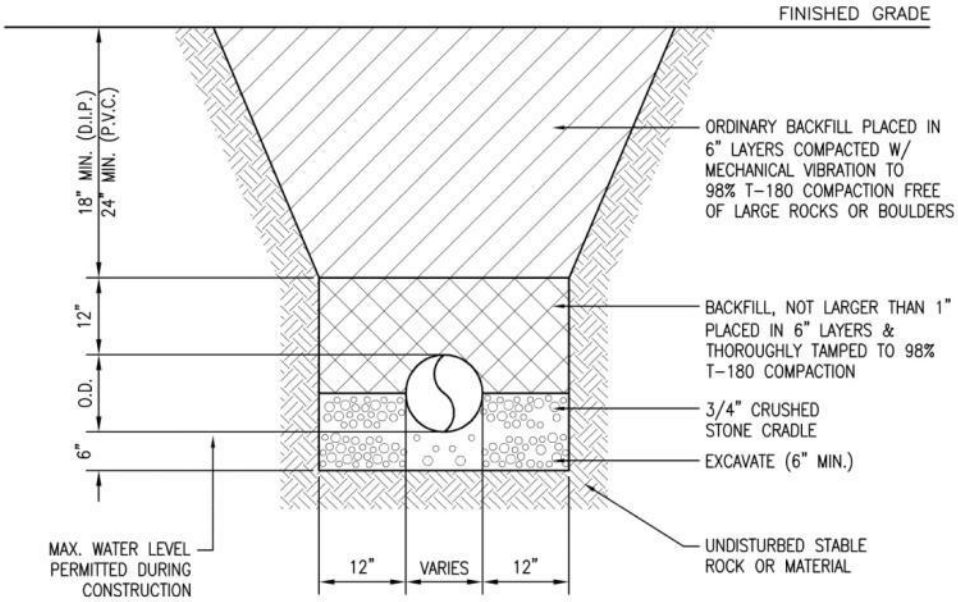

NOTE:

MAXIMUM DENSITY AS DETERMINED BY A.A.S.H.T.O.

	STANDARD ENGINEERING DETAILS & SPECIFICATIONS *TRENCH DETAIL UNPAVED AREAS*			
	CITY OF WESTON, FLORIDA PUBLIC WORKS AND UTILITIES 2599 SOUTH POST ROAD, WESTON, FL 33327 TELEPHONE: 954-385-2600 FAX: 954-385-2610	DATE Feb. 2010	SCALE N.T.S.	DRAWING NO. *R-17*

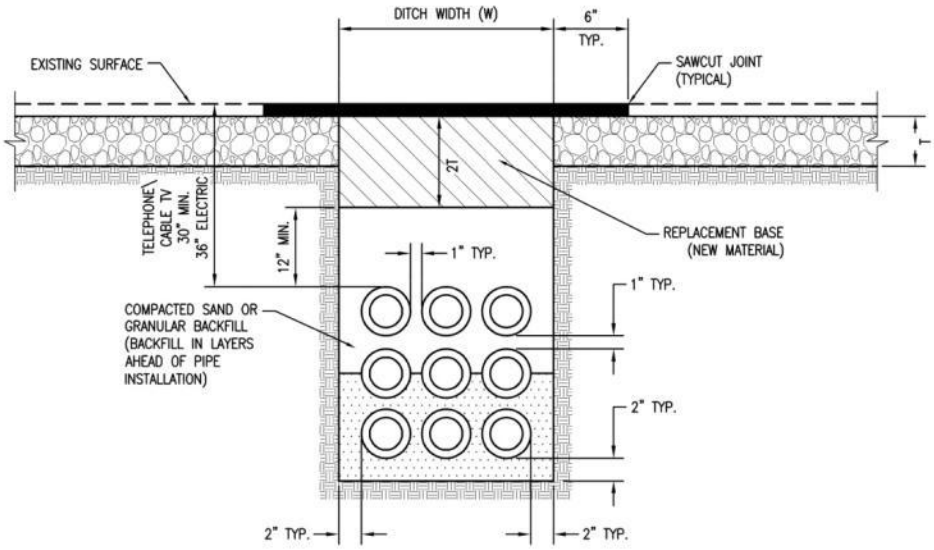

DETAIL "A"
(CROSSING ROADWAY)

NOTES:

1. REPLACED BASE MATERIAL OVER DITCH SHALL BE TWICE THE THICKNESS OF THE ORIGINAL BASE, MINIMUM 8", MAXIMUM 18"
2. BASE MATERIAL SHALL BE PLACED IN 6" MAXIMUM (LOOSE MEASUREMENT) LAYERS AND EACH OF LAYER THOROUGHLY ROLLED OR TAMPED TO 98% OF MAXIMUM DENSITY, PER AASHTO T-180.
3. ASPHALT CONCRETE PAVEMENT JOINTS SHALL BE MECHANICALLY SAWED.
4. SURFACE MATERIAL SHALL BE CONSISTENT WITH THE SURROUNDING SURFACE MATERIAL.
5. SURFACED TREATED PAVEMENT JOINTS SHALL BE LAPPED AND FEATHERED.
6. BASE MATERIAL SHALL HAVE A MINIMUM LBR OF 100 AND A MINIMUM CARBONATE CONTENT OF 70% (60% FOR LOCAL STREETS).
7. IF THE DITCH IS FILLED TEMPORARILY, IT SHALL COVERED WITH A 2" THICK ASPHALTIC CONCRETE PATCH TO KEEP THE FILL MATERIAL FROM RAVELING, UNTIL REPLACED WITH A PERMANENT PAVEMENT PATCH.
8. OPEN CUTS ARE AT THE DISCRETION OF THE CITY AND APPROVAL MUST BE OBTAINED FROM THE CITY PRIOR TO CONSTRUCTION.

1996 CITY OF WESTON	STANDARD ENGINEERING DETAILS & SPECIFICATIONS *MULTIPLE PIPE OR DUCTS (4" DIAMETER OR SMALLER)*			
	CITY OF WESTON, FLORIDA PUBLIC WORKS AND UTILITIES 2599 SOUTH POST ROAD, WESTON, FL 33327 TELEPHONE: 954-385-2600 FAX: 954-385-2610	DATE Feb. 2010	SCALE N.T.S.	DRAWING NO. *R-18*

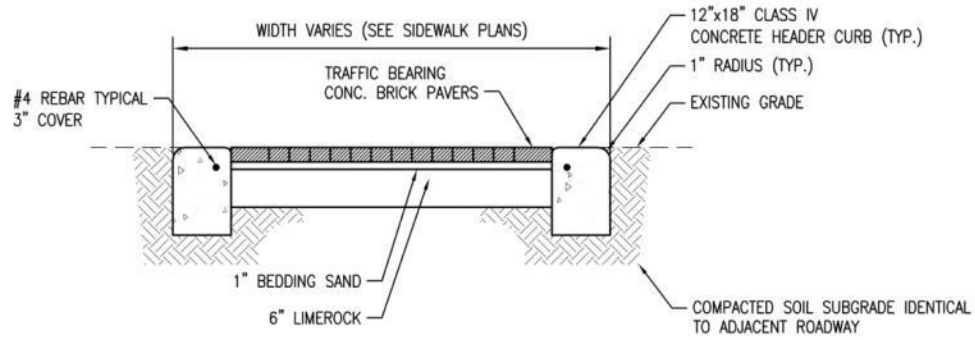

BRICK PAVER CROSSWALK SECTION AND AT DRIVEWAY CONNECTIONS TO ROADWAYS

NOTES:

1. BEDDING SAND TO CONFORM TO ASTM C 33 COMMONLY KNOWN AS MANUFACTURED CONCRETE SAND. DO NOT USE MASONRY SAND.
2. PROVIDE 1/16" WIDE x 1/4" DEEP SAWED CONTRACTION JOINTS AT 10' CENTERS (MAX.) NO LATER THAN 12 HOURS AFTER THE CONCRETE TAKES INITIAL SET. COMPARABLE TOOLED JOINTS MAY BE PROVIDED IN LIEU OF SAWED JOINTS.

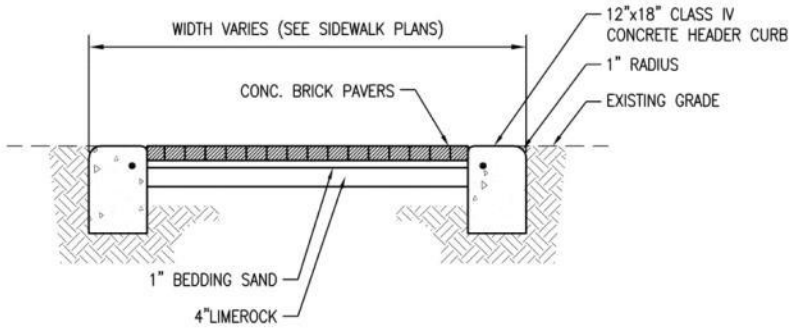

BRICK PAVER SIDEWALK SECTION

NOTES:

1. BEDDING SAND TO CONFORM TO ASTM C 33 COMMONLY KNOWN AS MANUFACTURED CONCRETE SAND. DO NOT USE MASONRY SAND.
2. THIS SIDEWALK SECTION IS FOR THE NON-VEHICULAR SIDEWALK AREAS ONLY.
3. PROVIDE 1/16" WIDE x 1/4" DEEP SAWED CONTRACTION JOINTS IN CONCRETE AT 10' CENTERS (MAX.) NO LATER THAN 12 HOURS AFTER INITIAL SET. COMPARABLE TOOLED JOINTS MAY BE PROVIDED IN LIEU OF SAWED JOINTS.

	STANDARD ENGINEERING DETAILS & SPECIFICATIONS *STANDARD BRICK PAVERS DETAIL*			
	CITY OF WESTON, FLORIDA PUBLIC WORKS AND UTILITIES 2599 SOUTH POST ROAD, WESTON, FL 33327 TELEPHONE: 954-385-2600 FAX: 954-385-2610	DATE Feb. 2010	SCALE N.T.S.	DRAWING NO. *R-19*

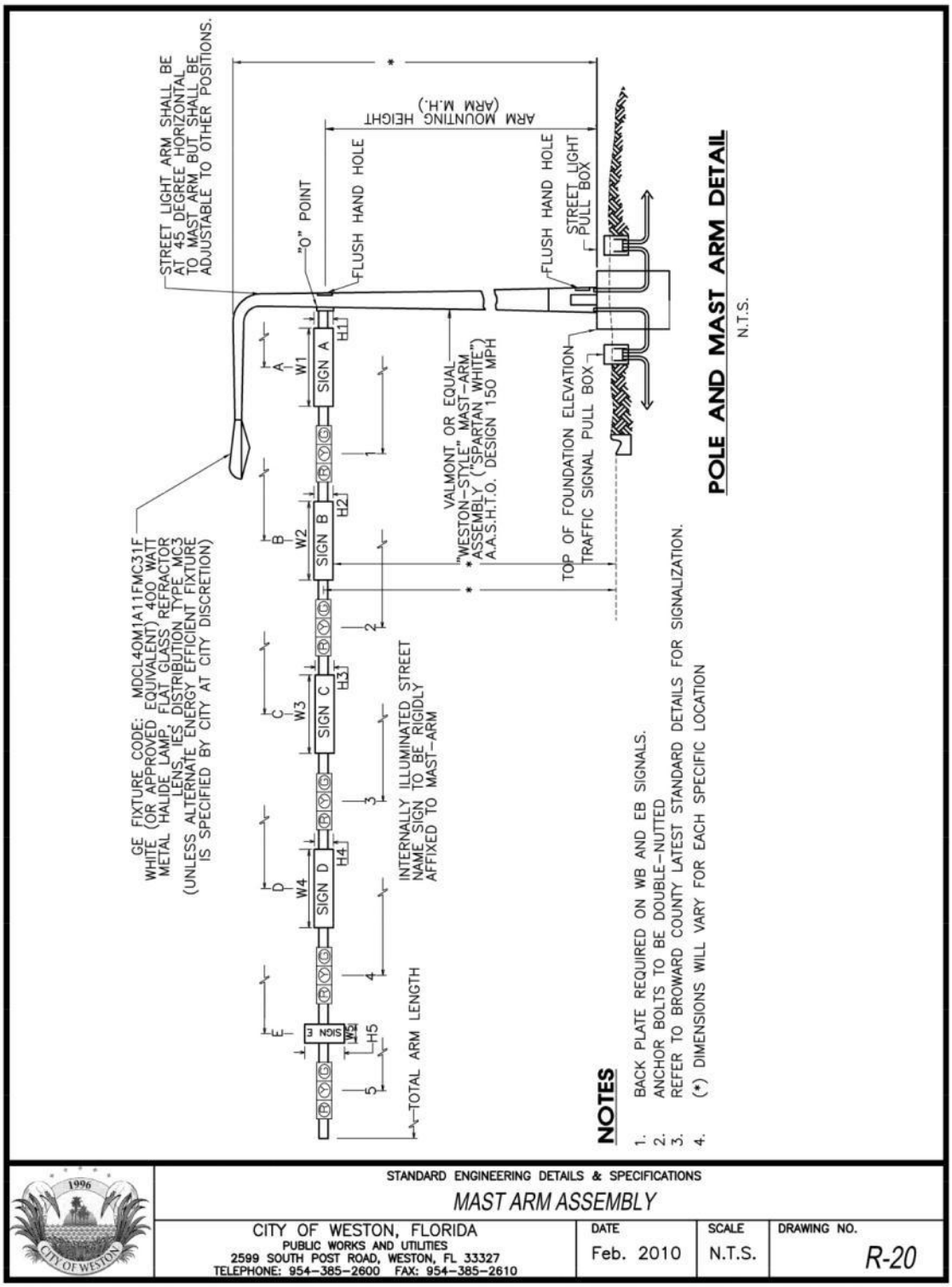
STREET LIGHT ARM SHALL BE AT 45 DEGREE HORIZONTAL TO MAST ARM BUT SHALL BE ADJUSTABLE TO OTHER POSITIONS.
ARM MOUNTING HEIGHT (ARM M.H.)
"O" POINT
FLUSH HAND HOLE
FLUSH HAND HOLE
STREET LIGHT PULL BOX
GE FIXTURE CODE: MDCL4OM1A11FMC31F WHITE (OR APPROVED EQUIVALENT) 400 WATT METAL HALIDE LAMP, FLAT GLASS REFRACTOR LENS, IES DISTRIBUTION TYPE MC3 (UNLESS ALTERNATE ENERGY EFFICIENT FIXTURE IS SPECIFIED BY CITY AT CITY DISCRETION)
SIGN A
SIGN B
SIGN C
SIGN D
SIGN E
W1
W2
W3
W4
W5
H1
H2
H3
H4
H5
A
B
C
D
E
1
2
3
4
5
INTERNALLY ILLUMINATED STREET NAME SIGN TO BE RIGIDLY AFFIXED TO MAST-ARM
TOTAL ARM LENGTH
VALMONT OR EQUAL "WESTON-STYLE" MAST-ARM ASSEMBLY ("SPARTAN WHITE") A.A.S.H.T.O. DESIGN 150 MPH
TOP OF FOUNDATION ELEVATION
TRAFFIC SIGNAL PULL BOX
POLE AND MAST ARM DETAIL
N.T.S.
NOTES
1. BACK PLATE REQUIRED ON WB AND EB SIGNALS.
2. ANCHOR BOLTS TO BE DOUBLE-NUTTED
3. REFER TO BROWARD COUNTY LATEST STANDARD DETAILS FOR SIGNALIZATION.
4. (*) DIMENSIONS WILL VARY FOR EACH SPECIFIC LOCATION
STANDARD ENGINEERING DETAILS & SPECIFICATIONS
MAST ARM ASSEMBLY
CITY OF WESTON, FLORIDA
PUBLIC WORKS AND UTILITIES
2599 SOUTH POST ROAD, WESTON, FL 33327
TELEPHONE: 954-385-2600 FAX: 954-385-2610
DATE
Feb. 2010
SCALE
N.T.S.
DRAWING NO.
R-20

NOTES:

1. SIGNAL HEADS SHALL BE AFFIXED TO MAST ARMS WITH TRI-ST40 BRACKETS WITH SUFFICIENT TERMINALS FOR THE MAXIMUM REQUIREMENTS OF THIS PLAN.
2. IT SHALL BE THE CONTRACTOR'S RESPONSIBILITY TO FURNISH AND INSTALL THE NECESSARY SIGN ATTACHMENTS FOR COMPLETE AND SECURED SIGN INSTALLATIONS.
3. IT SHALL BE THE RESPONSIBILITY OF THE CONTRACTOR TO DESIGN, FURNISH AND INSTALL MAST ARMS, POLES, AND FOUNDATIONS OF SUFFICIENT DESIGN TO SUPPORT THE SIGNAL HEADS, INTERNALLY ILLUMINATED SIGNS, PED SIGNALS AND RELATED HARDWARE AS SHOWN IN THE PLANS DESIGN SHALL BE COMPLY WITH CURRENT BCTED & FDOT DESIGN STANDARD.
4. THE CONTRACTOR SHALL FURNISH SHOP DRAWINGS FOR APPROVAL. DRAWINGS SHALL CONTAIN A STATEMENT, SIGNATURE, AND SEAL OF A PROFESSIONAL ENGINEER REGISTERED IN THE STATE OF FLORIDA CERTIFYING THAT THE DESIGN IS SUFFICIENT FOR THE PROPOSED INSTALLATION AND FUTURE REQUIREMENTS.
5. THE POLES AND MAST ARMS SHALL BE SO CONSTRUCTED, SO CONNECTED, AND SO INSTALLED THAT IN THEIR FINAL POSITIONS THE CENTERLINE OF THE SIGNAL ARM WILL MAINTAIN A CLEARANCE ABOVE THE STREET OF NOT LESS THAN 17.50'.
6. THE ARM DESIGNS SHALL BE A STRAIGHT ROUND TAPERED STEEL SIGNAL MAST ARM WITH NO SLIP FIT OR FIELD WELDED JOINTS. THE LIGHTING ARM SHALL BE A SHORT RADIUS DAVIT TYPE 16' LONG AND NOT LESS THAN 35' MOUNTING HEIGHT.
7. STREET LIGHTING SURGE PROTECTORS, FUSES, DISCONNECTS, WIRING AND GROUNDING SHALL BE INSTALLED IN ACCORDANCE WITH LATEST F.D.O.T. STANDARDS.
8. MAST ARMS AND POLES SHALL BE EQUIPPED WITH PULL WIRES.
9. SEPARATE CABLES SHALL BE INSTALLED TO EACH POLE INCLUDING SEPARATE CABLES FOR PEDESTRIAN SIGNALS.
10. POLES SHALL HAVE FLUSH HAND HOLES, ONE LOCATED NEAR BASE AND ONE NEAR MAST ARM CONNECTION.
11. ONE INCH DIAMETER WIRE ACCESS HOLES FOR SIGNAL CABLE ASSOCIATED WITH EACH HEAD RUBBER GROMMET SHALL BE FIELD DRILLED AND COLD GALVANIZED ON EACH SIGNAL MAST ARM BY THE CONTRACTOR. EACH LOCATION IS THE RESPONSIBILITY OF THE CONTRACTOR TO VERIFY PRIOR TO DRILLING.
12. INSTALL 20 AMP CIRCUIT BREAKER AND APPROPRIATE WIRING AT THE SERVICE DISCONNECT FOR SEPARATE STREET LIGHT POWER SERVICE.
13. STREET LIGHT SYSTEM (IF APPLICABLE) TO INCLUDE (1) LIGHTING CONTACTOR WITH NEMA 3R RAIN PROOF ENCLOSURE. THE LIGHTING CONTACTOR SHALL BE ELECTRICALLY HELD WITH A PHOTO ELECTRIC CELL AND 2 POLES.

1996 CITY OF WESTON	STANDARD ENGINEERING DETAILS & SPECIFICATIONS *STANDARD MAST ARM NOTES*			
	CITY OF WESTON, FLORIDA PUBLIC WORKS AND UTILITIES 2599 SOUTH POST ROAD, WESTON, FL 33327 TELEPHONE: 954-385-2600 FAX: 954-385-2610	DATE Feb. 2010	SCALE N.T.S.	DRAWING NO. *R-20A*

LIGHTING DESIGN CRITERIA

A.	UNIFORMITY RATIO	REQUIRED VALUE LESS THAN 4:1
B.	WIND SPEED	150 MPH
C.	MAXIMUM TO MINIMUM RATIO	REQUIRED VALUE LESS THAN 12:1
D.	AVERAGE ILLUMINATION	1.50 f.c.

E. LUMINAIRE TO BE 400 WATT METAL HALIDE DESIGN FOR MEDIUM CUTOFF TYPE (3) DISTRIBUTION MEETING ABOVE REQUIREMENTS ACROSS INTERSECTION (e.g. GENERAL ELECTRIC M-400A SERIES POWR/DOOR W/ CUTOFF OPTICS) INTEGRAL REGULARTORY TYPE BALLAST WIRED FOR 120 VOLT OPERATION. SHALL PRODUCE A MINIMUM OF 50,000 INITIAL LUMENS. UNLESS ALTERNATE ENERGY EFFICIENT FIXTURE IS SPECIFIED BY CITY AT CITY DISCRETION.

F. SUBMITTAL DATA TO INCLUDE COMPUTER PRINT OUT SHOWING HORIZONTAL FOOT-CANDLE LEVELS TO BE OBTAINED USING THE SUBMITTED LUMINARES ON THIS PROJECT. AT THE FINAL INSPECTION THE CONTRACTOR SHALL VERIFY THE HORIZONTAL FOOT-CANDLE LEVELS ON THE ROADWAY WITH AN APPROVED CURRENT CALIBRATED LIGHT METER TO THE SATISFACTION OF THE PROJECT ENGINEER AND/OR MAINTAINING AGENCY.

NOTES ON FACTORY APPLIED FINISH FOR GALVANIZED STEEL STRUCTURES

1. MAST ARMS AND UPRIGHT POLES SHALL HAVE A FACTORY APPLIED THREE PART FINISH CONSISTING OF:

   A. BASE COAT: HOT DIP GALVANIZE TO ASTM A123

   B. TIE COAT: POLYAMIDE EPOXY

   C. FINISH COAT: ALIPHATIC ACRYLIC POLYURETHANE (UNLESS OTHERWISE APPROVED BY ENGINEER-OF-RECORD)

2. THE COLOR OF THE FINISH COAT SHALL BE "SPARTAN WHITE" OR APPROVED EQUIVALENT. SAMPLE CHIPS (2"X4") SHALL BE INCLUDED WITH SUBMITTALS, AT LEAST ONE OF WHICH TO BECOME THE PROPERTY OF THE CITY OF WESTON, AND AT LEAST ONE TO BE RETURNED MARKED "APPROVED" IF ACCEPTABLE.

3. AFTER ALL COATINGS HAVE SUFFICIENTLY CURED PER MANUFACTURER'S RECOMMENDATION POLES ARE TO BE SHIPPED IN PROTECTIVE WRAPPING OF 3/16 " U.V. INHIBITING PLASTIC BACKED PACKING.

4. THE COST OF PAINTING IS INCLUDED IN THE PAY ITEM FOR PROVIDING THE COMPLETE STRUCTURE.

	STANDARD ENGINEERING DETAILS & SPECIFICATIONS *STANDARD MAST ARM NOTES*			
	CITY OF WESTON, FLORIDA PUBLIC WORKS AND UTILITIES 2599 SOUTH POST ROAD, WESTON, FL 33327 TELEPHONE: 954-385-2600 FAX: 954-385-2610	DATE Feb. 2010	SCALE N.T.S.	DRAWING NO. *R-20B*

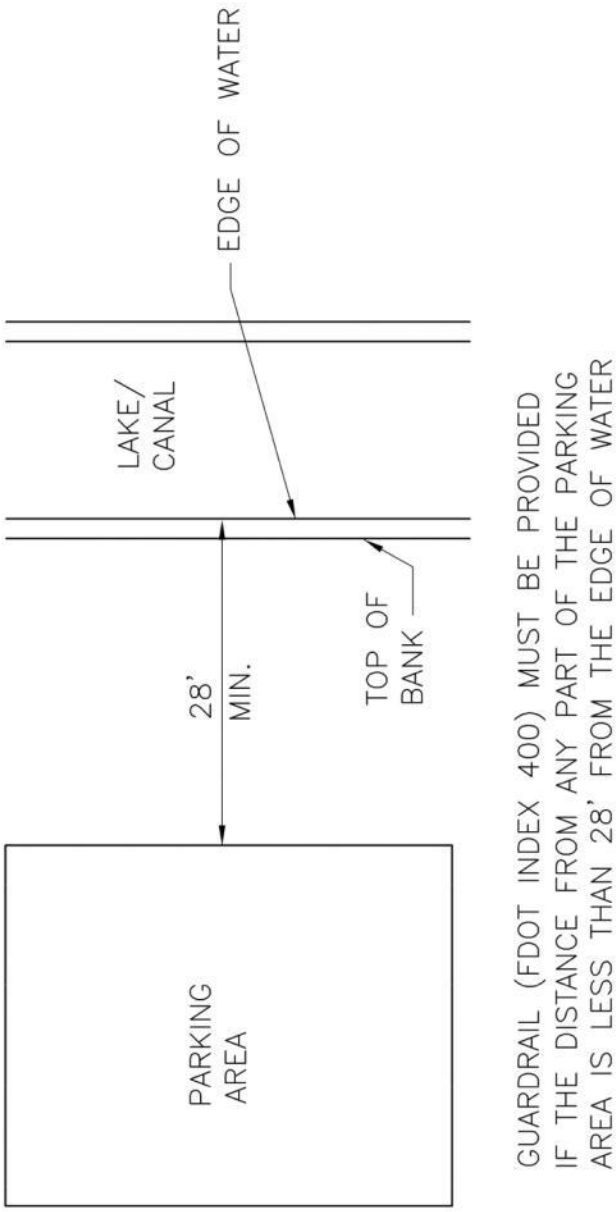

STANDARD ENGINEERING DETAILS & SPECIFICATIONS

MINIMUM CLEARANCE BETWEEN ROAD AND WATERWAY

CITY OF WESTON, FLORIDA PUBLIC WORKS AND UTILITIES 2599 SOUTH POST ROAD, WESTON, FL 33327 TELEPHONE: 954-385-2600 FAX: 954-385-2610	DATE	SCALE	DRAWING NO.
	Feb. 2010	N.T.S.	R-21

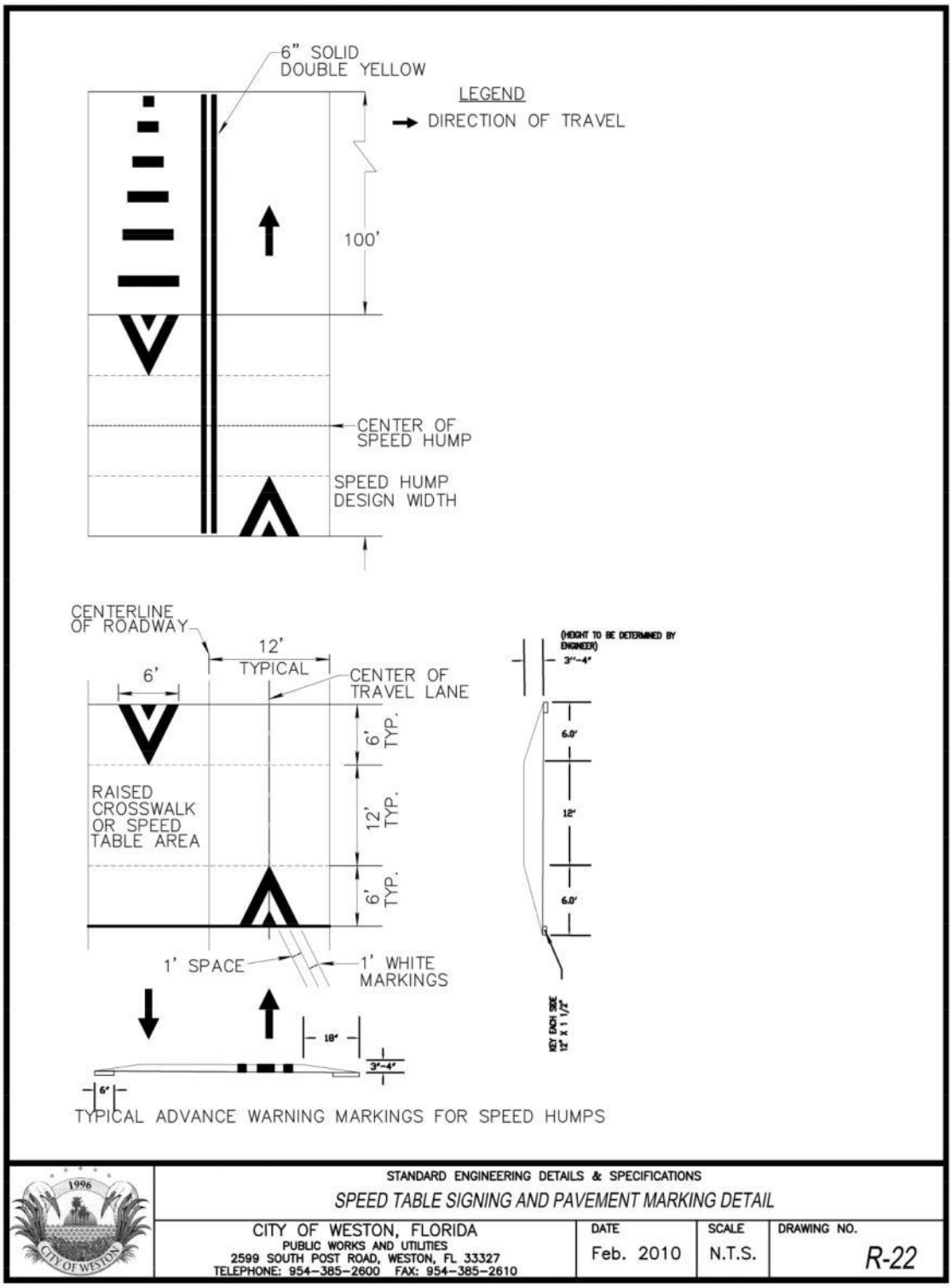
6" SOLID
DOUBLE YELLOW
LEGEND
DIRECTION OF TRAVEL
100'
CENTER OF
SPEED HUMP
SPEED HUMP
DESIGN WIDTH
CENTERLINE
OF ROADWAY
12'
TYPICAL
6'
CENTER OF
TRAVEL LANE
6' TYP.
12' TYP.
6' TYP.
RAISED
CROSSWALK
OR SPEED
TABLE AREA
1' SPACE
1' WHITE
MARKINGS
18"
3"-4"
6"
TYPICAL ADVANCE WARNING MARKINGS FOR SPEED HUMPS
(HEIGHT TO BE DETERMINED BY ENGINEER)
3"-4"
6.0'
12'
6.0'
KEY EACH SIDE
12" X 1 1/2"
STANDARD ENGINEERING DETAILS & SPECIFICATIONS
SPEED TABLE SIGNING AND PAVEMENT MARKING DETAIL
CITY OF WESTON, FLORIDA
PUBLIC WORKS AND UTILITIES
2599 SOUTH POST ROAD, WESTON, FL 33327
TELEPHONE: 954-385-2600 FAX: 954-385-2610
DATE
Feb. 2010
SCALE
N.T.S.
DRAWING NO.
R-22

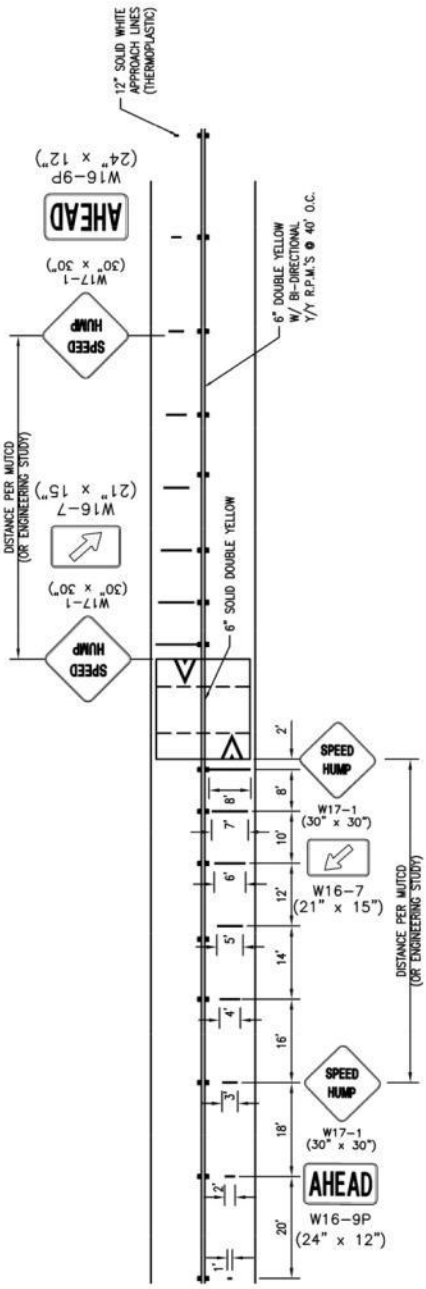

NOTE:
ALL SIGNS ARE TO BE CONSTRUCTED OF 3M DIAMOND GRADE BACKING OR EQUIVALENT.

STANDARD ENGINEERING DETAILS & SPECIFICATIONS

SPEED TABLE SIGNING AND PAVEMENT MARKING DETAIL

CITY OF WESTON, FLORIDA PUBLIC WORKS AND UTILITIES 2599 SOUTH POST ROAD, WESTON, FL 33327 TELEPHONE: 954-385-2600 FAX: 954-385-2610	DATE	SCALE	DRAWING NO.
	Feb. 2010	N.T.S.	R-22A

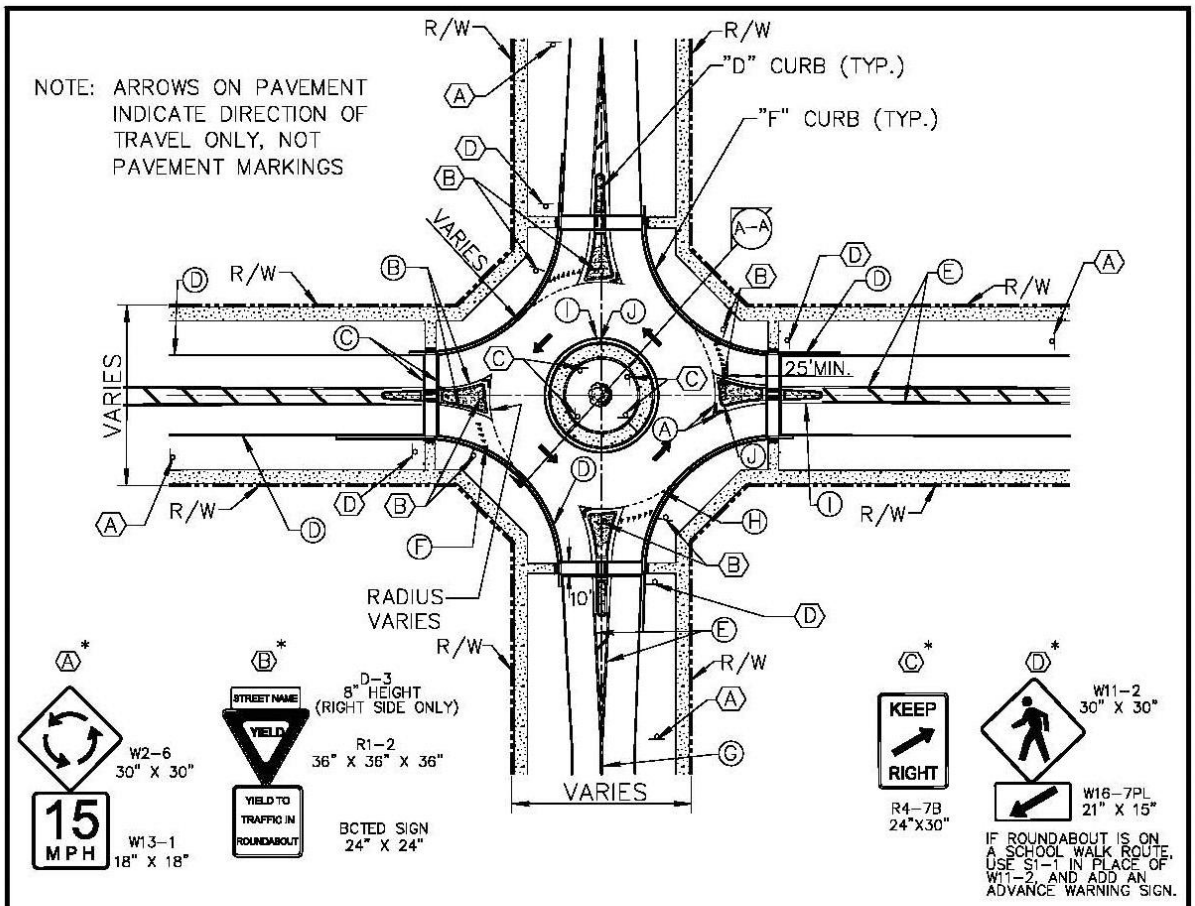

* ALL TRAFFIC CONTROL SIGNS, SIGN PLACEMENT, AND PAVEMENT MARKINGS TO FOLLOW THE MANUAL ON UNIFORM TRAFFIC CONTROL DEVICES, LATEST EDITION, AND THE BROWARD COUNTY TRAFFIC ENGINEERING DIVISION ROUNDABOUT DETAIL SHEET.

NOTE:

GEOMETRIC DESIGN ELEMENTS INCLUDING INSCRIBED CIRCLE DIAMETER, ENTRY AND EXIT RADII, CIRCULATING ROADWAY WIDTH AND TRUCK APRON WIDTH WILL VARY BASED ON INTERSECTION GEOMETRY AND REQUIRED DESIGN VEHICLE. GEOMETRIC ROUNDABOUT DESIGN SHALL CONFORM TO THE FEDERAL HIGHWAY ADMINISTRATION'S "ROUNDABOUTS: AN INFORMATIONAL GUIDE" AND THE FLORIDA DEPARTMENT OF TRANSPORTATION'S "FLORIDA ROUNDABOUT GUIDE".

	STANDARD ENGINEERING DETAILS & SPECIFICATIONS **ROUNDABOUT DETAIL - PLAN VIEW WITH SIGNAGE**			
	CITY OF WESTON, FLORIDA PUBLIC WORKS AND UTILITIES 2599 SOUTH POST ROAD, WESTON, FL 33327 TELEPHONE: 954-385-2600 FAX: 954-385-2610	DATE Feb. 2010	SCALE N.T.S.	DRAWING NO. R-23

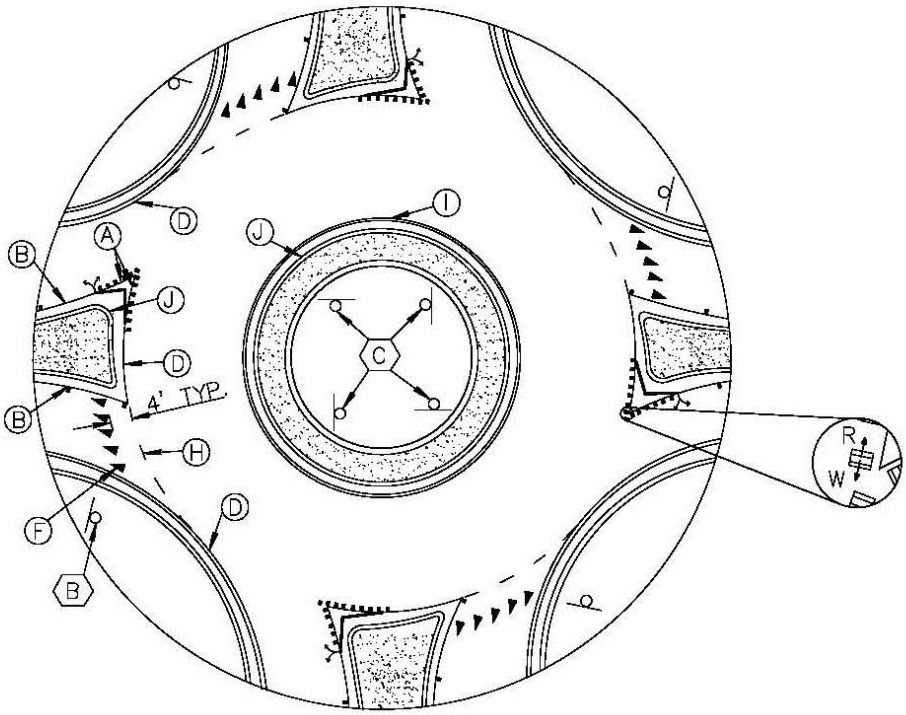

CIRCULATING ROADWAY
STRIPING DETAIL (N.T.S.)

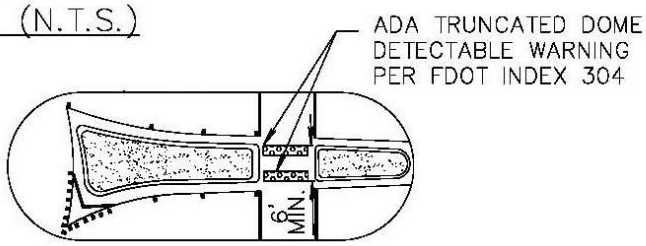

SPLITTER ISLAND DETAIL (N.T.S.)

STRIPING KEY:

A = 6" SOLID WHITE W/ 18" WHITE CHEVRON AND W/R RPMS AT 1' O.C.
B = 6" SOLID YELLOW W/ Y/Y RPMS @ 6' O.C.
C = 12" SOLID WHITE
D = 6" SOLID WHITE
E = 6" DOUBLE YELLOW W/ 18" SOLID YELLOW STRIPES AND Y/Y RPMS @ 10' O.C.
F = WHITE SHARKSTOOTH YIELD LINE 12"X18", SPACED AT 12"
G = 6" DOUBLE YELLOW WITH Y/Y RPMS AT 40' O.C.
H = 6" SKIP WHITE TYP. (2'–4')
I = 6" SOLID YELLOW
J = YELLOW ISLAND NOSE PAINT

	STANDARD ENGINEERING DETAILS & SPECIFICATIONS **ROUNDABOUT DETAIL - STRIPING**			
	CITY OF WESTON, FLORIDA PUBLIC WORKS AND UTILITIES 2599 SOUTH POST ROAD, WESTON, FL 33327 TELEPHONE: 954–385–2600 FAX: 954–385–2610	DATE Feb. 2010	SCALE N.T.S.	DRAWING NO. **R-23A**

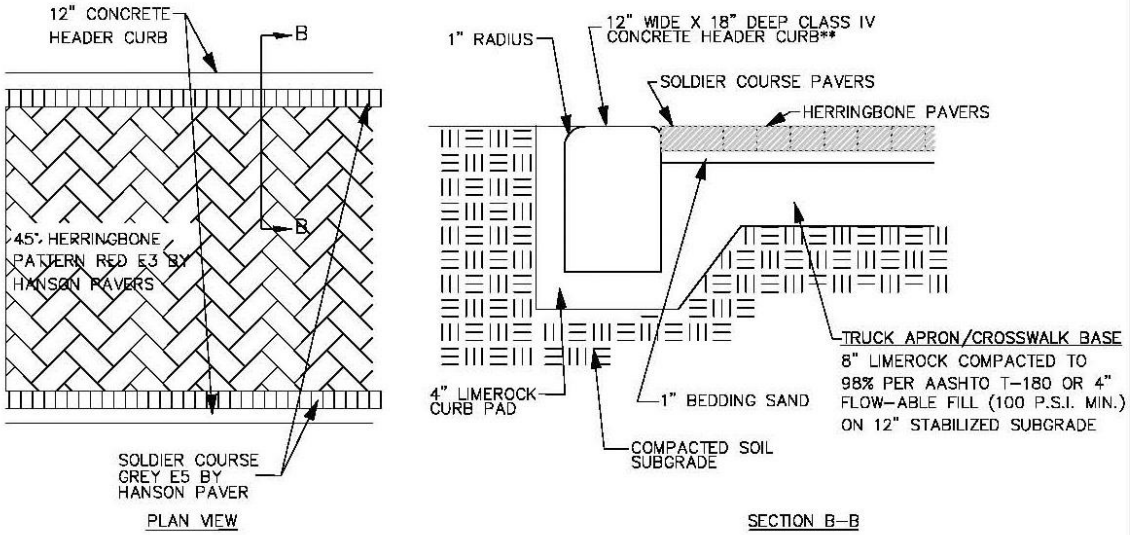

NOTES:

1. BEDDING SAND TO CONFORM TO ASTM C 33, COMMONLY KNOWN AS MANUFACTURED CONCRETE SAND. DO NOT USE MASONRY SAND.
2. PROVIDE SAWED CONTRACTION JOINTS AT 10' CENTERS (MAX.) NO LATER THAN 12 HOURS AFTER THE CONCRETE TAKES INITIAL SET. COMPARABLE TOOLED JOINTS MAY BE PROVIDED IN LIEU OF SAWED JOINTS.
3. AT THE TRUCK APRON, THE TYPE D AND TYPE RA CURBS SERVES IN PLACE OF THE HEADER CURB SHOWN HERE.

BRICK DETAILS FOR CROSSWALK AND TRUCK APRON

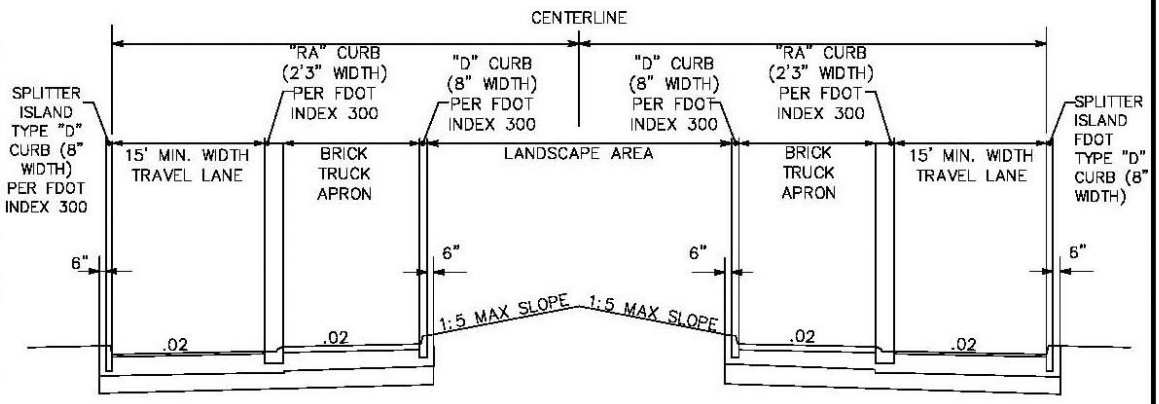

SECTION A-A

TYPICAL SECTION AT CENTER OF ROUNDABOUT

	STANDARD ENGINEERING DETAILS & SPECIFICATIONS **ROUNDABOUT DETAIL - SECTIONS**			
	CITY OF WESTON, FLORIDA PUBLIC WORKS AND UTILITIES 2599 SOUTH POST ROAD, WESTON, FL 33327 TELEPHONE: 954-385-2600 FAX: 954-385-2610	DATE Feb. 2010	SCALE N.T.S.	DRAWING NO. **R-23B**

DRAINAGE SPECIFICATIONS AND DETAILS

§127.40 STORM DRAINAGE

127.40 (A) ***General.***

127.40 (A)(1) Catch basin grates and rim elevations as shown on plans may be adjusted to conform to new or existing grades after approval from the Engineer of Record is obtained who shall consult with the City prior to any adjustment.

127.40 (A)(2) Distances and lengths shown on plans and profile drawings shall be referenced to the center of structures.

127.40 (A)(3) All catch basin grates shall be oriented to align with centerline or radius of drive.

127.40 (B) ***Materials.***

127.40 (B)(1) Reinforced concrete pipe for storm Sewer shall conform to ASTM L70, Table III, Wall B, or latest revision. All pipes shall have modified tongue and groove joints, and have rubber gaskets, unless otherwise specified.

127.40 (B)(2) Corrugated aluminum pipe shall be helical type, manufactured in conformance with ASTM B-209 and AASHTO M-193, as manufactured by Kaiser Aluminum, Inc., or approved equal. The corrugation pattern and gauge shall be as follows:

DIAMETER	CORRUGATION	GAUGE
12″ x 21″	2 2/3″ x 1/2″	16
24″ x 27″	2 2/3″ x 1/2″	16
30″	2 2/3″ x 1 1/2″	14
36″ x 54″	3″ x 1″	14
60″ x 72″	3″ x 1″	12

127.40 (B)(3) Pipe couplings for corrugated aluminum pipe shall be a minimum of 12″ wide and 24″ wide for 60″ diameter or larger. Split bands of the same alloy as the pipe, and may be one gauge lighter than the pipe. Polyurethane or other manufacturer supplied sealant shall be used with the couplings.

127.40 (B)(4) The rip rap headwalls, which will be provided on an as needed basis, shall be constructed of sand/cement with a minimum 2000 PSI compressive strength to meet FDOT standards. The bags shall be permeable burlap, cloth or paper. A concrete cap shall be poured on top of sand/cement rip rap bags with a minimum of 3000 psi compression strength.

127.40 (B)(5) All drainage structures shall be precast concrete as manufactured by U.S. Precast Corporation, or approved equal. Block catch basins will be allowed only with approval of the Engineer. The minimum wall and slab thickness shall be 8 inches and the

minimum reinforcing shall be No. 4 bars at 12 inches each way, unless otherwise indicated. Concrete shall be minimum compressed strength of 3500 PSI at 28 days.

127.40 (C) ***Installation.***

127.40 (C)(1) Pipe shall be placed on stable granular material, free of rock formation, other foreign formations, and constructed to uniform grade and line.

127.40 (C)(2) Backfill material shall be well graded granular material, well tamped in layers, not to exceed 6 inches.

127.40 (C)(3) Provide a minimum protective cover of 18 inches over storm Sewer and avoid unnecessary crossing by heavy construction vehicles during construction.

127.40 (C)(4) The contractor shall notify the local water control district at least 24 hours prior to the start of the construction and inspection.

127.40 (D) ***Storm Drainage pre-treatment/exfiltration system.***

127.40 (D)(1) Any conflict with existing or proposed utilities shall immediately be brought to the attention of the City Engineer. Any impermeable material encountered in the excavation for the drainfield shall be removed as directed by the City Engineer.

127.40 (D)(2) The trench liner shall be used on the sides and top of a drainfield ditch. The top section of the material shall be lapped a minimum of 24 inches and the contractor shall take extreme care in backfilling to avoid bunching of the fabric.

127.40 (D)(3) Perforated pipe within the drainfield shall have 3/8 inch perforations 360° around the pipe with approximately 120 perforations per foot of pipe.

127.40 (D)(4) Perforated pipe shall terminate 5 feet from the drainage structure. The remaining 5 feet shall be non-perforated pipe.

127.40 (D)(5) Pipes shall terminate at an additional catch basin or a clean-out structure.

§127.41 DESIGN CRITERIA

127.41 (A) ***Site location.*** The Applicant shall indicate the location, zoning, land use and points of discharge.

127.41 (B) ***Water quantity.*** Each water management system is to be designed to act as part of the overall basin system. During a design storm event the discharge from each project will be controlled or limited by the available capacity of the receiving City water body. Discharge control structures with a pollution retardant baffle will be required for all individual projects.

127.41 (C) ***Water quality.***

127.41 (C)(1) Retention/Detention Criteria
Retention/detention in the overall system, including Swales, lakes, canals, etc., shall be a modification of the following SFWMD Permits:

Indian Trace Development District
Permit No. 06-0079-S
Application No.: 070815-3
Drainage Basin: C-11 West
SFWMD Receiving Body: C-11 West Canal

Bonaventure Development District
Permit No. 06-0067-S
Application No.: 070213-17
Drainage Basin: North New River
SFWMD Receiving Body: North New River

127.41 (C)(2) Underground Exfiltration Systems
Underground exfiltration systems shall be in accordance with the latest SFWMD requirements as described in "Design of Exfiltration Trenches to Meet SFWMD Regulatory Criteria".

127.41 (D) ***Finished floor.*** All habitable structures shall not be lower than 1 foot above the 100 Year flood elevation, as determined from the DERD 100 Year flood elevation map; Federal Flood Insurance Rate Maps (as shown on "Floodways and Base Flood Elevations Map"; engineer's flood elevation; or 8 inches above the adjacent crown of road for commercial or 6 inches above the crown of road for residential.

127.41 (E) ***Storm Sewers.*** Storm Sewer designs shall be in accordance with the Florida Department of Transportation Zone 10 Rainfall Intensity-Duration-Frequency Curves (IDF Curves and SFWMD) published design criteria and computational methods (latest edition).

127.41 (F) ***Best management practice***. The Best Management Practice for water pollution control through stormwater and wetland management shall be in accordance with the latest edition National Pollution Discharge Elimination System and the latest edition of the FDEP Erosion and Sediment Control Criteria.

127.41 (G) ***Road crown.*** All Roadways and parking lots (public and private) shall have a minimum crown elevation or edge of pavement of inverted crown shall be the greater of the DERD 10 Year Criteria Map; engineer's 10 Year 1- day elevation; or as indicated on the "Drainage Basins" Map.

127.41 (H) ***Grading.*** Final grades shall slope shall be away from structures and drain toward the onsite drainage inlets and collection system. A grading plan shall be prepared and submitted to the City/ITDD/BDD. Said plan shall clearly indicate that no runoff from the Applicant's project shall discharge or flow onto adjacent property or into Public Property. The

minimum slope for Roadways shall be 0.5% and 1% for Roadway Swales. The maximum run between high points and low points shall be 300 feet.

127.41 (I) ***Permit elevations.*** The City maintains two stormwater development districts that are subdivided into several basins and sub-basins as shown on *Map ID: W-10-24.1, The City Drainage Basin. Control Elevations and minimum Crown of Road elevations shown in the Table below is a summary of the SFWMD permit requirements and shall be maintained for any new permits or permit modifications.*

Area	Control Elevation	Crown of Road
Indian Trace Dev. District		
Basin No. 1		
Increment I	4.5	6.9
Increment II	4.5	6.9
Increment II Mitigation	6.0	NA
Increment III	5.0	6.9
Increment III Mitigation	7.7	
Basin No. 2	4.5	6.5
Basin No. 3	4.5	6.9
Bonaventure Dev. District		
WLWCD	4.5	6.8

§127.42 LAKES AND WATERWAYS

127.42 (A) ***Lake maintenance.***

127.42 (A)(1) All property Owners whose property abuts a lake within the City shall be required to remove all trees, shrubs, bushes, structures, docks, fences and/or any other such unpermitted obstruction along the lake maintenance easement.

127.42 (A)(2) All property Owners found to not be in compliance with subsection (1) above shall receive notice from the City, by regular mail, notifying them that they are not in compliance with this Ordinance and notifying them that they shall comply with the terms hereof within 90 days from the date of the notice. Property Owners may apply to the City within that 90 day compliance period for an additional 90 days to come into compliance.

127.42 (A)(3) Failure to comply shall result in the removal or destruction of all obstruction(s) by the City without liability or responsibility.

127.42 (B) ***Waterways.***

127.42 (B)(1) *Design Standards:*

127.42 (B)(1)(a) Development proposals containing proposed lakes/canals shall supply written conceptual approval from the SFWMD (if applicable FDEP, Department of Natural Resources, and/or Army Corps of Engineers along with the application for development proposal. Should lakes/canals be approved, construction shall be in accordance with the provisions of the applicable regulatory agency.

127.42 (B)(1)(b) All development shall meet the requirements of DERD and SFWMD to control stormwater runoff, for the purpose of preventing flooding in adjacent areas, or pollution of water bodies.

127.42 (B)(1)(c) Where a development proposal includes provisions for deposit of fill, shores resulting from such deposition shall not exceed a slope of 4 horizontal to 1 vertical above 3 feet below the design water elevation.

127.42 (B)(1)(d) After construction, natural vegetation shall be retained or replaced on the site in order to minimize and stabilize erosion and decrease pollution of the water body.

127.42 (B)(1)(e) For lots or parcels which are cleared adjacent to water bodies, silt screens shall be placed between the construction site and the water body to prevent erosion and siltation.

127.42 (B)(1)(f) No waterway or portion thereof shall be created within a public road Right-Of-Way or within reservations dedicated for Roadway purposes.

127.42 (B)(2) Permit Required

127.42 (B)(2)(a) No waterway shall be created unless a permit for same has been first approved in writing by the City Engineer.

127.42 (B)(2)(b) Application for such approval shall be made to the City Engineer, by letter, or upon such form as shall be prescribed, stating the reason for alteration or construction of the waters. This letter shall be accompanied by five sets of plans prepared by an Engineer showing the location proposed cross-sections, structures in or across the waterway, and other details as may be required by the City Engineer.

127.42 (B)(2)(c) The City Engineer shall inspect waterways and all structures in or across any waterway during their construction period. As-built drawings shall be submitted to the City Engineer upon completion of all work in or across the waterway with as-built cross-sections of the waterway every 100 feet, or as often as may be necessary to determine the change in cross-section area.

127.42 (B)(3) Waterway Use

127.42 (B)(3)(a) No firm or corporation shall obstruct any public waterway within the City by any means whatever.

127.42 (B)(3)(b) No Person shall allow or permit any material to wash, run or flow from property owned by or under the control of any such Person into any public waterway within the City in such a way that the waterway shall thereby become obstructed or polluted.

§127.43 STANDARD DRAINAGE DETAILS

Detail No.	Description
D-1	Storm Sewer Manhole Frame and Cover
D-2	Inlet, Manhole & Junction Box, Type J
D-3	Inlet, Manhole & Junction Box, Type J
D-4	Inlet, Manhole & Junction Box, Type P
D-5	Inlet, Manhole & Junction Box, Types P & J, General Notes
D-6	Junction Box, Manhole Top & Precast Concrete Riser
D-7	Storm Sewer Inlets
D-8	Concrete to Metal Pipe Jacket
D-9	Pollution Retardant Baffle
D-10	Exfiltration Trench
D-11	Typical Section, Lake Culvert Outfall
D-12	Typical Lake Section

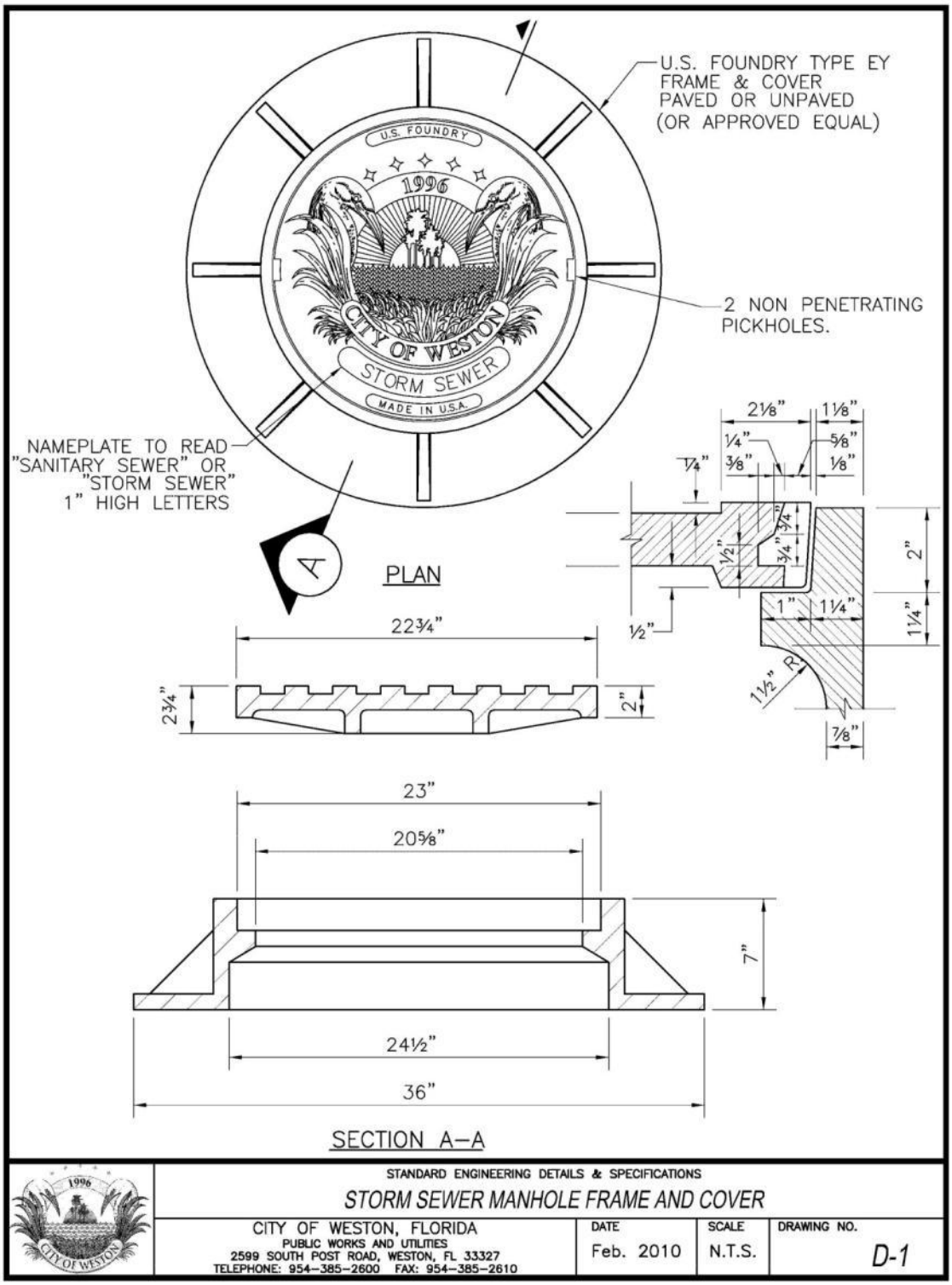
U.S. FOUNDRY TYPE EY
FRAME & COVER
PAVED OR UNPAVED
(OR APPROVED EQUAL)
U.S. FOUNDRY
1996
CITY OF WESTON
STORM SEWER
MADE IN U.S.A.
2 NON PENETRATING
PICKHOLES.
NAMEPLATE TO READ
"SANITARY SEWER" OR
"STORM SEWER"
1" HIGH LETTERS
A
PLAN
2⅛"
1⅛"
¼"
⅝"
⅜"
⅛"
¼"
½"
¾"
¾"
2"
1"
1¼"
1¼"
½"
1½" R
⅞"
22¾"
2¾"
2"
23"
20⅝"
7"
24½"
36"
SECTION A–A
STANDARD ENGINEERING DETAILS & SPECIFICATIONS
STORM SEWER MANHOLE FRAME AND COVER
CITY OF WESTON, FLORIDA
PUBLIC WORKS AND UTILITIES
2599 SOUTH POST ROAD, WESTON, FL 33327
TELEPHONE: 954–385–2600 FAX: 954–385–2610
DATE
Feb. 2010
SCALE
N.T.S.
DRAWING NO.
D-1

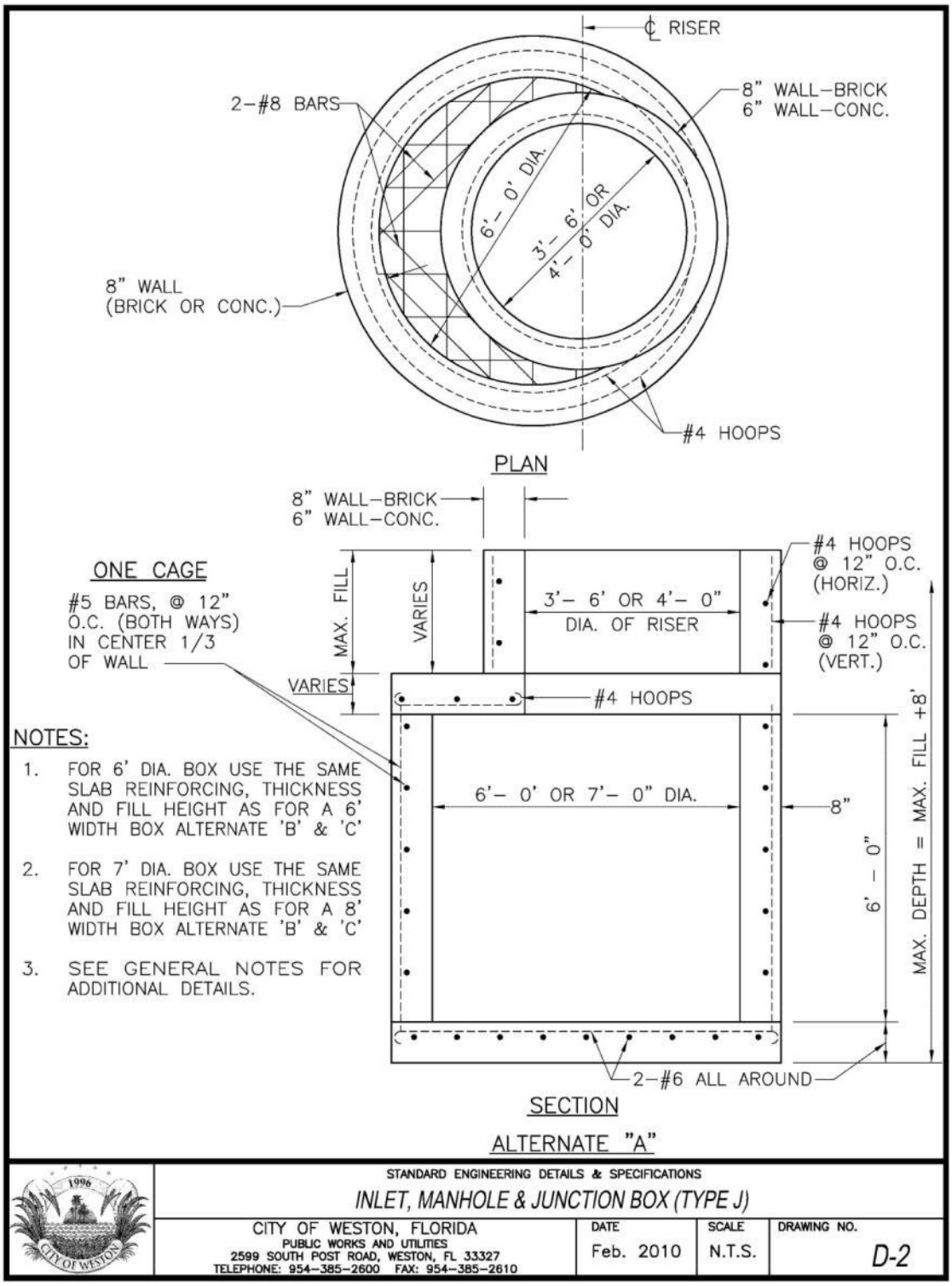
℄ RISER
2-#8 BARS
8" WALL-BRICK
6" WALL-CONC.
6'- 0' DIA.
3'- 6' OR
4'- 0' DIA.
8" WALL
(BRICK OR CONC.)
#4 HOOPS
PLAN
8" WALL-BRICK
6" WALL-CONC.
ONE CAGE
#5 BARS, @ 12" O.C. (BOTH WAYS) IN CENTER 1/3 OF WALL
MAX. FILL
VARIES
VARIES
3'- 6' OR 4'- 0"
DIA. OF RISER
#4 HOOPS @ 12" O.C. (HORIZ.)
#4 HOOPS @ 12" O.C. (VERT.)
#4 HOOPS
6'- 0' OR 7'- 0" DIA.
8"
6' - 0"
MAX. DEPTH = MAX. FILL +8'
2-#6 ALL AROUND
SECTION
ALTERNATE "A"
NOTES:
1. FOR 6' DIA. BOX USE THE SAME SLAB REINFORCING, THICKNESS AND FILL HEIGHT AS FOR A 6' WIDTH BOX ALTERNATE 'B' & 'C'
2. FOR 7' DIA. BOX USE THE SAME SLAB REINFORCING, THICKNESS AND FILL HEIGHT AS FOR A 8' WIDTH BOX ALTERNATE 'B' & 'C'
3. SEE GENERAL NOTES FOR ADDITIONAL DETAILS.
STANDARD ENGINEERING DETAILS & SPECIFICATIONS
INLET, MANHOLE & JUNCTION BOX (TYPE J)
CITY OF WESTON, FLORIDA
PUBLIC WORKS AND UTILITIES
2599 SOUTH POST ROAD, WESTON, FL 33327
TELEPHONE: 954-385-2600 FAX: 954-385-2610
DATE
Feb. 2010
SCALE
N.T.S.
DRAWING NO.
D-2

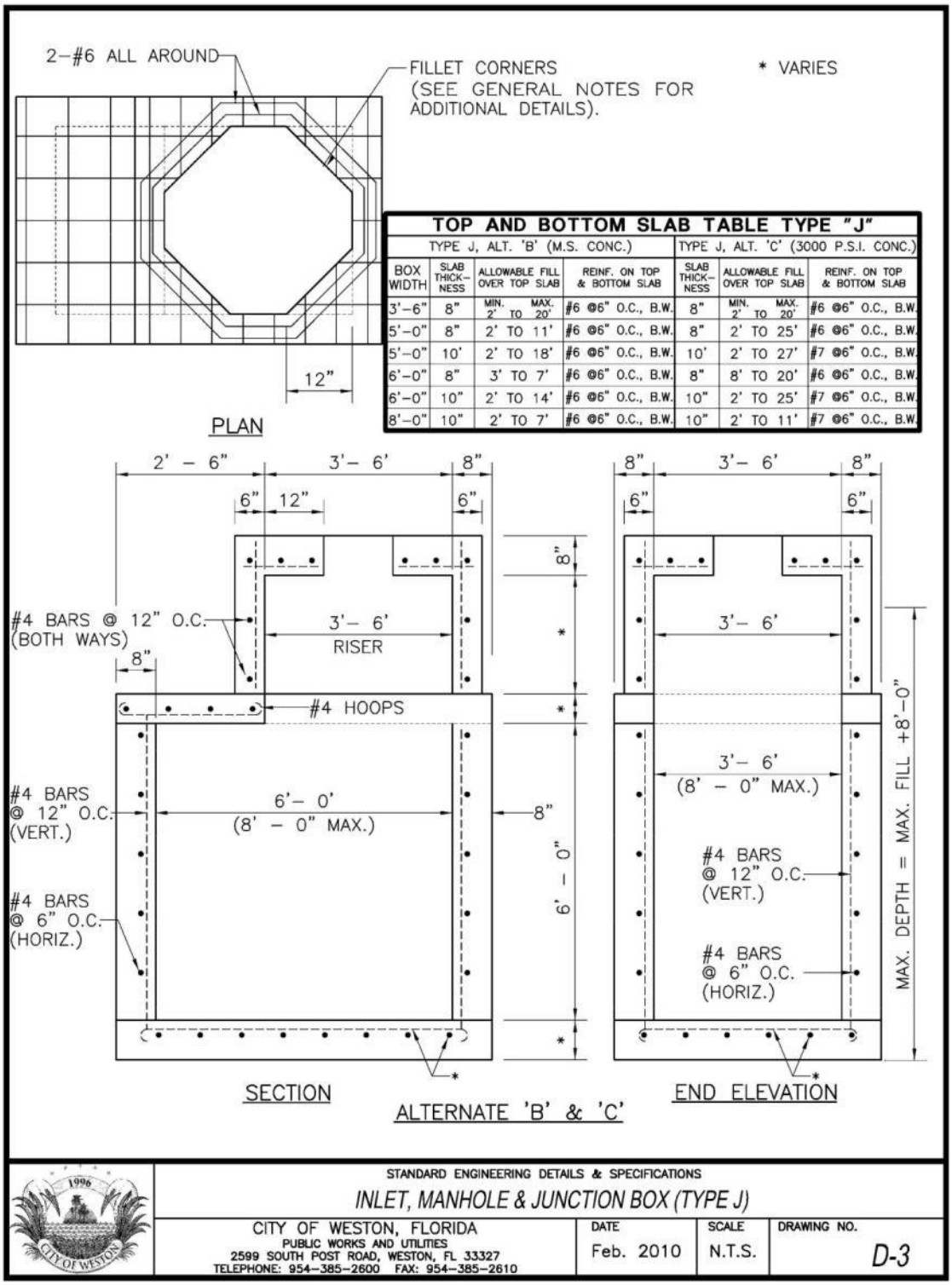

TOP AND BOTTOM SLAB TABLE TYPE "J"

TYPE J, ALT. 'B' (M.S. CONC.)				TYPE J, ALT. 'C' (3000 P.S.I. CONC.)		
BOX WIDTH	SLAB THICK-NESS	ALLOWABLE FILL OVER TOP SLAB	REINF. ON TOP & BOTTOM SLAB	SLAB THICK-NESS	ALLOWABLE FILL OVER TOP SLAB	REINF. ON TOP & BOTTOM SLAB
3'–6"	8"	MIN. 2' TO MAX. 20'	#6 @6" O.C., B.W.	8"	MIN. 2' TO MAX. 20'	#6 @6" O.C., B.W.
5'–0"	8"	2' TO 11'	#6 @6" O.C., B.W.	8"	2' TO 25'	#6 @6" O.C., B.W.
5'–0"	10'	2' TO 18'	#6 @6" O.C., B.W.	10'	2' TO 27'	#7 @6" O.C., B.W.
6'–0"	8"	3' TO 7'	#6 @6" O.C., B.W.	8"	8' TO 20'	#6 @6" O.C., B.W.
6'–0"	10"	2' TO 14'	#6 @6" O.C., B.W.	10"	2' TO 25'	#7 @6" O.C., B.W.
8'–0"	10"	2' TO 7'	#6 @6" O.C., B.W.	10"	2' TO 11'	#7 @6" O.C., B.W.

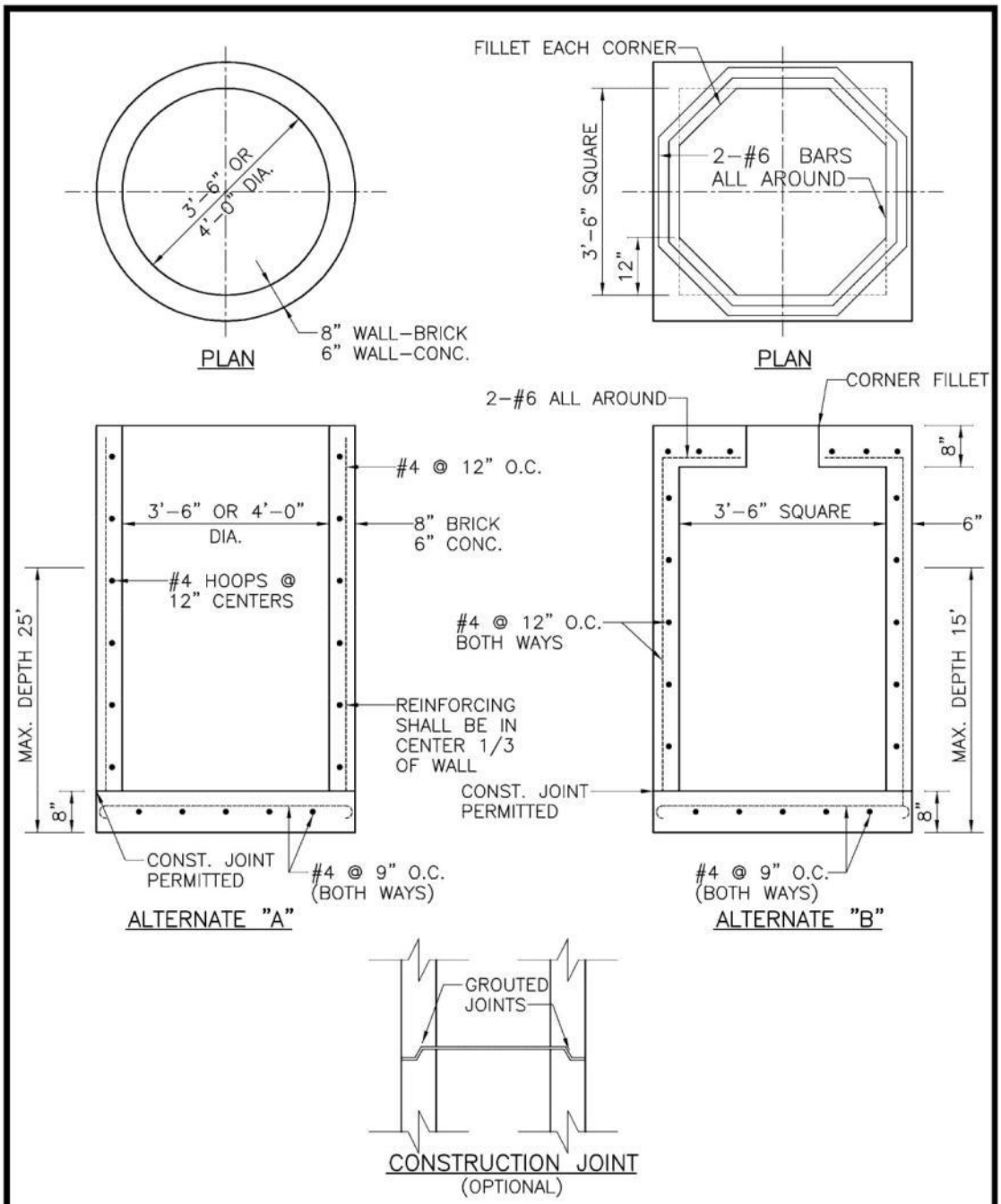

	STANDARD ENGINEERING DETAILS & SPECIFICATIONS *INLET, MANHOLE & JUNCTION BOX (TYPE P)*			
	CITY OF WESTON, FLORIDA PUBLIC WORKS AND UTILITIES 2599 SOUTH POST ROAD, WESTON, FL 33327 TELEPHONE: 954-385-2600 FAX: 954-385-2610	DATE Feb. 2010	SCALE N.T.S.	DRAWING NO. *D-4*

GENERAL NOTES:

1. CIRCULAR STRUCTURES (ALTERNATES 'A') AND RECTANGULAR STRUCTURES (ALTERNATES 'B' & 'C') SHALL BE CONSTRUCTED OF CONCRETE ONLY. THE CONCRETE MAY BE CAST-IN-PLACE OR PRECAST.

2. WALL REINFORCEMENT AND THICKNESS ARE FOR EITHER CAST-IN-PLACE OR PRECAST CONCRETE EXCEPT THAT FOR PRECAST CIRCULAR UNITS A.S.T.M. SPECIFICATIONS C-76, TABLE III, FOR B WALL REINFORCED CONCRETE PIPE OR PRECAST CIRCULAR UNITS IN ACCORDANCE WITH ASTM SPECIFICATION C-478 WILL BE ACCEPTABLE. TOP AND FLOOR SLAB THICKNESS AND REINFORCEMENT ARE FOR ALL TYPES OF CONSTRUCTION.

3. PRECAST TOP AND/OR FLOOR SLABS MAY BE OF THE SAME CONCRETE AS SPECIFIED IN ASTM SPECIFICATIONS C-478 FOR PRECAST CIRCULAR UNITS.

4. STRUCTURES SHALL BE SECURED TO INLET THROATS, RISERS OR MANHOLE TOPS WITH A MINIMUM OF 6-No. 4 BARS 12" LONG.

5. ANY INLET, MANHOLE, OR JUNCTION BOX MAY BE USED IN CONJUNCTION WITH ANY INLET THROAT OR MANHOLE TOP.

6. MORTAR USED TO SEAL THE PIPE IN THE WALLS OF THE PRECAST UNITS SHALL BE OF SUCH A MIX THAT SHRINKAGE WILL NOT CAUSE LEAKAGE INTO OR OUT OF THE UNITS. MAXIMUM OPENING FOR PIPE SHALL BE MAXIMUM REQUIRED O.D. + 6".

7. THE OUTSIDE OF BRICK WALLS SHALL BE PLASTERED WITH 1:2 CEMENT MORTAR.

	STANDARD ENGINEERING DETAILS & SPECIFICATIONS *INLET, MANHOLE, & JUNCT. BOX*			
	CITY OF WESTON, FLORIDA PUBLIC WORKS AND UTILITIES 2599 SOUTH POST ROAD, WESTON, FL 33327 TELEPHONE: 954-385-2600 FAX: 954-385-2610	DATE Feb. 2010	SCALE N.T.S.	DRAWING NO. *D-5*

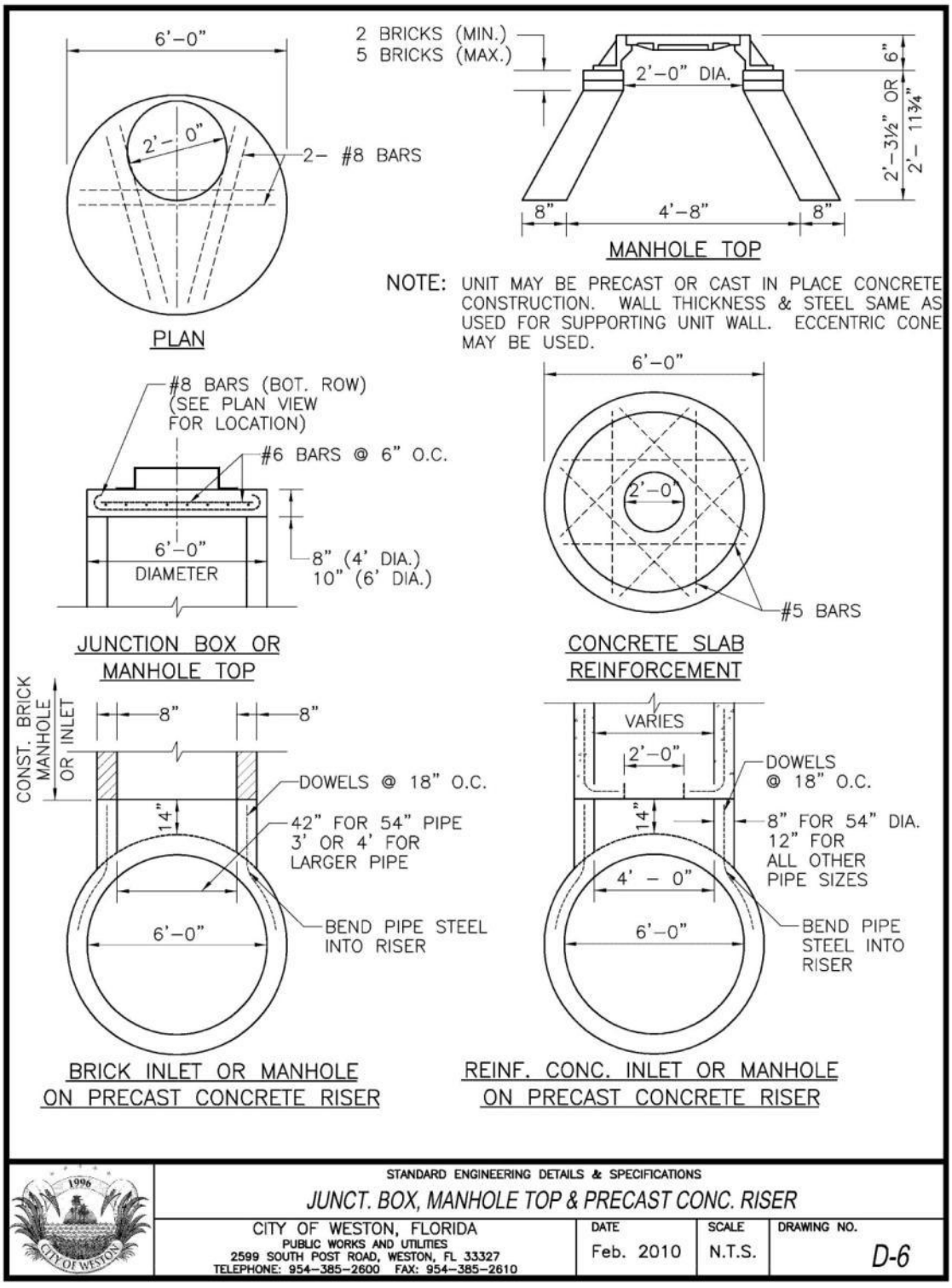
6'-0"
2'-0"
2- #8 BARS
PLAN
2 BRICKS (MIN.)
5 BRICKS (MAX.)
2'-0" DIA.
6"
2'-3½" OR
2'-11¾"
8"
4'-8"
8"
MANHOLE TOP
NOTE: UNIT MAY BE PRECAST OR CAST IN PLACE CONCRETE CONSTRUCTION. WALL THICKNESS & STEEL SAME AS USED FOR SUPPORTING UNIT WALL. ECCENTRIC CONE MAY BE USED.
#8 BARS (BOT. ROW)
(SEE PLAN VIEW
FOR LOCATION)
#6 BARS @ 6" O.C.
6'-0"
DIAMETER
8" (4' DIA.)
10" (6' DIA.)
JUNCTION BOX OR
MANHOLE TOP
6'-0"
2'-0"
#5 BARS
CONCRETE SLAB
REINFORCEMENT
CONST. BRICK
MANHOLE
OR INLET
8"
8"
DOWELS @ 18" O.C.
14"
42" FOR 54" PIPE
3' OR 4' FOR
LARGER PIPE
6'-0"
BEND PIPE STEEL
INTO RISER
BRICK INLET OR MANHOLE
ON PRECAST CONCRETE RISER
VARIES
2'-0"
DOWELS
@ 18" O.C.
14"
8" FOR 54" DIA.
12" FOR
ALL OTHER
PIPE SIZES
4' - 0"
6'-0"
BEND PIPE
STEEL INTO
RISER
REINF. CONC. INLET OR MANHOLE
ON PRECAST CONCRETE RISER
1996
CITY OF WESTON
STANDARD ENGINEERING DETAILS & SPECIFICATIONS
JUNCT. BOX, MANHOLE TOP & PRECAST CONC. RISER
CITY OF WESTON, FLORIDA
PUBLIC WORKS AND UTILITIES
2599 SOUTH POST ROAD, WESTON, FL 33327
TELEPHONE: 954-385-2600 FAX: 954-385-2610
DATE
Feb. 2010
SCALE
N.T.S.
DRAWING NO.
D-6

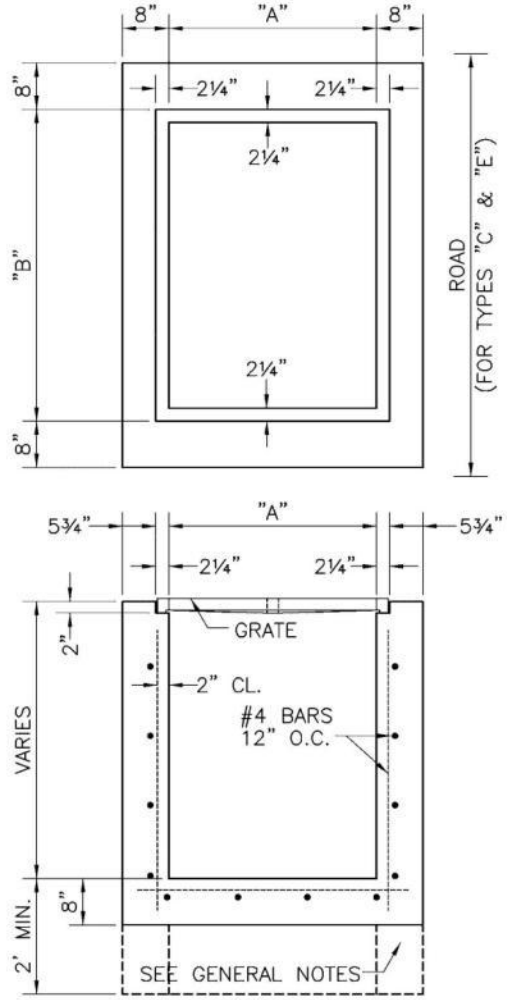

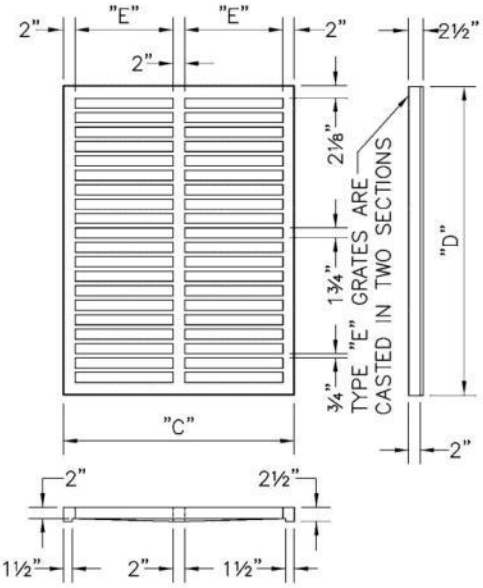

TYPE INLET	DIMENSIONS					MAX. SIZE R.C.P.
	"A"	"B"	"C"	"D"	"E"	
"C"	2'-0"	3'-1"	2'-4"	3'-0"	11"	18"
"E"	3'-0"	4'-6"	3'-4"	4'-4"	1'-5"	30"
"E MOD" *	3'-0"	4'-6"	3'-4"	4'-4"	1'-5"	48"

NOTE: SEE STD. PLAN FOR DETAILS WHEN USING THIS TYPE INLET WITH VALLEY GUTTER ROAD SECTIONS.

BEVELED EDGES:
ALL EXPOSED CORNERS AND EDGES TO BE CHAMFERED ¾".

FOUNDATION MATERIAL:
WHERE MATERIAL UNSATISFACTORY FOR FOUNDATION IS ENCOUNTERED AT FLOW LINE, OMIT FLOOR AND CARRY WALLS DOWN TO SATISFACTORY FOUNDATION. BACKFILL TO FLOW LINE WITH CLEAN SAND.

GRATES:
CAST IRON GRATES IN ACCORDANCE WITH FLA. D.O.T. SPECS.

* INLET TYPES:
INLETS ARE TO BE AS SHOWN HEREON. TYPE "E MOD." IS A TYPE "E" TURNED 90° TO RECEIVE R.C.P. UP TO 48" DIA. INLETS RECEIVING R.C.P. LARGER THAN 48" DIA. SHALL BE IN ACCORDANCE WITH FLA. D.O.T. STANDARDS.

MATERIAL:
INLET WALLS AND FOOTING MAY EITHER BE POURED-IN-PLACE 2500 LB. CONC.; OR PRECAST CLASS "A" 3000 L.B. CONC.; OR STANDARD MANHOLE BRICK (NO BLOCK) WITH ½" PLASTER (NO LIME) WITH 8" PRECAST CAP.

STANDARD ENGINEERING DETAILS & SPECIFICATIONS

STORM SEWER INLETS (TYPES C & E)

CITY OF WESTON, FLORIDA
PUBLIC WORKS AND UTILITIES
2599 SOUTH POST ROAD, WESTON, FL 33327
TELEPHONE: 954-385-2600 FAX: 954-385-2610

DATE	SCALE	DRAWING NO.
Feb. 2010	N.T.S.	D-7

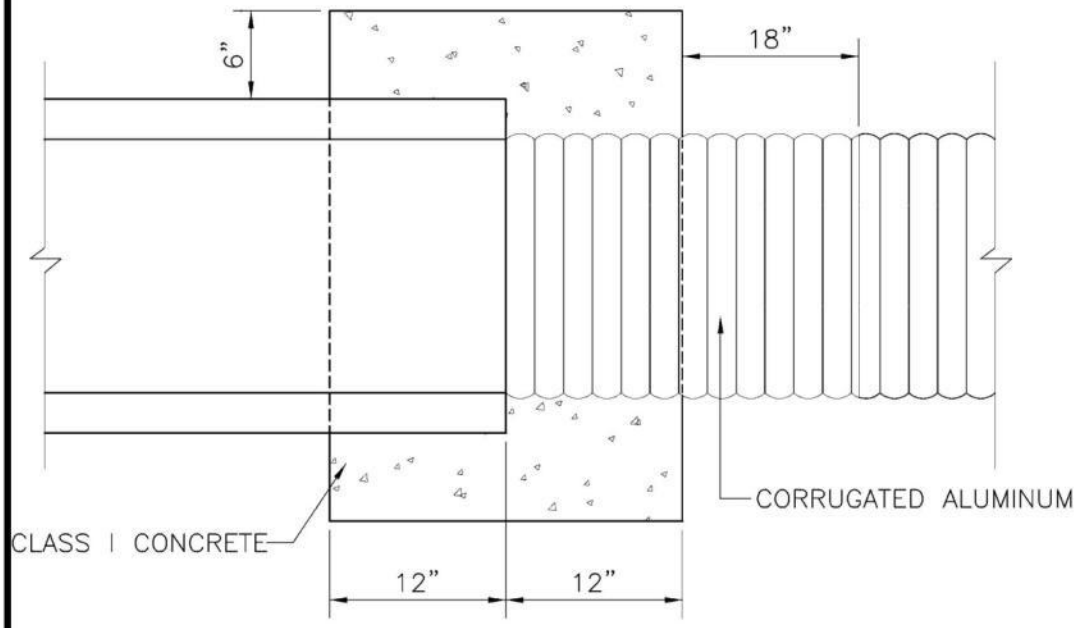

STANDARD ENGINEERING DETAILS & SPECIFICATIONS

CONCRETE TO METAL PIPE JACKET

CITY OF WESTON, FLORIDA PUBLIC WORKS AND UTILITIES 2599 SOUTH POST ROAD, WESTON, FL 33327 TELEPHONE: 954-385-2600 FAX: 954-385-2610	DATE	SCALE	DRAWING NO.
	Feb. 2010	N.T.S.	D-8

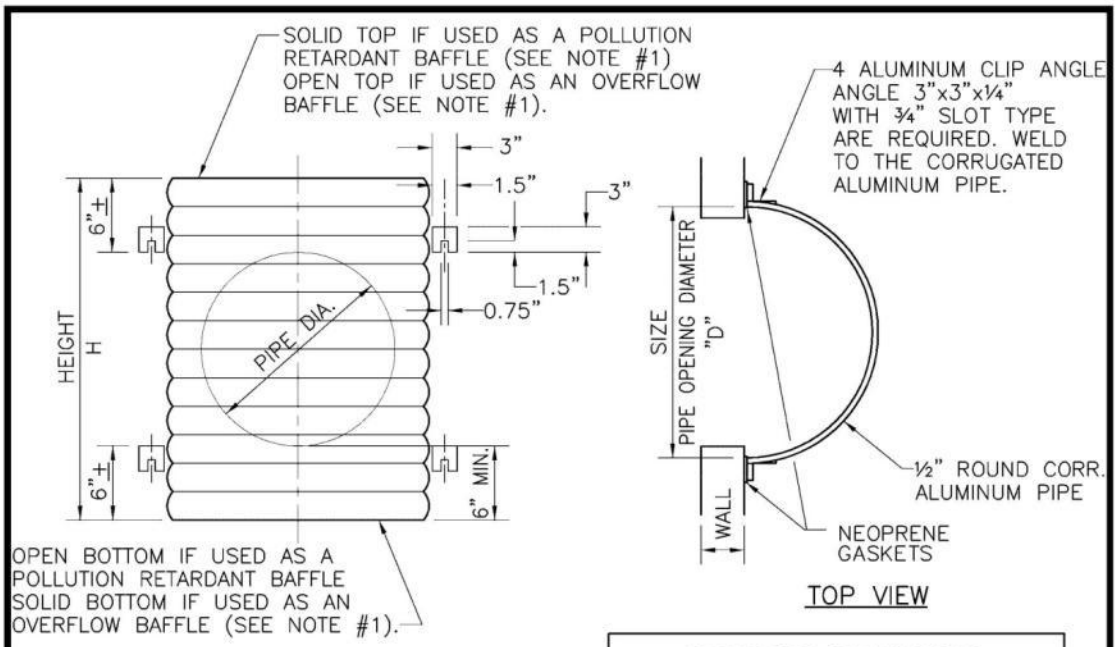

FRONT VIEW

TOP VIEW

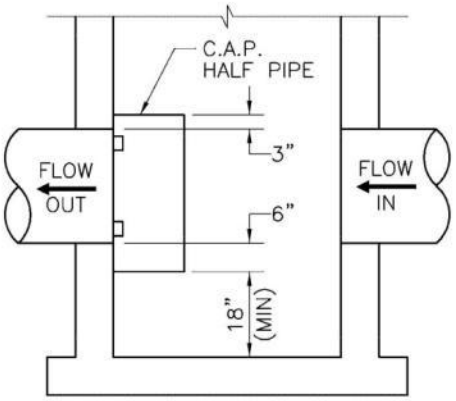

SIDE VIEW

STANDARD DIMENSIONS			
PIPE DIA.	D (INCHES)	T (GAUGE)	H (INCHES)
15"	27"	16	24"
18"	30"	16	27"
24"	36"	16	33"

NOTES:

1. ALUMINUM SHEET OF SAME THICKNESS (GAUGE) AS PIPE SHALL BE WELDED TO CLOSE OPENING.
2. BAFFLE SHALL BE AS MANUFACTURED BY SOUTHERN CULVERT OR ENGINEER'S APPROVED EQUAL.
3. NEOPRENE GASKET (⅜" X 2") SHALL BE INSTALLED AT ALL BAFFLES.

STANDARD ENGINEERING DETAILS & SPECIFICATIONS

POLLUTION RETARDANT BAFFLE

CITY OF WESTON, FLORIDA
PUBLIC WORKS AND UTILITIES
2599 SOUTH POST ROAD, WESTON, FL 33327
TELEPHONE: 954-385-2600 FAX: 954-385-2610

DATE	SCALE	DRAWING NO.
Feb. 2010	N.T.S.	D-9

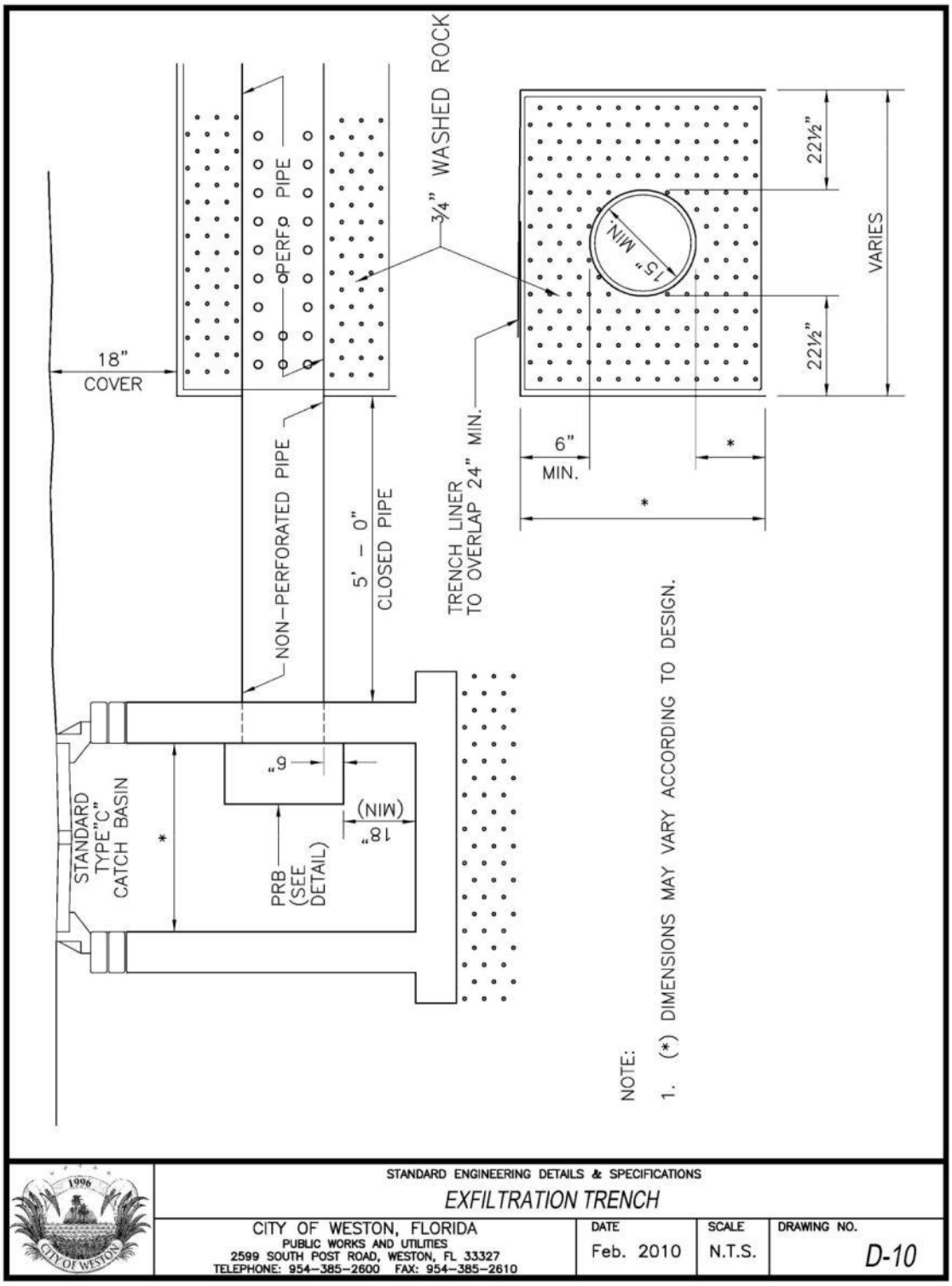
18"
COVER
NON-PERFORATED PIPE
5' – 0"
CLOSED PIPE
PERF. PIPE
3/4" WASHED ROCK
TRENCH LINER
TO OVERLAP 24" MIN.
15" MIN.
22½"
22½"
VARIES
6"
MIN.
*
*
STANDARD
TYPE "C"
CATCH BASIN
*
6"
18"
(MIN)
PRB
(SEE
DETAIL)
NOTE:
1. (*) DIMENSIONS MAY VARY ACCORDING TO DESIGN.
STANDARD ENGINEERING DETAILS & SPECIFICATIONS
EXFILTRATION TRENCH
CITY OF WESTON, FLORIDA
PUBLIC WORKS AND UTILITIES
2599 SOUTH POST ROAD, WESTON, FL 33327
TELEPHONE: 954-385-2600 FAX: 954-385-2610
DATE
Feb. 2010
SCALE
N.T.S.
DRAWING NO.
D-10

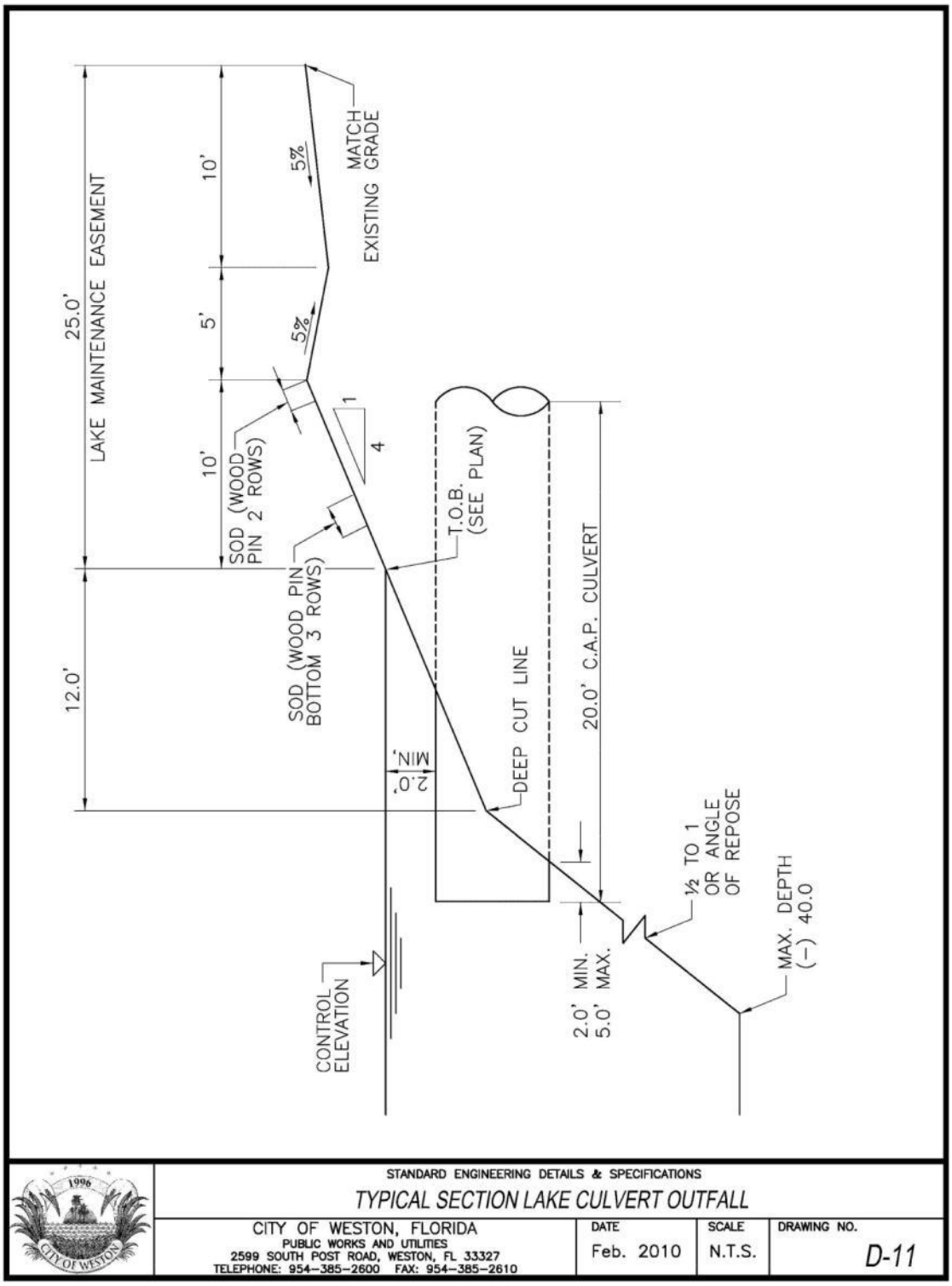
25.0'
LAKE MAINTENANCE EASEMENT
10'
5'
10'
12.0'
5%
5%
MATCH GRADE
EXISTING GRADE
1
4
SOD (WOOD PIN 2 ROWS)
SOD (WOOD PIN BOTTOM 3 ROWS)
T.O.B. (SEE PLAN)
DEEP CUT LINE
2.0' MIN.
20.0' C.A.P. CULVERT
CONTROL ELEVATION
2.0' MIN.
5.0' MAX.
½ TO 1 OR ANGLE OF REPOSE
MAX. DEPTH (–) 40.0
STANDARD ENGINEERING DETAILS & SPECIFICATIONS
TYPICAL SECTION LAKE CULVERT OUTFALL
CITY OF WESTON, FLORIDA
PUBLIC WORKS AND UTILITIES
2599 SOUTH POST ROAD, WESTON, FL 33327
TELEPHONE: 954-385-2600 FAX: 954-385-2610
DATE
Feb. 2010
SCALE
N.T.S.
DRAWING NO.
D-11

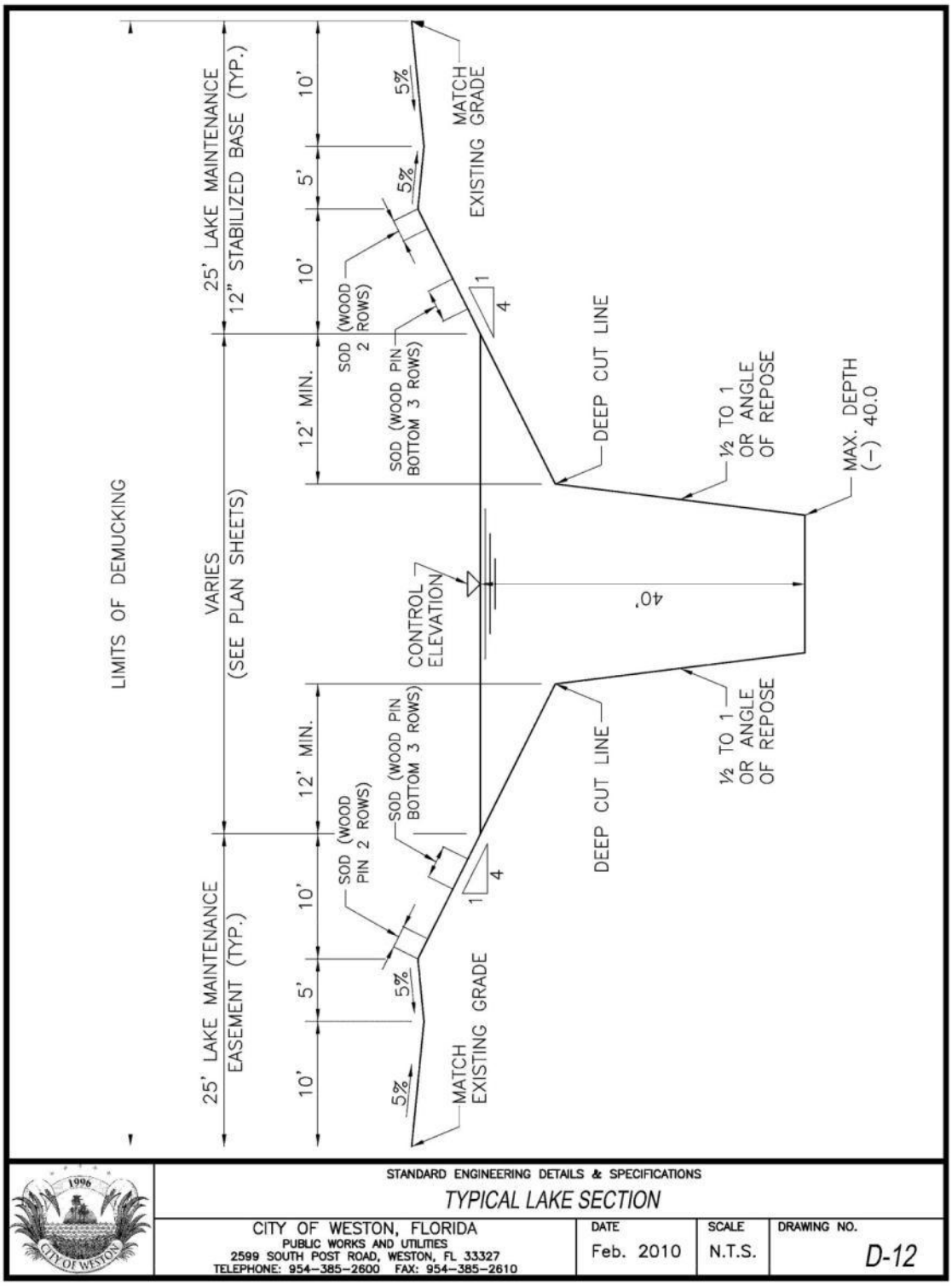

	STANDARD ENGINEERING DETAILS & SPECIFICATIONS *TYPICAL LAKE SECTION*			
	CITY OF WESTON, FLORIDA PUBLIC WORKS AND UTILITIES 2599 SOUTH POST ROAD, WESTON, FL 33327 TELEPHONE: 954-385-2600 FAX: 954-385-2610	DATE Feb. 2010	SCALE N.T.S.	DRAWING NO. *D-12*

§127.44 CITY DRAINAGE MAPS

Detail No.	Description
M-1	Drainage Basins
M-2	Floodways and Base flood Elevations

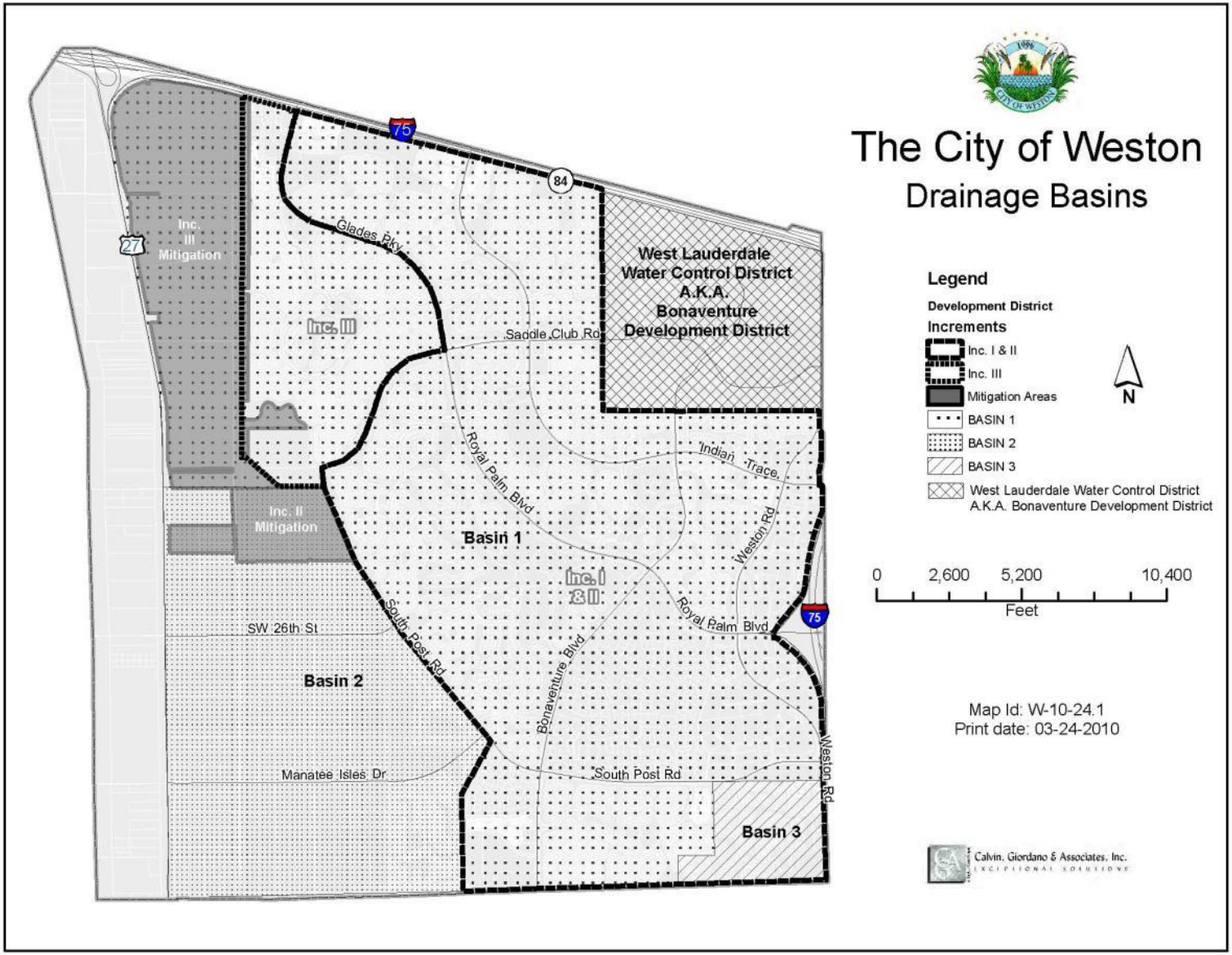
The City of Weston
Drainage Basins
Legend
Development District
Increments
Inc. I & II
Inc. III
Mitigation Areas
BASIN 1
BASIN 2
BASIN 3
West Lauderdale Water Control District A.K.A. Bonaventure Development District
N
0
2,600
5,200
10,400
Feet
Map Id: W-10-24.1
Print date: 03-24-2010
Calvin, Giordano & Associates, Inc.
EXCEPTIONAL SOLUTIONS
West Lauderdale Water Control District A.K.A. Bonaventure Development District
Inc. III Mitigation
Inc. III
Inc. II Mitigation
Inc. I & II
Basin 1
Basin 2
Basin 3
Glades Pky
Saddle Club Rd
Royal Palm Blvd
Indian Trace
Weston Rd
South Post Rd
SW 26th St
Bonaventure Blvd
Manatee Isles Dr
75
84
27

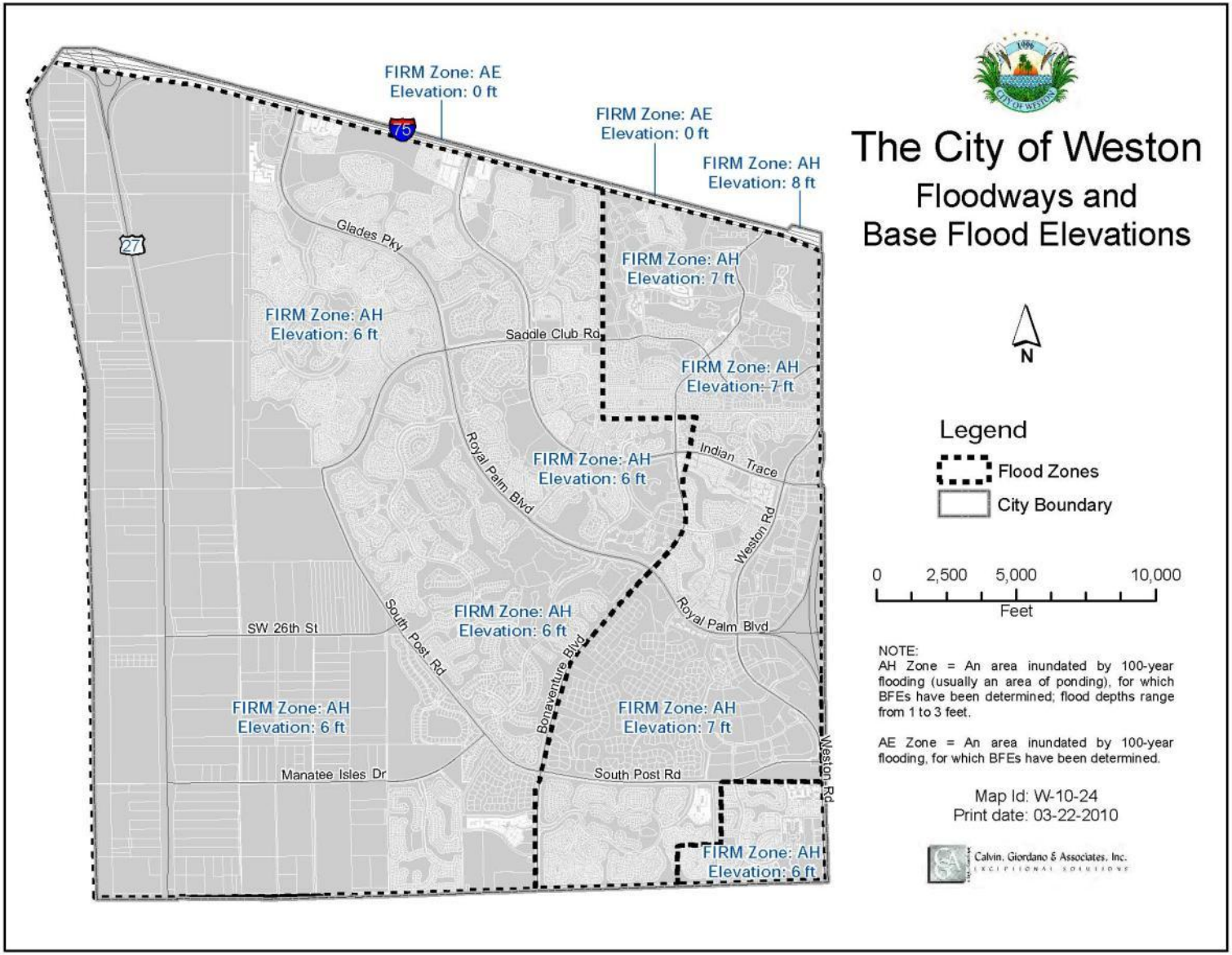
FIRM Zone: AE
Elevation: 0 ft
FIRM Zone: AE
Elevation: 0 ft
FIRM Zone: AH
Elevation: 8 ft
FIRM Zone: AH
Elevation: 7 ft
FIRM Zone: AH
Elevation: 6 ft
FIRM Zone: AH
Elevation: 7 ft
FIRM Zone: AH
Elevation: 6 ft
FIRM Zone: AH
Elevation: 6 ft
FIRM Zone: AH
Elevation: 6 ft
FIRM Zone: AH
Elevation: 7 ft
FIRM Zone: AH
Elevation: 6 ft
75
27
Glades Pky
Saddle Club Rd
Royal Palm Blvd
Indian Trace
Weston Rd
SW 26th St
South Post Rd
Bonaventure Blvd
Royal Palm Blvd
Manatee Isles Dr
South Post Rd
Weston Rd
The City of Weston
Floodways and
Base Flood Elevations
N
Legend
Flood Zones
City Boundary
0 2,500 5,000 10,000
Feet
NOTE:
AH Zone = An area inundated by 100-year flooding (usually an area of ponding), for which BFEs have been determined; flood depths range from 1 to 3 feet.
AE Zone = An area inundated by 100-year flooding, for which BFEs have been determined.
Map Id: W-10-24
Print date: 03-22-2010
Calvin, Giordano & Associates, Inc.
EXCEPTIONAL SOLUTIONS

WATER AND SEWER SPECIFICATIONS AND DETAILS

§127.50 WATER DISTRIBUTION SYSTEM

The following specifications are for ITDD, a dependent utility for the City. Refer to the City of Sunrise for water and Sewer specifications in BDD.

127.50 (A) ***General.***

127.50 (A)(1) The contractor shall notify the City and the Engineer of Record no later than 48 hours prior to making connections to existing systems. A City representative and the Engineer of Record shall be present.

127.50 (A)(2) No connections to the existing lines shall be permitted until pressure tests, for the water mains, and bacteriological tests have been performed and the system is acceptable to the City and the line has received bacteriological clearance by the BCHD.

127.50 (A)(3) Cleaning of newly installed piping systems shall be accomplished using flushing methods. Open flushing shall not be allowed without prior approval of the City. All water will be metered for testing purposes.

127.50 (A)(4) All water mains shall cross above Sewer and drainage lines with adequate cover and separation. If crossing above is not possible; it shall be indicated on the plans with required separation.

127.50 (A)(5) A 3 foot horizontal separation shall be maintained between water lines and all existing and proposed obstructions (i.e. catch basins, concrete poles, etc.).

127.50 (B) ***MATERIALS***

127.50 (B)(1) *Pipe:* The water main may be PVC or D.I.P. when less than 10 inches in diameter and shall be designed for a minimum working pressure of 150 PSI. Water mains 10 inches or larger shall be D.I.P.

127.50 (B)(1)(a) PVC pipe shall be ASTM 1120 pressure pipe with iron O.D., Class 150 (DR 18), conforming to ANSI/AWWA C900 (latest revision) or C905 (latest revision) and shall have push on rubber gasket joints.

127.50 (B)(1)(b) D.I.P. shall be Class 350 wall thickness (up to 12"), Class 300 (14"-18"), Class 250 (20" or greater) with interior cement lining conforming to ANSI/AWWA C151/A21.51-91, or latest revision. The pipe shall withstand a working pressure of 350 PSI. The joints shall be bell and spigot push on type or mechanical joint. Pipe shall conform with the physical and chemical requirements as set forth in the Handbook of Ductile Iron Pipe of the Cast Iron Pipe Research Association and shall be restrained appropriately.

127.50 (B)(2) *Fittings*: Fittings shall be ductile iron compact mechanical joint type providing restraint and shall be class 350 through 24" conforming to ANSI/AWWA C153/A21.53 (latest revision), and class 250 in sizes 24" and larger, conforming to

ANSI/AWWA C110/A21.10 (latest revision), complete with glands, gaskets, bolts and nuts. All fittings shall be cement lined and seal coated with the same as pipe.

127.50 (B)(3) *Water Valves:*

127.50 (B)(3)(a) Valves shall be gate valves (12" or less), or butterfly valves (greater than 12").

127.50 (B)(3)(a)(1) Gate valves shall be iron body, fully resilient seat, bronze mounted non-rising stem, double disc, rated at 200 PSI and conforming to ANSI/AWWA C509-94 (latest revision). Exposed valves shall be outside screw and yoke type. Gate valves shall be Mueller, Clow, American Darling, or approved equal.

127.50 (B)(3)(a)(2) Butterfly valves and operators shall conform to ANSI/AWWA C504 (latest revision) standard for rubber-seated butterfly valves. Valves shall be class 150 A or B and shall be Mueller, Pratt, Clow, DeZurik, or approved equal.

127.50 (B)(3)(b) Air Release Valves

127.50 (B)(3)(b)(1) Water Main Air Release Valves - Valve body and cover shall be of cast iron construction, ASTM A126-A. All internal parts shall be of stainless steel, ASTM A240 - Type 304 for the float and ASTM A296 - Type 316 for the linkage. The venting orifice shall be 3/16" in diameter with brass seat. The inlet opening shall be a 2" NPT screwed connection. The overall height shall not exceed 13 inches. Valves shall be manufactured by Valve and Primer Corporation, model number APCO 200A, or approved equal.

127.50 (B)(3)(b)(2) Main valves shall be located on an extension of the Right-Of-Way Line unless dimensioned otherwise.

127.50 (B)(3)(b)(3) Main valves shall be installed away from parking areas. If this is unavoidable, proper measures shall be taken to avoid the parking of vehicles over the valves. Hydrant valves shall be installed as close to the main as possible.

127.50 (B)(3)(b)(4) The distance from the top of the valve actuator nut to final grade shall be a minimum of 12 inches and a maximum of 18 inches.

127.50 (B)(3)(b)(5) One blue reflective pavement marker shall be provided in the center of the nearest lanes of road pavement adjacent to valve.

127.50 (B)(4) *Service Connections:*

127.50 (B)(4)(a) Service saddles shall be Ductile Iron epoxy or nylon coated with double STAINLESS steel straps or single wide strap. Saddles shall conform to ANSI/AWWA C111/21.11 and ASTM A 588 (latest revision).

127.50 (B)(4)(b) Service lines shall be polyethylene tubing as described in ANSI/AWWA C901, or latest revision with a working pressure of 200 PSI (DR 9). Pipe joints shall be of the compression type totally confined grip seal and coupling nut. Polyethylene shall be extruded from PE 3408 high molecular weight materials and shall conform to ASTM D2737.

127.50 (B)(4)(c) Corporation stops shall be manufactured of brass alloy in accordance with ASTM B62 with threaded ends and shall be Ford or approved equal.

127.50 (B)(4)(d) Meter stops shall be the 90 degree lockwing type and shall be of bronze construction in accordance with ASTM B62. Meter stops shall be closed button design and resilient "O" ring sealed against external leakage at the top. Stops shall be equipped with a meter coupling nut on the outlet sides, as manufactured by Mueller, Ford or approved equal.

127.50 (B)(4)(e) All meters (2 inches and smaller) and meter boxes will be supplied and installed by the City at the Owner's expense. Meters larger than 2 inches will have special installation requirements.

127.50 (B)(5) *Tapping Sleeves:* Tapping sleeves shall be ductile iron or stainless steel with mechanical joints and be Clow, or approved equal.

127.50 (B)(6) *Valve Boxes:*

127.50 (B)(6)(a) Valve boxes for water mains and Sewer force mains shall be U.S. Foundry Model 7500, marked "Water" or "Sewer", or approved equal.

127.50 (B)(6)(b) Valve boxes for blow-off assembly shall be U.S. Foundry Model 7630 (No. 3) or approved equal.

127.50 (B)(7) *Retainer Glands:* Retainer glands shall conform to ANSI/AWWA C111/A21.11 (latest revision). All glands shall be manufactured from ductile iron as listed by Underwriters Laboratories for 250 psi minimum water pressure rating. Clow Corporation, EBAA Iron, or approved equal.

127.50 (B)(8) *Double check valve backflow prevention assembly:* The assembly shall conform to ANSI/AWWA C510 (latest revision) and be capable of withstanding a working pressure of at least 150 PSI without damage to working parts or impairment of function. It shall consist of two internally loaded, independently operating check valves, located between two tightly closing resilient-seated shut off valves, with four properly placed resilient-seated test cocks.

127.50 (B)(9) Fire Hydrants:

127.50 (B)(9)(a) Fire hydrants shall have a minimum 5 1/4" valve opening and shall open against the pressure and closing with the flow. Hydrants shall be American, model number B-84-B or approved equal. Hydrants shall meet or exceed ANSI/AWWA C502

(latest revision), C503 (latest revision), and shall comply with Factory Mutual Research Corporation and Underwriters Laboratories UL246 Standard.

127.50 (B)(9)(b) Three blue reflective pavement markers shall be provided in the center of the nearest lanes of road pavement adjacent to all fire hydrant locations.

127.50 (B)(9)(c) Hydrants shall be painted "fire hydrant red with white fluorescent caps."
Refer to Land Development Regulations for Hydrant Spacing and other specifications

127.50 (C) ***Installation.***

127.50 (C)(1) *General:* Connection of all new systems to existing mains shall be done using one of the three following methods:

127.50 (C)(1)(a) Method A per BCHD Standards, which involves a reduced size temporary connection between the existing main and the new main.

127.50 (C)(1)(b) Method B per BCHD Standards, which involves a direct connection between the new and existing mains using two gate valves separated by a sleeve with a vent pipe.

127.50 (C)(1)(c) Method C approved by the BCHD, which includes one tapping valve and one additional gate valve requiring disinfection of the new system prior to conducting the pressure test.

127.50 (C)(2) *Bedding:* Bedding and initial backfill (12 inches above pipe) for all pipe shall be sand with no rock larger than 1" in diameter. Pearock or 3/4" washed rock will be used in water or where unsuitable bedding exists at the discretion of the City. All other fill shall not have rock larger than 6" in diameter.

127.50 (C)(3) *PVC Pipe:*

127.50 (C)(3)(a) PVC pipe, where approved by the City Engineer, shall be installed in accordance with the Uni-Bell Plastic Pipe Association's Guide for Installation of PVC Pressure Pipe for Municipal Water Distribution Systems.

127.50 (C)(3)(b) PVC pipe shall be installed with a minimum of 36" cover.

127.50 (C)(3)(c) Detector tape shall be installed the full length of all PVC mains approximately 18" below grade, color side up.

127.50 (C)(4) *Ductile Iron Pipe:*

127.50 (C)(4)(a) D.I.P. shall be installed in accordance with ANSI/AWWA C600 or latest revision.

127.50 (C)(4)(b) D.I.P. shall be installed with a minimum of 30" cover.

127.50 (C)(4)(c) Identification tape shall be installed the full length of all D.I.P. mains approximately 18" above the main, color side up.

127.50 (D) ***Water distribution system testing.***

127.50 (D)(1) The physical connection of the new system to the existing system shall be done in accordance with the requirements of the BCHD.

127.50 (D)(2) The complete water system shall be pressure tested and disinfected. The pressure test shall be in accordance with ANSI/AWWA C600 (latest revision).

127.50 (D)(3) The pressure test shall be witnessed by a representative of the City and the Engineer of Record.

127.50 (D)(4) Sampling points shall be provided at the locations shown on the plans as approved by the BCHD.

127.50 (D)(5) Before acceptance for operation, the water system shall be disinfected in accordance with ANSI/AWWA C651 (latest revision) with approved bacteriological samples and proper documentation by the BCHD. Collection of samples is the contractor's responsibility and will be witnessed by a City representative.

§127.51 GRAVITY SEWAGE COLLECTION SYSTEM

The following specifications are for ITDD, a dependent utility for the City. Refer to the City of Sunrise for water and Sewer specifications in BDD.

127.51 (A) ***Materials.***

127.51 (A)(1) *Sewer Pipe and Fittings:*

127.51 (A)(1)(a) PVC Sewer pipe and fittings shall be non-pressure polyvinyl chloride pipe conforming to ASTM D3034, SDR 26, or equal with push-on rubber gasket joints unless otherwise noted.

127.51 (A)(1)(b) D.I.P. shall be double cement lined, conforming to ANSI/AWWA C104/A21.4-90 or latest revision, minimum pressure Class 350 (unless otherwise specified).

127.51 (A)(1)(c) All fittings and accessories shall be as manufactured or supplied by the pipe manufacturer.

127.51 (A)(2) *Manholes:*

127.51 (A)(2)(a) Manholes shall be precast per ASTM C478 Type 2 with 4000 psi concrete and grade 60 steel. Monolithically poured bases only.

127.51 (A)(2)(b) Manhole openings are to be sealed with anti-hydro cement or approved equal. No molding plaster will be allowed.

127.51 (A)(2)(c) Manhole joints shall be sealed with "Ramnek" gaskets or approved equal and with anti-hydro cement on the inside and outside.

127.51 (B) ***Installation.***

127.51 (B)(1) *Pipe and Fittings:*

127.51 (B)(1)(a) Sewer pipe shall be installed in accordance with ASTM D2321.

127.51 (B)(1)(b) D.I.P. shall be installed in accordance with ANSI/AWWA C600 or latest revision.

127.51 (B)(1)(c) Bedding and initial backfill (12 inches) over Sewer mains and services shall be sand with no rock larger than 1" in diameter. Pearock or 3/4" washed rock will be used in water or where unsuitable bedding exists at the discretion of the City. All other fill shall not have rock larger than 6 inches in diameter.

127.51 (B)(1)(d) Pipe connection into manhole wall shall be ductile iron pipe grouted in-place or cast-in neoprene rubber boot, or equal as approved by the City.

127.51 (B)(1)(e) No Sewer shall be in the back yard of a residential lot without City approval.

127.51 (B)(1)(f) Gravity lines between manholes shall be eight inch minimum diameter.

127.51 (B)(2) *Manholes, Valve Vaults, Wet Wells:*

127.51 (B)(2)(a) Manholes shall be set plumb to line and grade on firm clean subgrade providing uniform bearing under the base.

127.51 (B)(2)(b) All openings and joints shall be sealed water-tight.
Manholes, Valve Vaults, Wet Wells, and Metal shall receive the following coatings:

127.51 (B)(3) Coatings

127.51 (B)(3)(a) System No. 1 Exterior of New Pre-Cast Concrete, Valve Vault, Wet Well Ring Sections

127.51 (B)(3)(a)(1) Surface Preparation: All curing oils, form oils, laitance, soluble salts and loose concrete shall be removed. Concrete shall be dry and thoroughly clean before coatings.

127.51 (B)(3)(a)(2) Prime Coat: None required.

127.51 (B)(3)(a)(3) Top Coat: Coal tar epoxy at eight MILS DFT per coat.

127.51 (B)(3)(a)(4) MDFT: 16 MILS DFT for two-coat system. Allow minimum of 24 hours drying time between coats.

127.51 (B)(3)(a)(5) Color: First Coat – Red
Second Coat – Black

127.51 (B)(3)(b) System No. 2 – Interior of New Concrete, Valve Pits

127.51 (B)(3)(b)(1) Surface Preparation: Concrete: All curing oils, form oils, laitance, soluble salts and loose concrete shall be removed. Concrete shall be dry and thoroughly clean before coatings. Concrete shall be cured 28 days, brush off blast.

127.51 (B)(3)(b)(2) Filler/Surfacer: Concrete substrate surface with cracks and/or voids greater than ½: in depth or width or areas where underlying aggregate has been exposed shall be patched with filler and surfacer. Material shall be applied in accordance with the manufacturer's application instructions.

127.51 (B)(3)(b)(3) Prime Coat: Vinyl Ester 12.0 to 18.0 mils DFT or polyamide epoxy, Tnemec Series 66 or 69 Hi-Build, 4 mils DFT

127.51 (B)(3)(b)(4) Top Coat: Vinyl Ester 12.0 to 18.0 mils DFT or polyamide epoxy, Tnemec Series 66 or 69 Hi-Build, 8 mils DFT.

127.51 (B)(3)(b)(5) MDFT: Minimum 30 MILS of DFT for two-coat vinyl ester system or 12 mils MDFT polyamide epoxy system. Time between coats and method of application shall be as per manufacturer's written instructions.

127.51 (B)(3)(b)(6) Color: First Coat – Beige (5002)
Second Coat – Gray (5001)

127.51 (B)(3)(c) System No. 3 – Submerged Metal – Domestic Sewage, Pump Station Wet Well Piping

127.51 (B)(3)(c)(1) Surface Preparation: Abrasive blast or centrifugal wheel blast, SSPC-SP5.

127.51 (B)(3)(c)(2) Prime Coat: Polyamide, anti-corrosive, epoxy primer, 1 coat, 2.5 MDFT.

127.51 (B)(3)(c)(3) Top Coat: Coat-tar epoxy, 2 coats, 16 MDFT.

127.51 (B)(3)(c)(4) MDFT: 18.5 mils MDFT for system.

127.51 (B)(3)(d) System No. 4 – Exposed Metal – Moderate Corrosive Conditions, Valve Pit Piping and Valves

127.51 (B)(3)(d)(1) Surface Preparation: Abrasive blast or centrifugal wheel blast, SSPC-SP10.

127.51 (B)(3)(d)(2) Prime Coat: Polyamide, anti-corrosive, epoxy primer, 1 coat, 2.5 MDFT.

127.51 (B)(3)(d)(3) Top Coat: Polyamide epoxy, Tnemic Series 66 or 69, 2 coats, 8 MDFT

127.51 (B)(3)(d)(4) MDFT: 10.5 mils DFT for three coats.

127.51 (B)(3)(e) System No. 5 – Existing Concrete Tank Lining – Domestic Sewage, Pump Station Wet Wells

127.51 (B)(3)(e)(1) Surface Preparation: Abrasive, Hydro/grit, blast, 4,000 PSI (see Section 03769).

127.51 (B)(3)(e)(2) Surface Restoration: Approved cement resurfacing treatment (see Section 03769).

127.51 (B)(3)(e)(3) Prime Coat: Epoxy primer in accordance with manufacturer's recommendations (see Section 03769) compatible with surface restoration treatment.

127.51 (B)(3)(e)(4) Top Coat: Epoxy compatible with surface restoration treatment (see Section 03769).

127.51 (B)(3)(e)(5) MDFT: 60 MDFT for system.

127.51 (B)(3)(f) System No. 6 – Existing Concrete Exposed

127.51 (B)(3)(f)(1) Surface Preparation: Abrasive blast, 4,000 PSI (see Section 03769).

127.51 (B)(3)(f)(2) Coating: 3 coats, Polyamide epoxy, Tnemec Series 66 or 69 Hi-Build Epoxoline.

127.51 (B)(3)(f)(3) MDFT: 12 MILS DFT for three-coat application.

127.51 (B)(4) *Service lines:*

127.51 (B)(4)(a) Minimum slope of all service lines shall be as indicated in the Florida Building Code.

127.51 (B)(4)(b) Service laterals shall terminate at a depth 30" below finished grade.

127.51 (B)(4)(c) Each Service Connection shall be capped water-tight.

127.51 (B)(4)(d) The end of each Service Connection shall be marked with a 2"x4" treated stake painted red, extending 18" (min.) above grade.

127.51 (B)(4)(e) Contractor shall rough in riser to 1 foot above finished grade and plug. At project completion, cut back to finished grade.

127.51 (B)(4)(f) Connection of services to building's Plumbing shall be coordinated with the City Building Department.

127.51 (B)(4)(g) Cover over service lines shall be 18" minimum, 24" maximum below finished grade and 24" under pavement.

127.51 (B)(4)(h) Polyethylene shall be bedded in backfill of sand with no rock greater than 1" in diameter.

127.51 (B)(4)(i) Meter stops shall have 8" to 10" cover or as required for proper meter/box installation.

127.51 (B)(4)(j) Water services under pavement shall be encased in a Schedule 80 PVC sleeve for the full length of the pavement and for 2' feet beyond the edge.

127.51 (B)(4)(k) The end of each Service Connection shall have a blue metallic locator and shall be marked with a 2"x4" treated stake, painted blue, extending 18" (minimum) above grade unless indicated otherwise.

127.51 (B)(4)(l) Connection to new Sewer main that has not been certified or accepted is prohibited (all testing and certification on mains shall be completed prior to plumber connection). Permission shall be granted from City for all new connections.

127.51 (B)(4)(m) Service laterals shall be installed along the lot line extension of each platted lot at the time of main installation, and shall be terminated at the property line or as close thereto as is practical for each residence or business location.

127.51 (B)(4)(n) Each service lateral shall include an approved 6 inch clean-out section at the property line and at 75' (maximum) intervals, and shall terminate with a capped wye fitting for future house connections.

127.51 (B)(4)(o) The minimum size for any service lateral shall be 6 inches and the minimum depth at the Right-Of-Way Line shall be 36 inches (30inches for ductile iron service laterals).

127.51 (B)(4)(p) Service laterals requiring cuts into the pavement after installation of the main and paving of the Roadway, shall require separate permits, permit fees and bonds and are to be avoided, if possible.

127.51 (B)(4)(q) Service laterals may not be stubbed into manholes except at terminal manholes and where approved by the City Engineer. The invert of the lateral at the manhole, where entry is permitted, shall meet a shaped, solid concrete invert that will conduct the effluent, without turbulence, to the invert at the manhole outlet.

127.51 (C) ***Testing.***

127.51 (C)(1) After construction of the Sewer System, the entire system shall be lamped. Sewer lamping shall be witnessed by the Engineer of Record and a representative from the City.

127.51 (C)(2) After construction of the Sewer System, the City or the Engineer of Record may require a visual infiltration and/or exfiltration test to be performed on the entire system or any part thereof.

127.51 (C)(3) An air test may be substituted for the water exfiltration test, upon approval of the City.

127.51 (C)(4) Manhole exfiltration leakage shall not exceed four gallons per day per unit.

127.51 (C)(5) Sewer pipe exfiltration leakage shall not exceed ten gallons per day per inch diameter per mile in a two hour test period for any section tested.

127.51 (C)(6) Visible manhole and Sewer pipe infiltration leakage shall not be permitted.

§127.52 SEWER TRANSMISSION SYSTEM SPECIFICATIONS

The following specifications are for ITDD, a dependent utility for the City. Refer to the City of Sunrise for water and Sewer specifications in BDD.

127.52 (A) ***General.***

127.52 (A)(1) The contractor shall notify the City and the Engineer of Record no later than 48 hours prior to making connections to existing systems. A City representative and the Engineer of Record shall be present.

127.52 (A)(2) No connections to the existing lines shall be made until pressure tests for the Sewer force mains, and the system is acceptable to the City and DERD.

127.52 (A)(3) Cleaning of newly installed piping systems shall be accomplished using flushing methods. Open flushing shall not be allowed without prior approval of the City. All water used for testing purposes shall be metered.

127.52 (A)(4) All force mains shall cross above drainage lines with adequate cover and separation. If this crossing is not possible, it shall be indicated on the plans.

127.52 (A)(5) A 3 foot lateral separation shall be maintained between water/Sewer lines and all existing and proposed obstructions (i.e. catch basins, concrete poles, etc.).

127.52 (B) ***Materials.***

127.52 (B)(1) The Sewage force main shall be D.I.P. PVC for pipe less than 10 inches in diameter may be allowed but only if approved by the City.

127.52 (B)(1)(a) PVC pipe shall be ASTM 1120 pressure pipe with iron O.D., Class 150 (DR 18), conforming to ANSI/AWWA C900-89 or C905-88 or latest revision and shall have push on rubber gasket joints.
127.52 (B)(1)(b) D.I.P. shall be Class 350 wall thickness (up to 12"), Class 300 (14"-18"), Class 250 (20" or greater) with interior cement lining conforming to ANSI/AWWA C151/A21.51 (latest revision). Sewage pipe shall be either double cement conforming to ANSI/AWWA C104/A21.4 (latest revision), or polyethylene lined conforming to ANSI/AWWA C105/A21.5-88 or latest revision, or approved equal. The pipe shall withstand a working pressure of 350 PSI. The joints shall be bell and spigot push on type, mechanical joint or flanged. Flanged pipe shall conform with the physical and chemical requirements as set forth in the Handbook of Ductile Iron Pipe of the Cast Iron Pipe Research Association.

127.52 (B)(2) *Fittings:* Fittings shall be ductile iron compact restrained mechanical joint type and shall be class 350 through 24" conforming to ANSI/AWWA C153/A21.53 (latest revision), and class 250 in sizes 24" and larger, conforming to ANSI/AWWA C110/A21.10 (latest revision), complete with glands, gaskets, bolts and nuts. All fittings shall be cement lined and seal coated with the same as pipe.

127.52 (B)(3) *Valves:* Valves shall be plug valves for Sewer force mains.

127.52 (B)(3)(a) Air Release Valves

127.52 (B)(3)(a)(1) Sewer Force Main Air Release Valves - System shall be a combination of one Sewage air release valve and one Sewage air/vacuum valve with dual isolation plug valves. Both valve bodies and covers shall be of cast iron construction, ASTM A126-B. All internal parts shall be of stainless steel, ASTM A240 - Type 304 and ASTM A276 - Type 303. The venting orifice shall be 5/16" in diameter with stainless steel seat. The inlet openings shall be a minimum of 2" NPT screwed connection for both valves. The valves shall be fully capable of operation in Sewage force main. Both valves shall include a back-flushing feature for periodic cleaning of the internal mechanism. The overall height shall not exceed 22 inches. Valves shall be manufactured by Val-Matic Corporation, or approved equal.

127.52 (B)(4) *Detector Tape:* Detector tape shall be 3" wide green tape for force main with a metallized foil core laminated between 2 layers of plastic film. The "CAUTION FORCE MAIN BURIED BELOW" shall be printed at 30" intervals along the tape. Tape shall be placed 18" below grade above all PVC mains and services or as recommended by manufacturer. Non-metallic tape shall be used above ductile iron pipe.

127.52 (B)(5) *Tapping Sleeves:* Tapping sleeves shall be Clow, or approved equal.

127.52 (B)(6) *Valve Boxes:*

127.52 (B)(6)(a) Valve boxes for water mains and Sewer force mains shall be U.S. Foundry Model 7500, marked "Water" or "Sewer", or approved equal.

127.52 (B)(6)(b) Valve boxes for blow-off assembly shall be U.S. Foundry Model 7630 (No. 3) or approved equal.

127.52 (B)(7) *Retainer Glands:* Retainer glands shall conform to ANSI/AWWA C111/A21.11 (latest revision). All glands shall be manufactured from ductile iron as listed by Underwriters Laboratories for 250 PSI minimum water pressure rating. Clow Corporation, EBAA Iron, or approved equal.

127.52 (B)(8) Megalugs Series 1100, or equal shall be used for restraint. Concrete Thrust Blocks are not allowed.

§127.53 WATER SUPPLY DETAILS

Detail No.	Description
W-1	Water Main Separation
W-2	Plug Valve and Box Detail
W-3	Gate Valve and Valve Box Detail
W-4	Valve Box Concrete Collar Detail
W-5	Water Service Connection Details
W-6	Typical Service Connection for 5/8″, 1″, 1-1/2″or 2′Meter
W-7	Meter Box Detail U.S. Foundry No. 7630
W-8	Meter Installation for 1-1/2″or 2″ Meter
W-9	Water Meter Locations
W-10	Looped Water Main System
W-11	Fire Hydrant Detail
W-12	Guard Post Detail
W-13	Fire Hydrant- Fire Dept. Connection Location
W-14	Standard Fire Dept. Connection Detail
W-15	Standard Fire Hydrant Placement Detail
W-16	Typ. Fire Hydrant/ Fire Dept. Connection Island Detail
W-17	Sampling Point Detail
W-18	Utility Crossing General Requirements
W-19	Typical Connection to Existing Main
W-20	Type 1 Private Fire Protection 4″, 6″@8″ Diameter Connection
W-21	Type 2 Private Fire Protection 4″, 6″@8″ Diameter Connection
W-22	Type 3 Private Fire Protection 2″ Diameter Connection
W-23	Backflow Preventer
W-24	Manual Blow Off
W-25	PVC Pipe Locating Wire and Identification Tape Detail

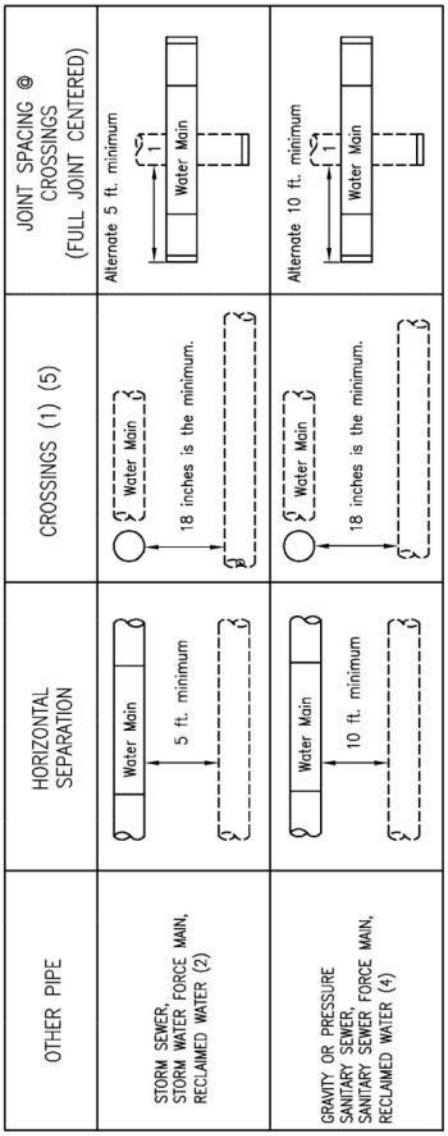

(1) WATER MAIN SHOULD CROSS ABOVE OTHER PIPE. WHEN WATER MAIN MUST BE BELOW OTHER PIPE, THE MINIMUM SEPARATION IS 18 INCHES.
(2) RECLAIMED WATER REGULATED UNDER PART III OF CHAPTER 62-610, F.A.C.
(3) 5 FT. FOR GRAVITY SANITARY SEWER WHERE THE BOTTOM OF THE WATER MAIN IS LAID AT LEAST 6 INCHES ABOVE THE TOP OF THE GRAVITY SANITARY SEWER.
(4) RECLAIMED WATER NOT REGULATED UNDER PART III OF CHAPTER 62-610, F.A.C.
(5) 18" MINIMUM SEPARATION REQUIRED BY WESTON, UNLESS OTHERWISE APPROVED.
(6) NOTE IF THE ABOVE CANNOT BE MET (USE PRESSURE TYPE PIPE) CONFIRM WITH THE CITY FOR APPROVAL.

STANDARD ENGINEERING DETAILS & SPECIFICATIONS

WATER MAIN SEPARATION

CITY OF WESTON, FLORIDA
PUBLIC WORKS AND UTILITIES
2599 SOUTH POST ROAD, WESTON, FL 33327
TELEPHONE: 954-385-2600 FAX: 954-385-2610

DATE	SCALE	DRAWING NO.
Feb. 2010	N.T.S.	W-1

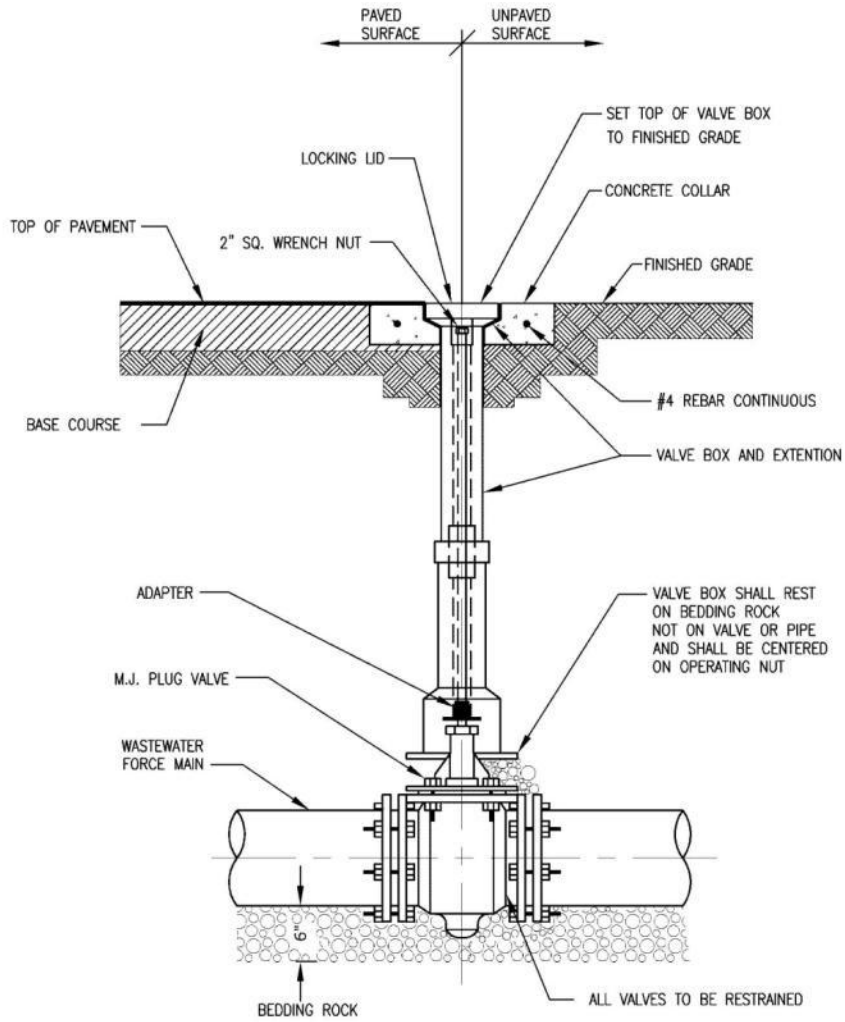

NOTE:

1. WHEN PLUG VALVE IS NOT LOCATED IN PAVEMENT, PLACE A GREEN PAVEMENT REFLECTOR MARKER IN THE DRIVE LANE, ADJACENT TO THE VALVE.
2. WRENCH NUT SHALL NOT BE MORE THAN 30" BELOW FINISHED GRADE.

	STANDARD ENGINEERING DETAILS & SPECIFICATIONS *PLUG VALVE AND BOX DETAIL*			
	CITY OF WESTON, FLORIDA PUBLIC WORKS AND UTILITIES 2599 SOUTH POST ROAD, WESTON, FL 33327 TELEPHONE: 954-385-2600 FAX: 954-385-2610	DATE Feb. 2010	SCALE N.T.S.	DRAWING NO. *W-2*

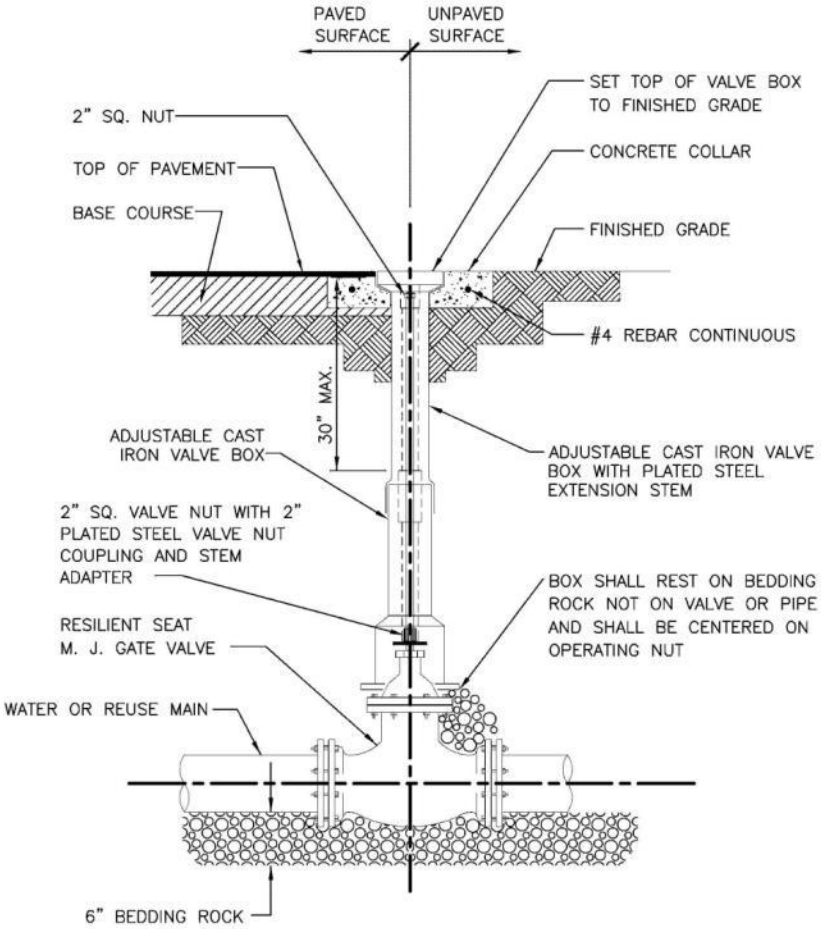

NOTES:

1. VALVE COLLAR SHALL BE 24"X24"X6" (MIN.) CONCRETE COLLAR PER FIG. W–4.
2. WHEN WATER VALVE IS NOT LOCATED IN PAVEMENT, PLACE A WHITE PAVEMENT REFLECTOR MARKER IN THE DRIVE LANE, ADJACENT TO THE VALVE.
3. VALVE BOX COVER SHALL BE PAINTED BLUE WITH THE DESIGNATION "WATER"; GREEN WITH THE DESIGNATION "SEWER"; PURPLE WITH THE DESIGNATION "REUSE".

	STANDARD ENGINEERING DETAILS & SPECIFICATIONS *GATE VALVE AND VALVE BOX DETAIL*			
	CITY OF WESTON, FLORIDA PUBLIC WORKS AND UTILITIES 2599 SOUTH POST ROAD, WESTON, FL 33327 TELEPHONE: 954–385–2600 FAX: 954–385–2610	DATE Feb. 2010	SCALE N.T.S.	DRAWING NO. *W-3*

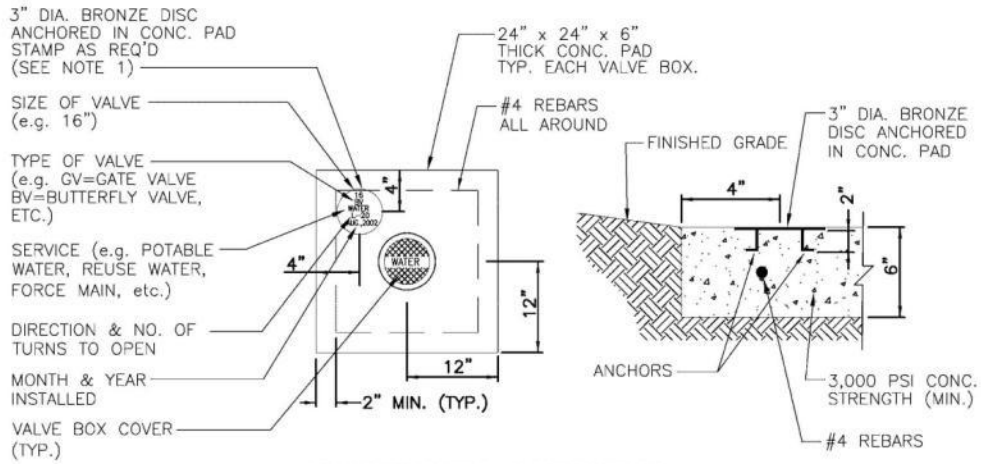

UNIMPROVED CONDITION

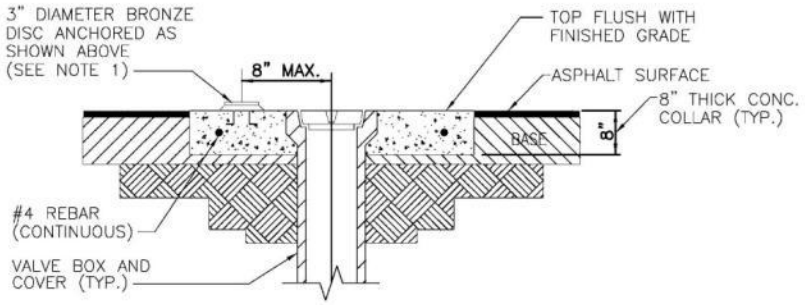

ALTERNATIVE FOR PAVED SURFACE

NOTES:

1. BRONZE IDENTIFICATION DISC SHALL BE REQUIRED FOR ALL VALVES, AND SHALL INDICATE: SIZE OF VALVE, TYPE OF VALVE, SERVICE, DIRECTION AND NUMBER OF TURNS TO OPEN, AND DATE INSTALLED.

	STANDARD ENGINEERING DETAILS & SPECIFICATIONS *VALVE BOX CONCRETE COLLAR DETAIL*			
	CITY OF WESTON, FLORIDA PUBLIC WORKS AND UTILITIES 2599 SOUTH POST ROAD, WESTON, FL 33327 TELEPHONE: 954-385-2600 FAX: 954-385-2610	DATE Feb. 2010	SCALE N.T.S.	DRAWING NO. *W-4*

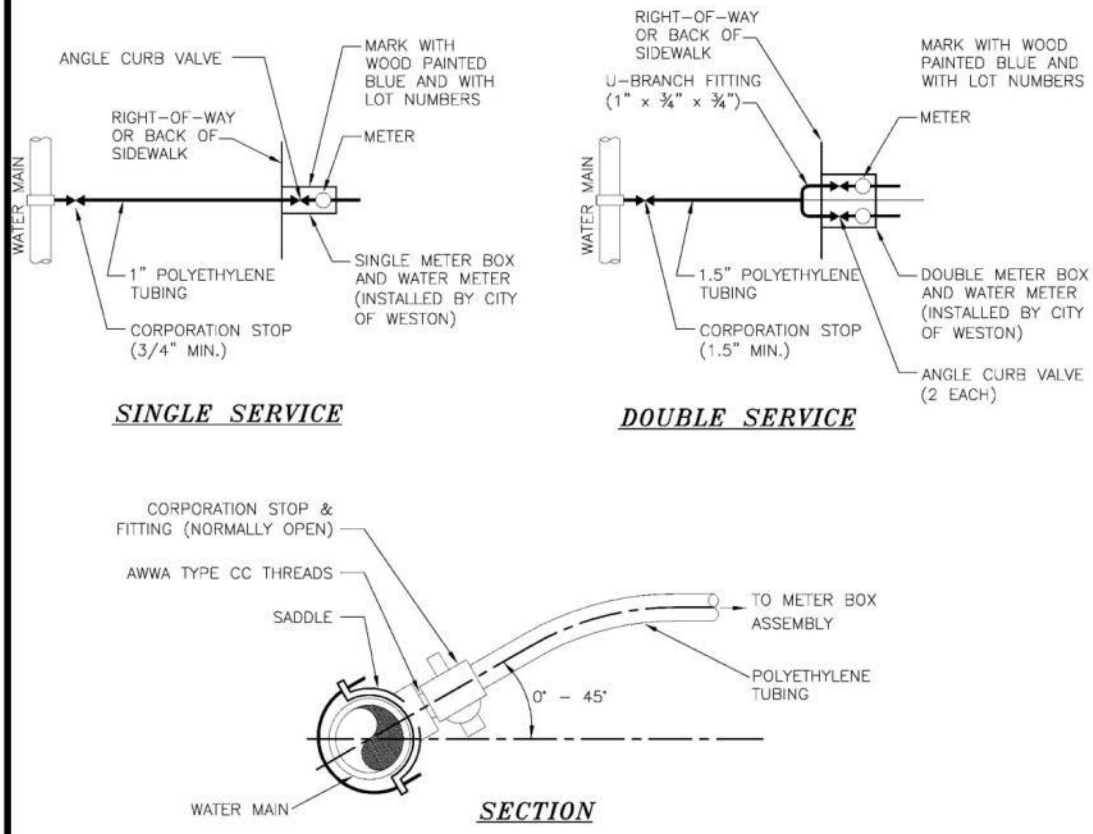

NOTES:

1. ALL FITTINGS SHALL BE BRASS WITH COMPRESSION/PACK JOINT TYPE CONNECTIONS.
2. NO SERVICE LINE SHALL TERMINATE UNDER A DRIVEWAY.
3. INSTALL MIN. 3" DIA. PVC SCH. 80 CASING FOR ALL LONG SERVICES UNDER EXISTING OR PROPOSED ROADWAY. END OF CASING TO EXTEND MINIMUM 3-FEET FROM EDGE OF PAVEMENT AND IS TO BE SEALED WITH PORTLAND CEMENT GROUT, OR APPROVED EQUAL.
4. METER BOX SHALL BE SUPPLIED BY THE CITY.

	STANDARD ENGINEERING DETAILS & SPECIFICATIONS WATER SERVICE CONNECTION DETAILS			
	CITY OF WESTON, FLORIDA PUBLIC WORKS AND UTILITIES 2599 SOUTH POST ROAD, WESTON, FL 33327 TELEPHONE: 954-385-2600 FAX: 954-385-2610	DATE Feb. 2010	SCALE N.T.S.	DRAWING NO. W-5

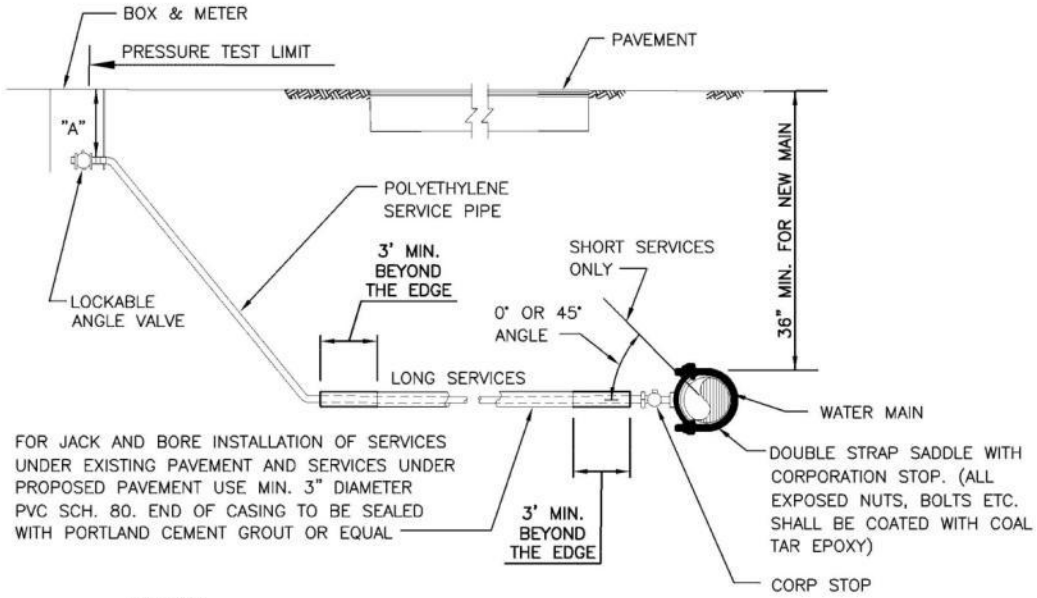

NOTES:

1. SUCCESSIVE TAPS INTO THE WATER MAIN SHALL BE SPACED A MINIMUM OF 18" APART.
2. METER BOX SHALL BE SET TO CONFORM TO FINISHED GRADE ADJACENT TO PROPERTY LINE. METER SHALL NOT BE PLACED IN SIDEWALK OR DRIVEWAY AREAS. SERVICE LINES SHALL NOT BE PLACED UNDER DRIVEWAYS.
3. ALL 5/8" & 1" METERS REQUIRE A LOCKABLE ANGLE CURB VALVE (ANGLE BALL VALVE: 3/4" VALVE FOR 5/8" METER, 1" VALVE FOR 1" METER AND 1 1/2" VALVE FOR 1 1/2" METER), YOKE AND INTEGRAL CHECK VALVE.
4. A DUAL CHECK VALVE OR OTHER BACKFLOW PREVENTION DEVICE REQUIRED ON ALL SERVICES BEHIND METER.
5. DIMENSION "A" = 7" (5/8" METER)
   = 8" (1" METER)
   = 8" (1 1/2" METER)
   = 12" (2" METER)
6. MAXIMUM SERVICE LENGTH IS 100' TO METER.
7. BEDDING (MIN. 4") AND COVER (MIN. 4") OVER SERVICE LINE OR CASING SHALL CONSIST OF FINE GRANULAR MATERIAL. UNSUITABLE IN-SITU MATERIALS SUCH AS MUCK, DEBRIS AND LARGER ROCKS SHALL BE REMOVED WITH 3/4" MAXIMUM SIZE.
8. USE MIN. 3" DIAMETER PVC SCH. 80 CASING FOR ALL LONG SERVICES UNDER EXISTING OR PROPOSED ROADWAY. END OF CASING TO EXTEND MIN. 3 FEET FROM EDGE OF PAVEMENT AND IS TO BE SEALED WITH CEMENT.

	STANDARD ENGINEERING DETAILS & SPECIFICATIONS *TYPICAL SERVICE CONNECTION FOR 5/8", 1", 1-1/2", OR 2" METER*			
	CITY OF WESTON, FLORIDA PUBLIC WORKS AND UTILITIES 2599 SOUTH POST ROAD, WESTON, FL 33327 TELEPHONE: 954-385-2600 FAX: 954-385-2610	DATE Feb. 2010	SCALE N.T.S.	DRAWING NO. *W-6*

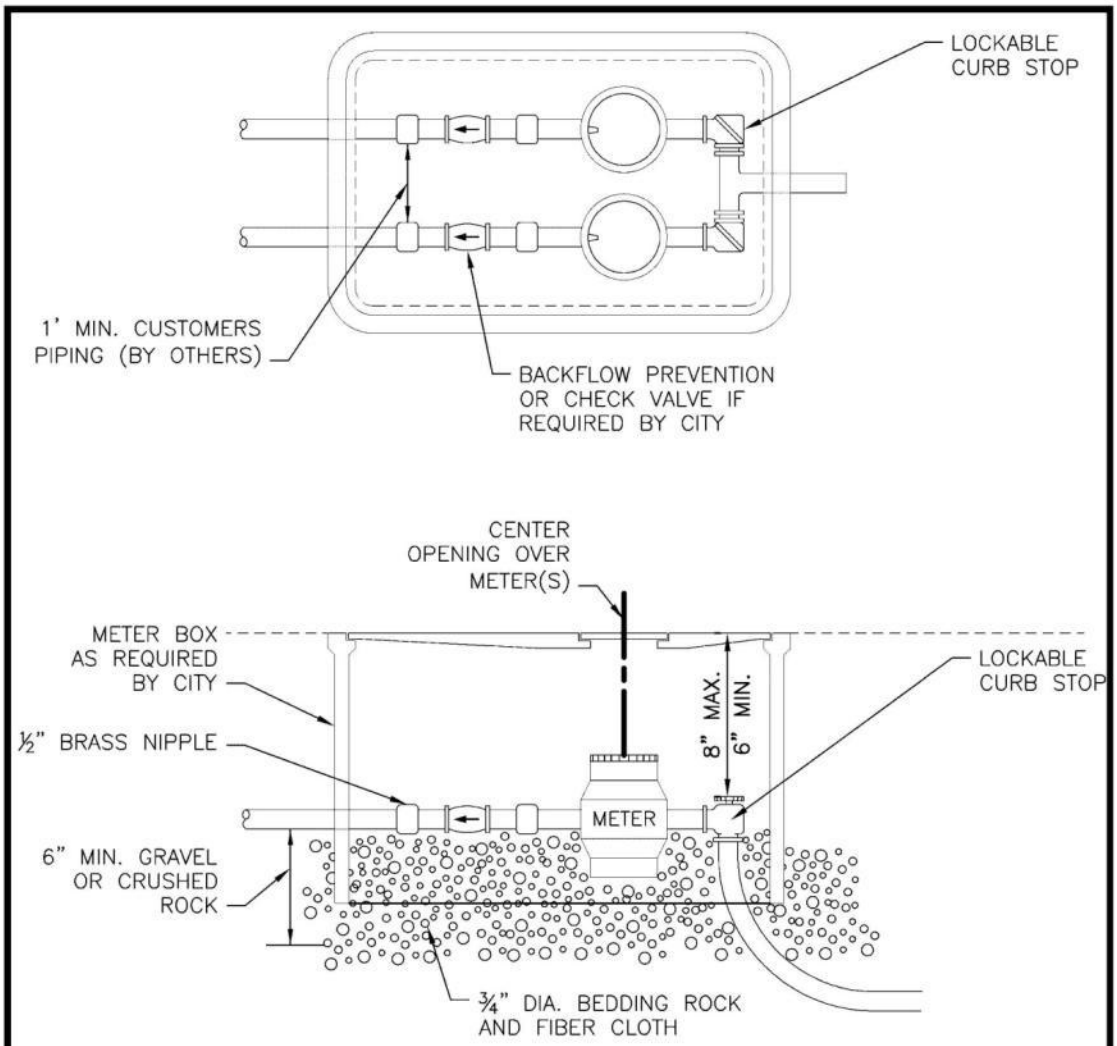

NOTES:

1. METER OVER 2" SHALL BE GIVEN SPECIAL DESIGN CONSIDERATION.
2. ALL METERS UP TO 2" WILL BE PURCHASED FROM AND INSTALLED BY THE CITY.
3. CURB STOP SHALL NOT BE INSTALLED BELOW 12" FROM FINISHED GRADE.
4. METER BOXES TO BE SET IN GRASS AREAS.
5. METER BOX SHALL BE PROVIDED BY THE CITY.

STANDARD ENGINEERING DETAILS & SPECIFICATIONS

METER BOX DETAIL U.S. FOUNDRY NO. 7630

CITY OF WESTON, FLORIDA PUBLIC WORKS AND UTILITIES 2599 SOUTH POST ROAD, WESTON, FL 33327 TELEPHONE: 954-385-2600 FAX: 954-385-2610	DATE	SCALE	DRAWING NO.
	Feb. 2010	N.T.S.	W-7

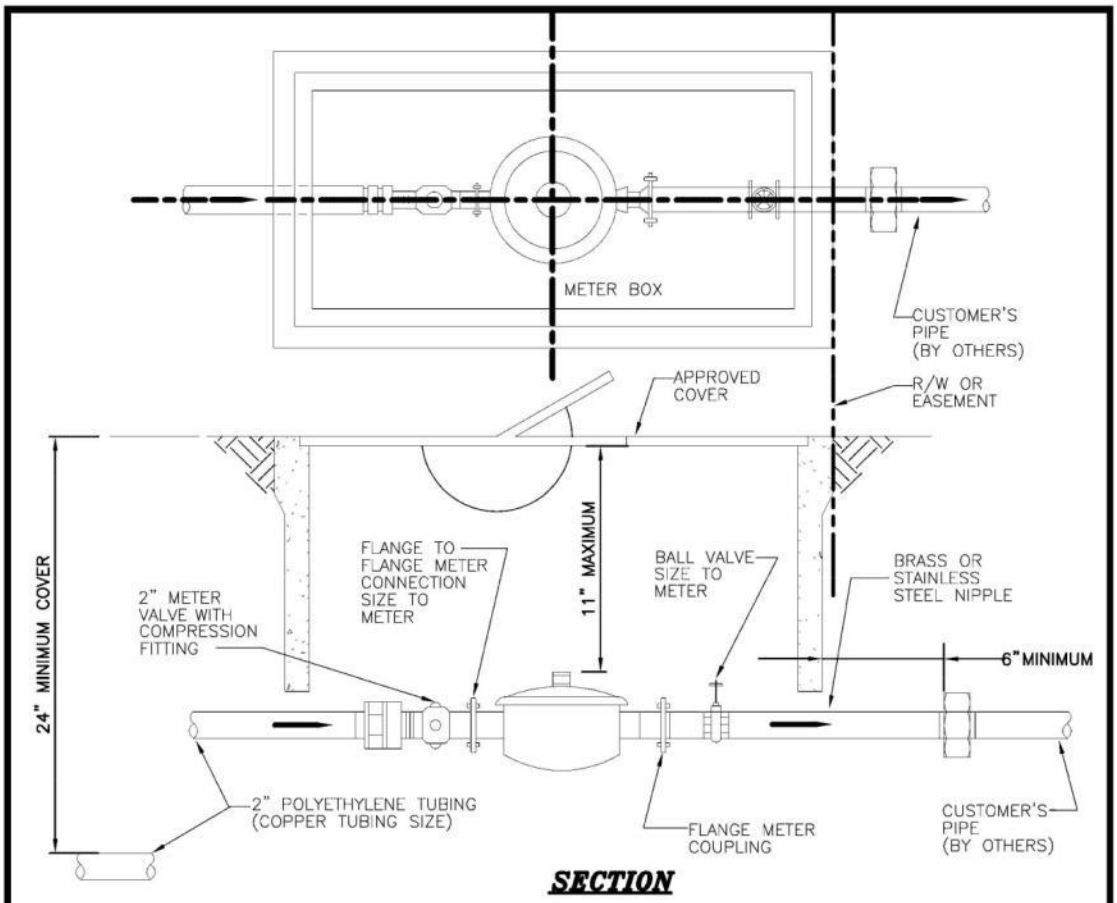

SECTION

NOTES:

1. ALL STRUCTURES IN R/W TO BE TRAFFIC BEARING TYPE.
2. R/W OR EASEMENT LINE IS THE CUSTOMERS SIDE OF METER BOX.
3. CITY OF WESTON RESPONSIBILITY ENDS AT THE CUSTOMERS SIDE OF BALL VALVE.
4. CURVE IN SERVICE LINE SHALL BE AS CLOSE TO METER BOX AS PRACTICAL AND MINIMUM RADIUS SHALL BE 21" FOR 2" TUBING.
5. ALL METERS WILL BE SUPPLIED AND INSTALLED BY CITY OF WESTON.
6. ALL BACKFLOW PREVENTION DEVICES PER LOCAL BUILDING CODE AND SUPPLIED BY CUSTOMER.
7. METER BOXES ARE TO BE DOWELED INTO SIDEWALK OR ROCK BASE USING A MINIMUM OF SIX 1/4" DIAMETER THREADED RODS EXTENDING 6" BEYOND THE METER BOX EXTERIOR.

STANDARD ENGINEERING DETAILS & SPECIFICATIONS

METER INSTALLATION FOR 1 1/2" OR 2" METERS

CITY OF WESTON, FLORIDA PUBLIC WORKS AND UTILITIES 2599 SOUTH POST ROAD, WESTON, FL 33327 TELEPHONE: 954-385-2600 FAX: 954-385-2610	DATE	SCALE	DRAWING NO.
	Feb. 2010	N.T.S.	W-8

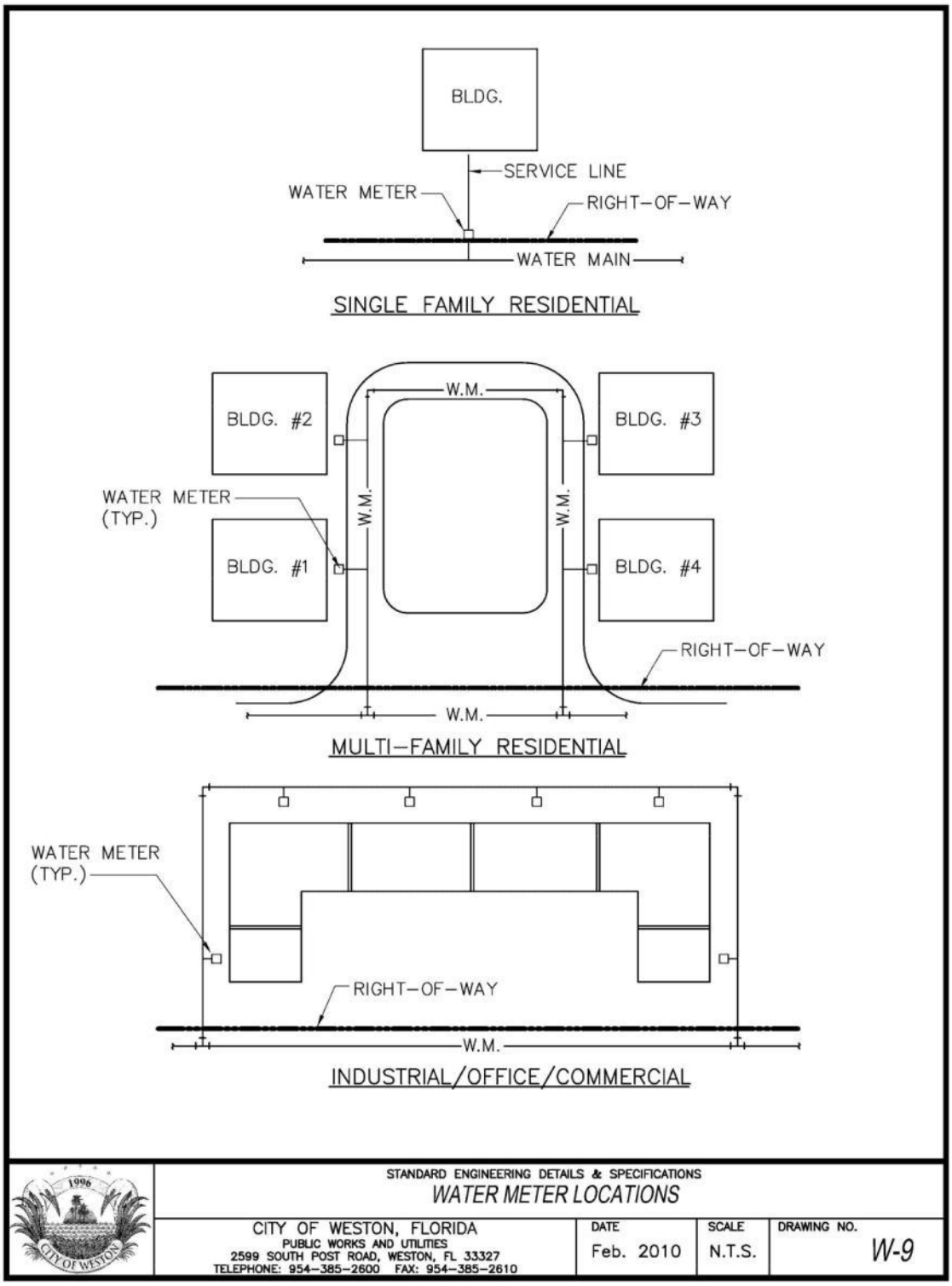
BLDG.
SERVICE LINE
WATER METER
RIGHT-OF-WAY
WATER MAIN
SINGLE FAMILY RESIDENTIAL
W.M.
BLDG. #2
BLDG. #3
WATER METER
(TYP.)
W.M.
W.M.
BLDG. #1
BLDG. #4
RIGHT-OF-WAY
W.M.
MULTI-FAMILY RESIDENTIAL
WATER METER
(TYP.)
RIGHT-OF-WAY
W.M.
INDUSTRIAL/OFFICE/COMMERCIAL
STANDARD ENGINEERING DETAILS & SPECIFICATIONS
WATER METER LOCATIONS
CITY OF WESTON, FLORIDA
PUBLIC WORKS AND UTILITIES
2599 SOUTH POST ROAD, WESTON, FL 33327
TELEPHONE: 954-385-2600 FAX: 954-385-2610
DATE
Feb. 2010
SCALE
N.T.S.
DRAWING NO.
W-9

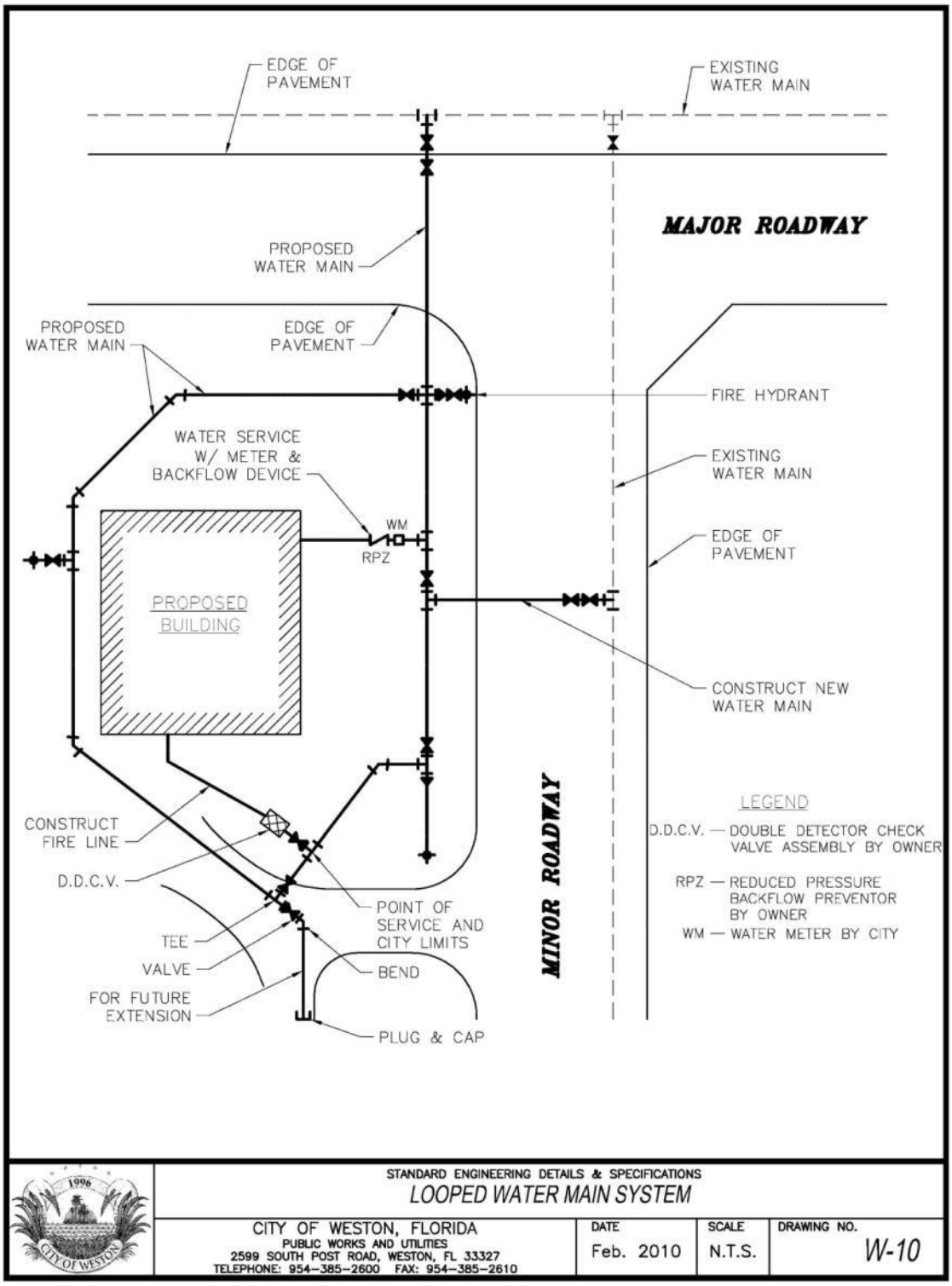
EDGE OF PAVEMENT
EXISTING WATER MAIN
MAJOR ROADWAY
PROPOSED WATER MAIN
PROPOSED WATER MAIN
EDGE OF PAVEMENT
FIRE HYDRANT
WATER SERVICE W/ METER & BACKFLOW DEVICE
EXISTING WATER MAIN
WM
RPZ
EDGE OF PAVEMENT
PROPOSED BUILDING
CONSTRUCT NEW WATER MAIN
MINOR ROADWAY
LEGEND
D.D.C.V. — DOUBLE DETECTOR CHECK VALVE ASSEMBLY BY OWNER
RPZ — REDUCED PRESSURE BACKFLOW PREVENTOR BY OWNER
WM — WATER METER BY CITY
CONSTRUCT FIRE LINE
D.D.C.V.
POINT OF SERVICE AND CITY LIMITS
TEE
VALVE
BEND
FOR FUTURE EXTENSION
PLUG & CAP
STANDARD ENGINEERING DETAILS & SPECIFICATIONS
LOOPED WATER MAIN SYSTEM
CITY OF WESTON, FLORIDA
PUBLIC WORKS AND UTILITIES
2599 SOUTH POST ROAD, WESTON, FL 33327
TELEPHONE: 954-385-2600 FAX: 954-385-2610
DATE
Feb. 2010
SCALE
N.T.S.
DRAWING NO.
W-10

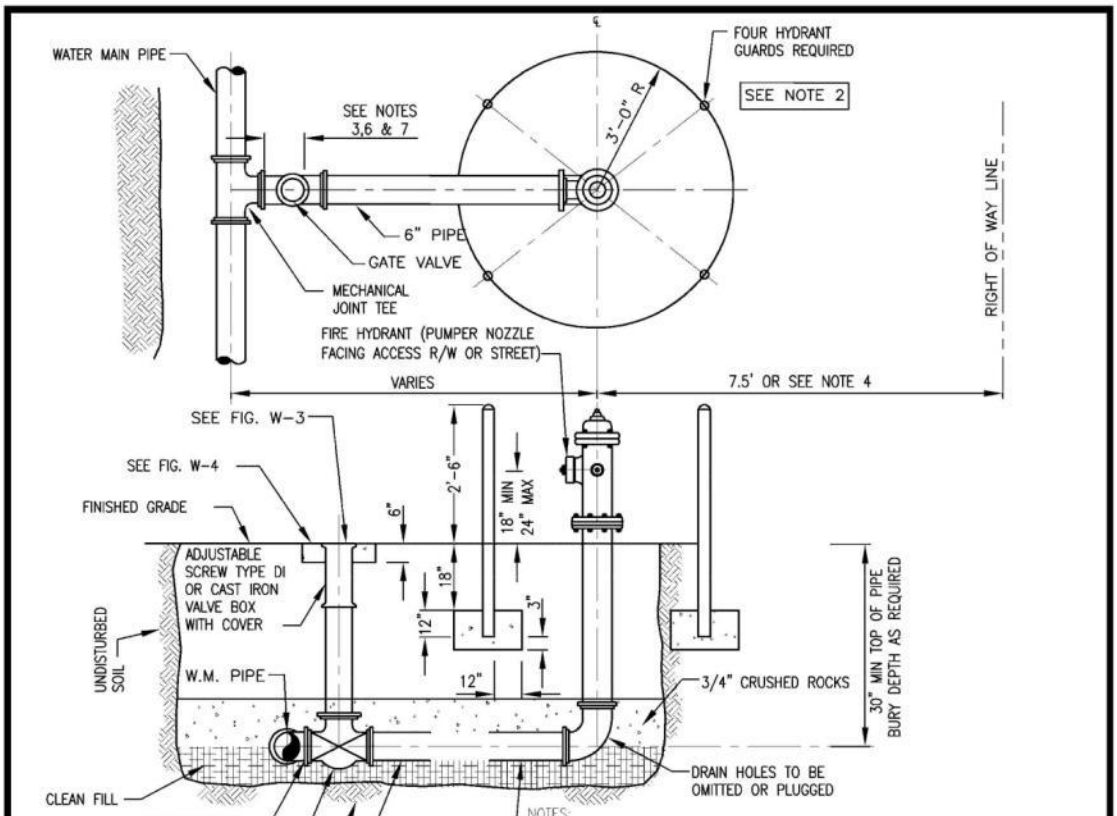

NOTES:

1. HYDRANT GUARDS TO BE 4" DIAMETER GALVANIZED STEEL PIPE FILLED WITH CONCRETE PAINTED YELLOW WITH GLASS BEADS.
2. A) OMIT REAR GUARDS IN LOCATIONS WHERE SIDEWALKS EXIST IN EASEMENTS OR PARKING LOTS.
   B) OMIT ALL GUARDS IN ROW.
3. USE RESTRAINED JOINTS FOR THE ENTIRE ASSEMBLY SHOWN.
4. HYDRANT SET BACK SHALL CONFORM TO FDOT AND BCHCED REQUIREMENTS, WHERE APPLICABLE.
5. DUCTILE IRON TO BE USED FOR FIRE HYDRANT ASSEMBLY.
6. GATE VALVE IS NORMALLY LOCATED NEXT TO TEE.
7. IF DISTANCE FROM MAIN LINE TO FIRE HYDRANT IS GREATER THAN 16 FEET ANOTHER GATE VALVE WILL BE PROVIDED CLOSE TO THE HYDRANT. THIS SECOND VALVE SHALL BE INSTALLED WITHIN 5' OF THE FIRE HYDRANT. CHECK VALVE SHALL BE WITHIN 3' OF FIRE HYDRANT.
8. ANCHORING TEES WILL BE UESD AT ALL FIRE HYDRANT VALVES. VALVES WILL NOT BE RODDED TO HYDRANT, MEGALUGS SHALL BE USED INSTEAD.
9. HYDRANT SHALL BE 3 WAY 5r" WITH 3'-6" BURY DEPTH. PUMPER NOZZLE TO FACE STREET.
10. A 7.5 FOOT CLEAR RADIUS SHALL BE MAINTAINED AROUND HYDRANT.
11. HYDRANT BURY LINE TO MATCH STREET CROWN ELEVATION.
12. FIRE HYDRANTS SHALL BE AMERICAN (B-84-B) OR APPROVED EQUAL. HYDRANTS OWNED BY CITY SHALL BE PAINTED "FIRE HYDRANT RED" WITH WHITE FLUORESCENT CAPS. PRIVATELY MAINTAINED HYDRANTS SHALL BE PAINTED YELLOW.
13. ENTIRE FIRE HYDRANT ASSEMBLY TO BE RESTRAINED W/SERIES 1100 "MEGALUG" OR APPROVED EQUAL.
14. THREE BLUE REFLECTIVE PAVEMENT MARKERS SHALL BE PROVIDED IN THE CENTER OF THE NEAREST ROADWAY LANE ADJACENT TO ALL FIRE HYDRANT LOCATIONS.

STANDARD ENGINEERING DETAILS & SPECIFICATIONS

FIRE HYDRANT INSTALLATION

CITY OF WESTON, FLORIDA PUBLIC WORKS AND UTILITIES 2599 SOUTH POST ROAD, WESTON, FL 33327 TELEPHONE: 954-385-2600 FAX: 954-385-2610	DATE	SCALE	DRAWING NO.
	Feb. 2010	N.T.S.	W-11

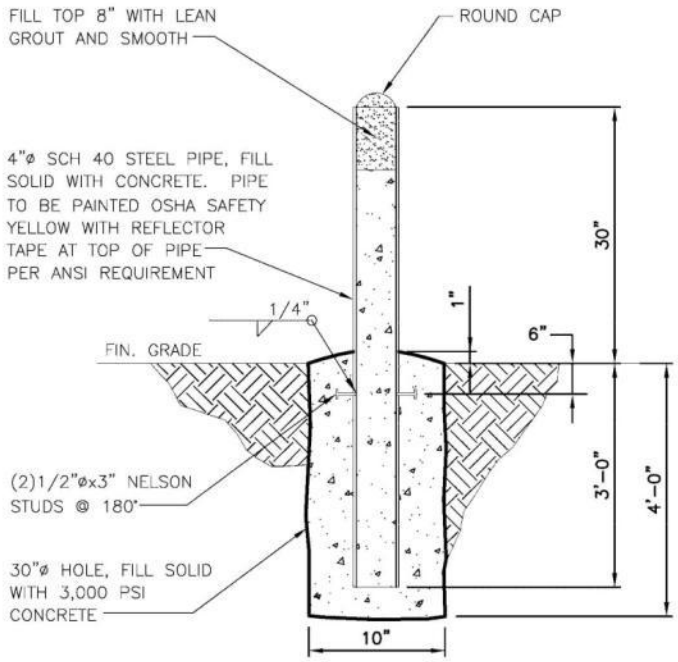

SECTION

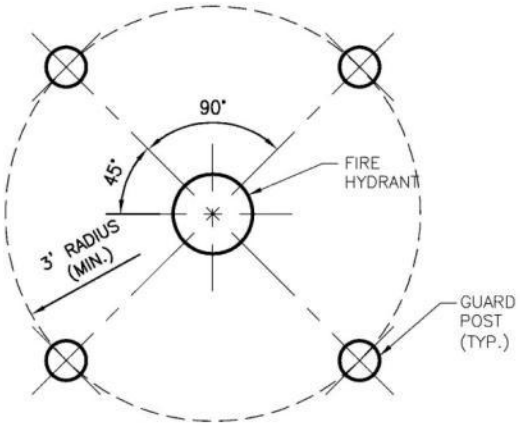

PLAN VIEW

STANDARD ENGINEERING DETAILS & SPECIFICATIONS

GUARD POST DETAIL

CITY OF WESTON, FLORIDA
PUBLIC WORKS AND UTILITIES
2599 SOUTH POST ROAD, WESTON, FL 33327
TELEPHONE: 954-385-2600 FAX: 954-385-2610

DATE	SCALE	DRAWING NO.
Feb. 2010	N.T.S.	W-12

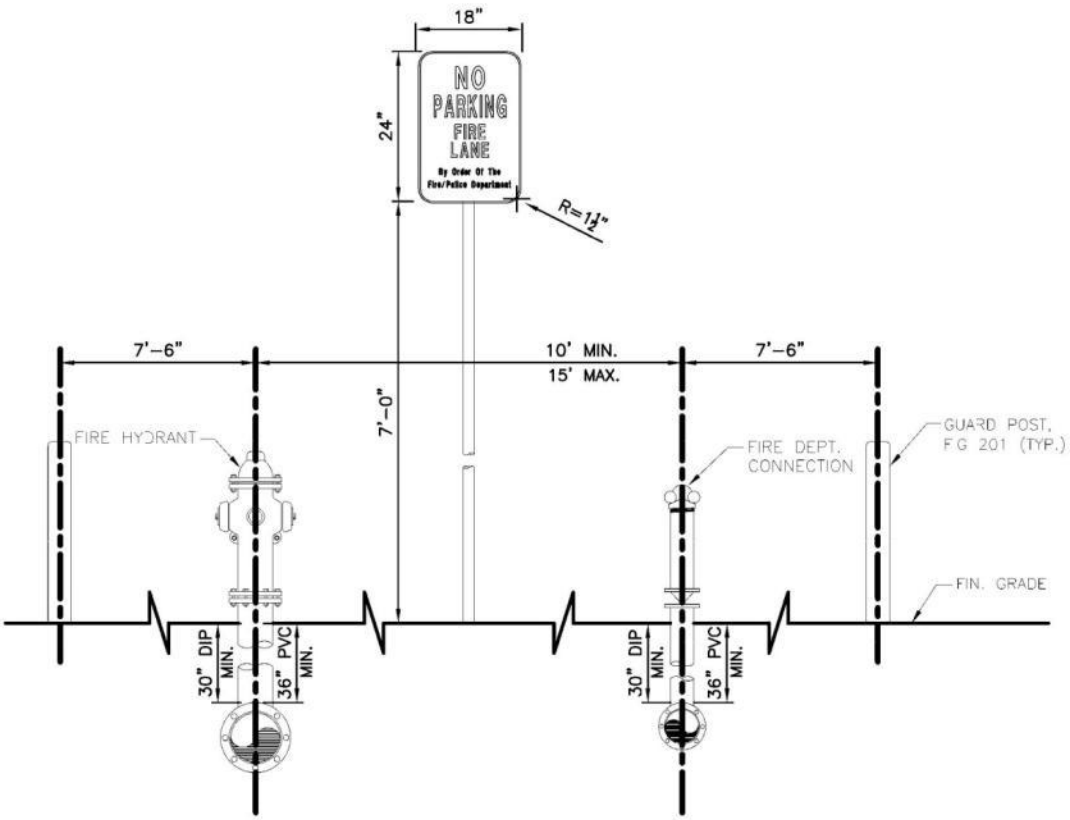

NOTE: FIRE HYDRANT AND FDC SHALL BE ON THE SAME PLANE

NOTES:

FIRE LANE SIGN:

1. SIGNS SHALL HAVE A WHITE REFLECTORIZED BACKGROUND WITH RED OPAQUE LEGEND AND BORDER.
2. "FIRE LANE" LETTERS SHALL BE 1¼" AND ALL OTHER LETTERS SHALL BE 1" SERIES "C".
3. SIGNS SHALL BE MOUNTED ON POST AT LOCATIONS DEPICTED ON SITE PLAN AT A MAXIMUM HEIGHT OF 7'-0" FROM THE FINISHED GRADE TO THE BOTTOM PART OF THE SIGN.

TOW-AWAY ZONE SIGN AND BUILDING ADDRESS SIGN:

1. SIGNS SHALL BE A MINIMUM OF 6"x12" WHITE BACKGROUND WITH RED LETTERS MINIMUM LETTER SIZE TO BE ONE INCH.

STANDARD ENGINEERING DETAILS & SPECIFICATIONS

FIRE HYDRANT-FIRE DEPT. CONNECTION LOCATION DETAIL

CITY OF WESTON, FLORIDA PUBLIC WORKS AND UTILITIES 2599 SOUTH POST ROAD, WESTON, FL 33327 TELEPHONE: 954-385-2600 FAX: 954-385-2610	DATE	SCALE	DRAWING NO.
	Feb. 2010	N.T.S.	W-13

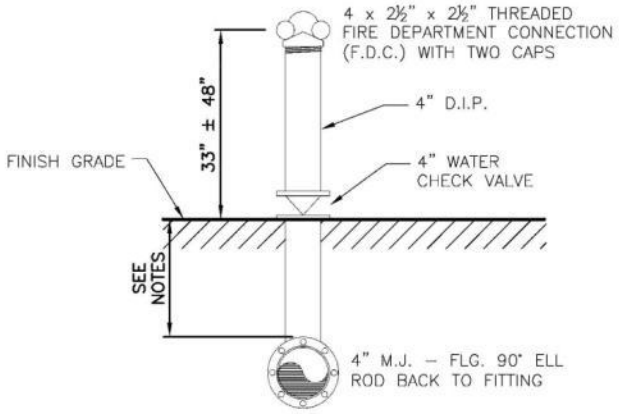

THERE SHALL BE NO SHUT OFF VALVE IN THE FIRE DEPARMENT CONNECTION.
NFPA 24 2-6.3

NOTES:

1. DEPTH OF COVER TO TOP OF PVC UNDERGROUND PIPING SHALL BE NOT LESS THAN 36" MINIMUM.
2. DEPTH OF COVER TO TOP OF DIP UNDERGROUND PIPING SHALL BE NOT LESS THAN 30" MINIMUM.

	STANDARD ENGINEERING DETAILS & SPECIFICATIONS *STANDARD FIRE DEPT. CONNECTION DETAIL*			
	CITY OF WESTON, FLORIDA PUBLIC WORKS AND UTILITIES 2599 SOUTH POST ROAD, WESTON, FL 33327 TELEPHONE: 954-385-2600 FAX: 954-385-2610	DATE Feb. 2010	SCALE N.T.S.	DRAWING NO. *W-14*

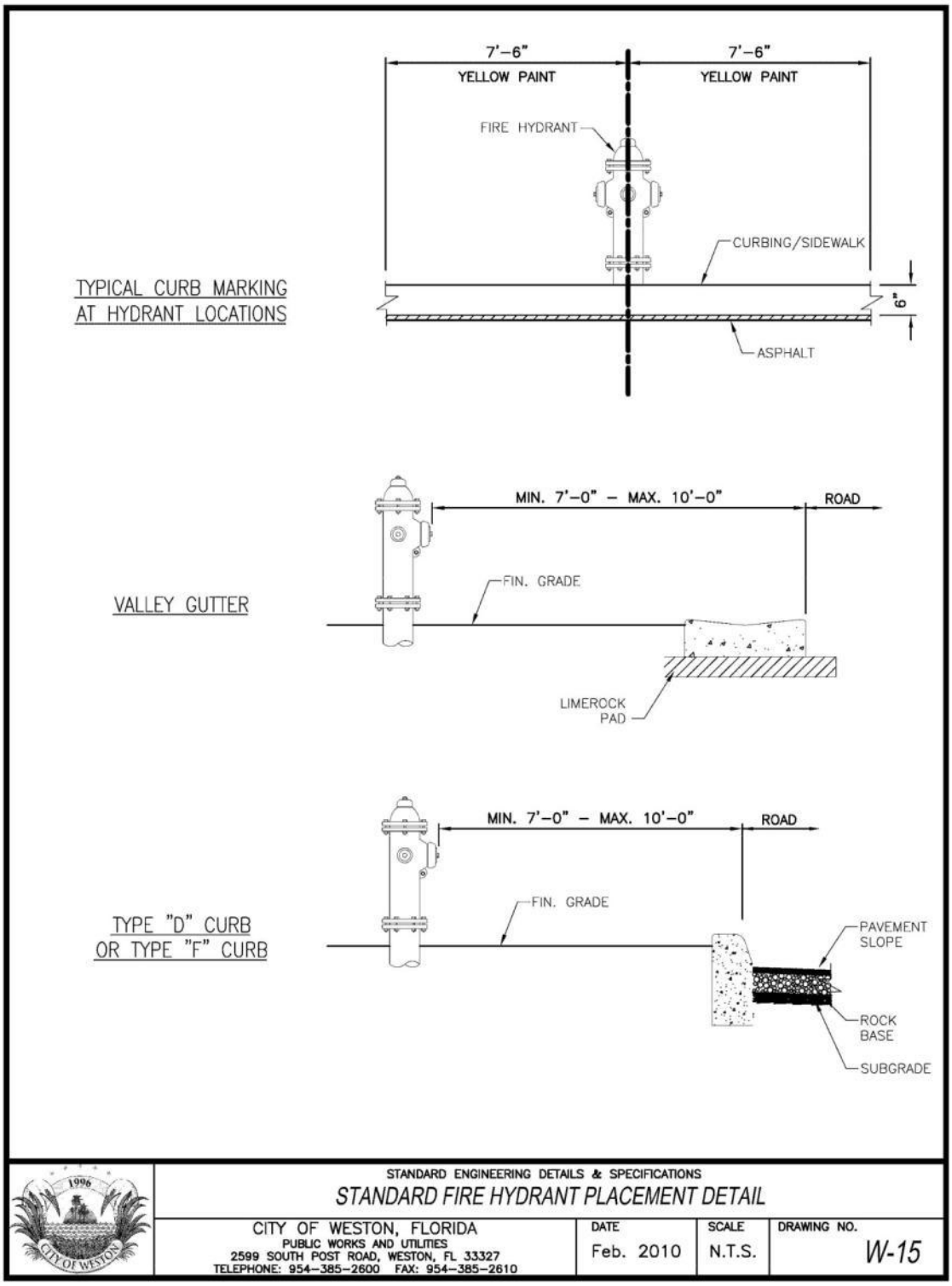
7'-6"
YELLOW PAINT
7'-6"
YELLOW PAINT
FIRE HYDRANT
CURBING/SIDEWALK
TYPICAL CURB MARKING
AT HYDRANT LOCATIONS
6"
ASPHALT
MIN. 7'-0" - MAX. 10'-0"
ROAD
FIN. GRADE
VALLEY GUTTER
LIMEROCK
PAD
MIN. 7'-0" - MAX. 10'-0"
ROAD
FIN. GRADE
TYPE "D" CURB
OR TYPE "F" CURB
PAVEMENT
SLOPE
ROCK
BASE
SUBGRADE
1996
CITY OF WESTON
STANDARD ENGINEERING DETAILS & SPECIFICATIONS
STANDARD FIRE HYDRANT PLACEMENT DETAIL
CITY OF WESTON, FLORIDA
PUBLIC WORKS AND UTILITIES
2599 SOUTH POST ROAD, WESTON, FL 33327
TELEPHONE: 954-385-2600 FAX: 954-385-2610
DATE
Feb. 2010
SCALE
N.T.S.
DRAWING NO.
W-15

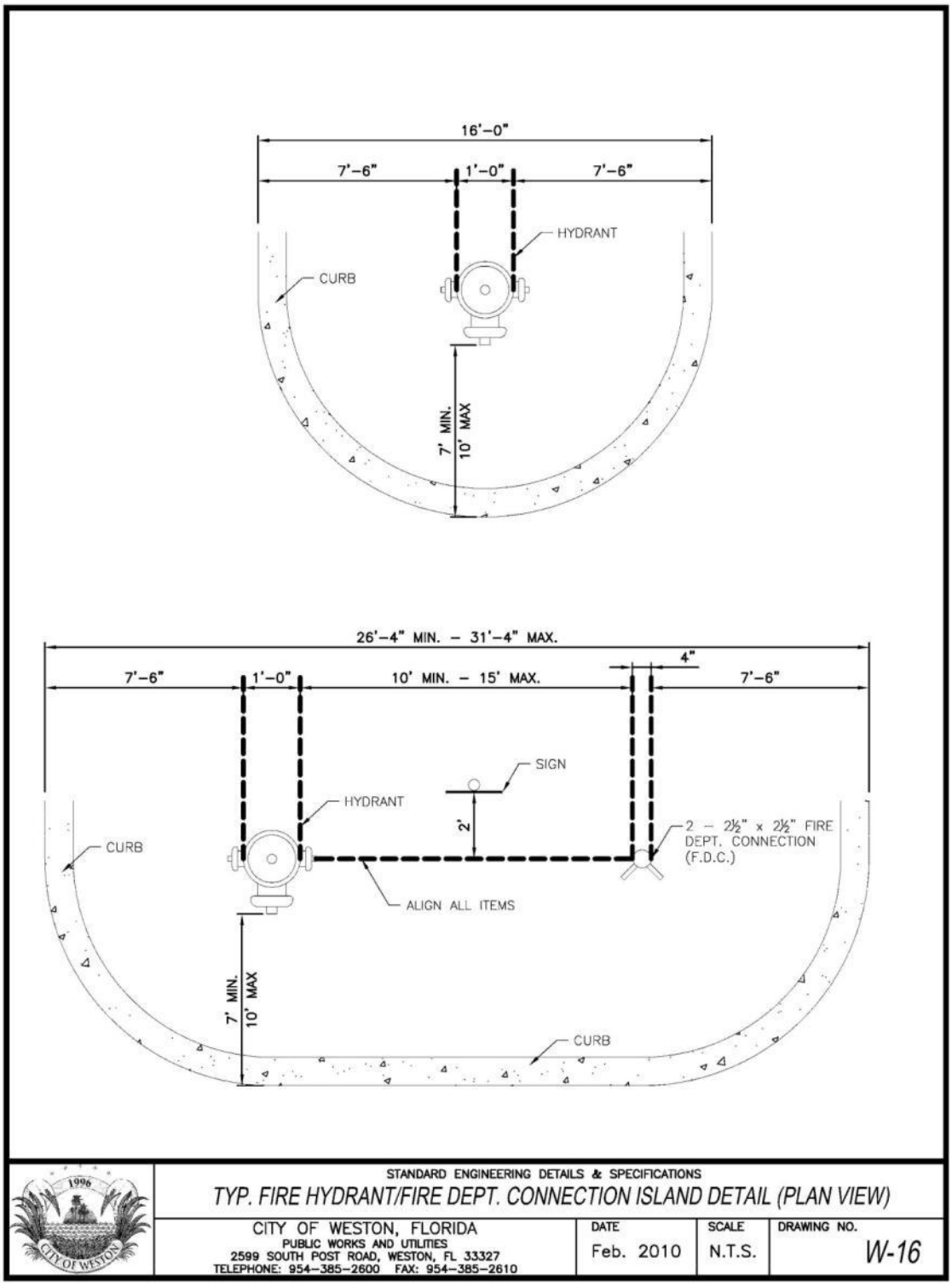
16'-0"
7'-6"
1'-0"
7'-6"
HYDRANT
CURB
7' MIN.
10' MAX
26'-4" MIN. - 31'-4" MAX.
4"
7'-6"
1'-0"
10' MIN. - 15' MAX.
7'-6"
SIGN
HYDRANT
2'
2 - 2½" x 2½" FIRE DEPT. CONNECTION (F.D.C.)
CURB
ALIGN ALL ITEMS
7' MIN.
10' MAX
CURB
STANDARD ENGINEERING DETAILS & SPECIFICATIONS
TYP. FIRE HYDRANT/FIRE DEPT. CONNECTION ISLAND DETAIL (PLAN VIEW)
CITY OF WESTON, FLORIDA
PUBLIC WORKS AND UTILITIES
2599 SOUTH POST ROAD, WESTON, FL 33327
TELEPHONE: 954-385-2600 FAX: 954-385-2610
DATE
Feb. 2010
SCALE
N.T.S.
DRAWING NO.
W-16

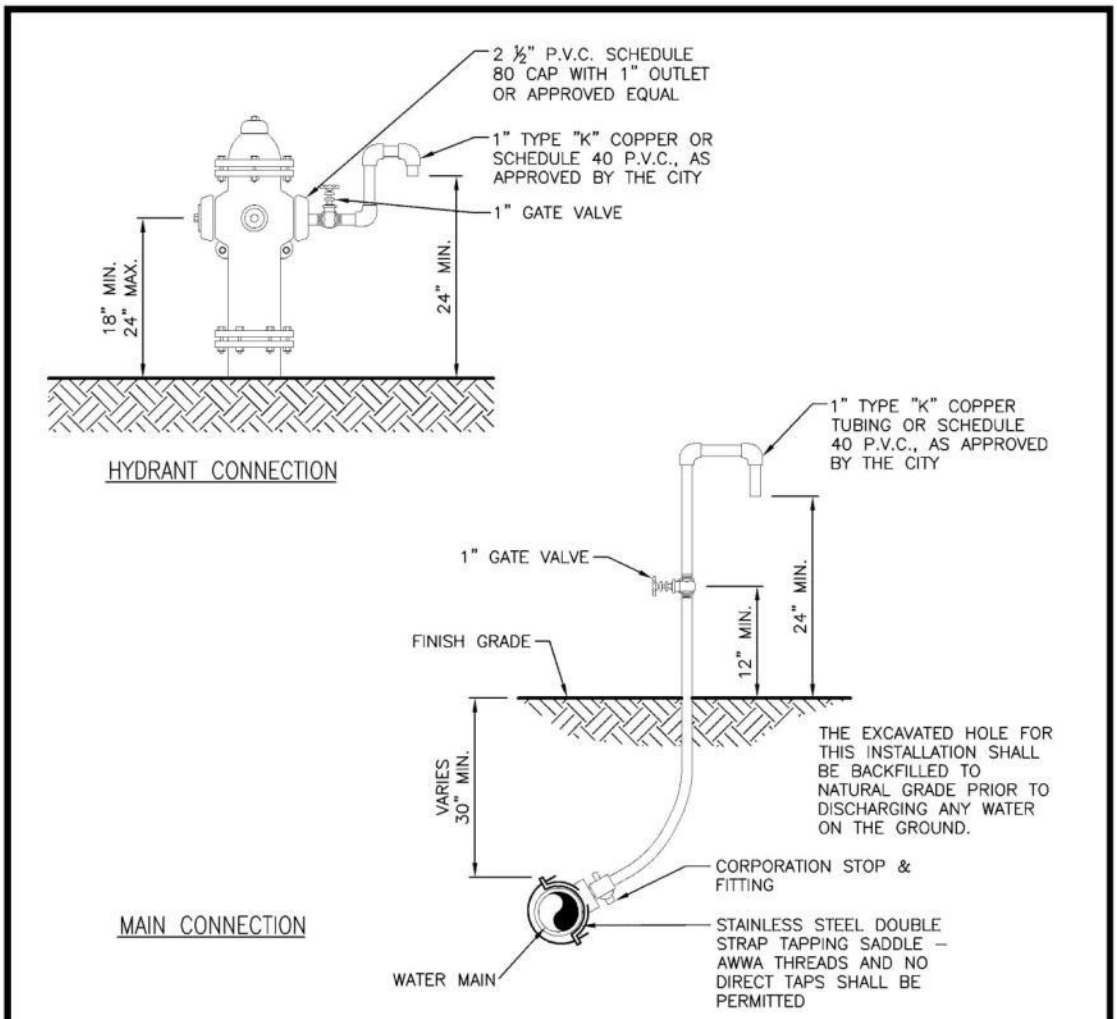

NOTES:

1. SAMPLING POINTS SHALL BE LOCATED AND LATER REMOVED AS REQUIRED BY CITY OF WESTON.
2. CORPORATION STOP SHALL BE REMOVED AND SADDLE PLUGGED WITH A BRASS FITTING.
3. SAMPLING POINTS MAY BE PLACED AT THE ENDS OF WATER SERVICES BEFORE THE METERS AND ON BLOW OFFS FOR TERMINAL WATER MAINS, WHERE SERVICES AND BLOW OFFS ARE REQUIRED BY THE PLANS.
4. WHERE COPPER TUBING IS USED A CORPORATION STOP SHALL BE INSTALLED WITH A LENGTH OF COPPER TUBING EXTENDING ABOVE THE GROUND. THE TUBING SHALL BE INSTALLED WITH A 180° BEND AND A 1" GATE VALVE.
5. UPON COMPLETION OF SAMPLING, REMOVE PIPING AND INSTALL SCREW–IN BRASS PLUG AT CORPORATION STOP.

	STANDARD ENGINEERING DETAILS & SPECIFICATIONS *SAMPLING POINT DETAIL*			
	CITY OF WESTON, FLORIDA PUBLIC WORKS AND UTILITIES 2599 SOUTH POST ROAD, WESTON, FL 33327 TELEPHONE: 954–385–2600 FAX: 954–385–2610	DATE Feb. 2010	SCALE N.T.S.	DRAWING NO. *W-17*

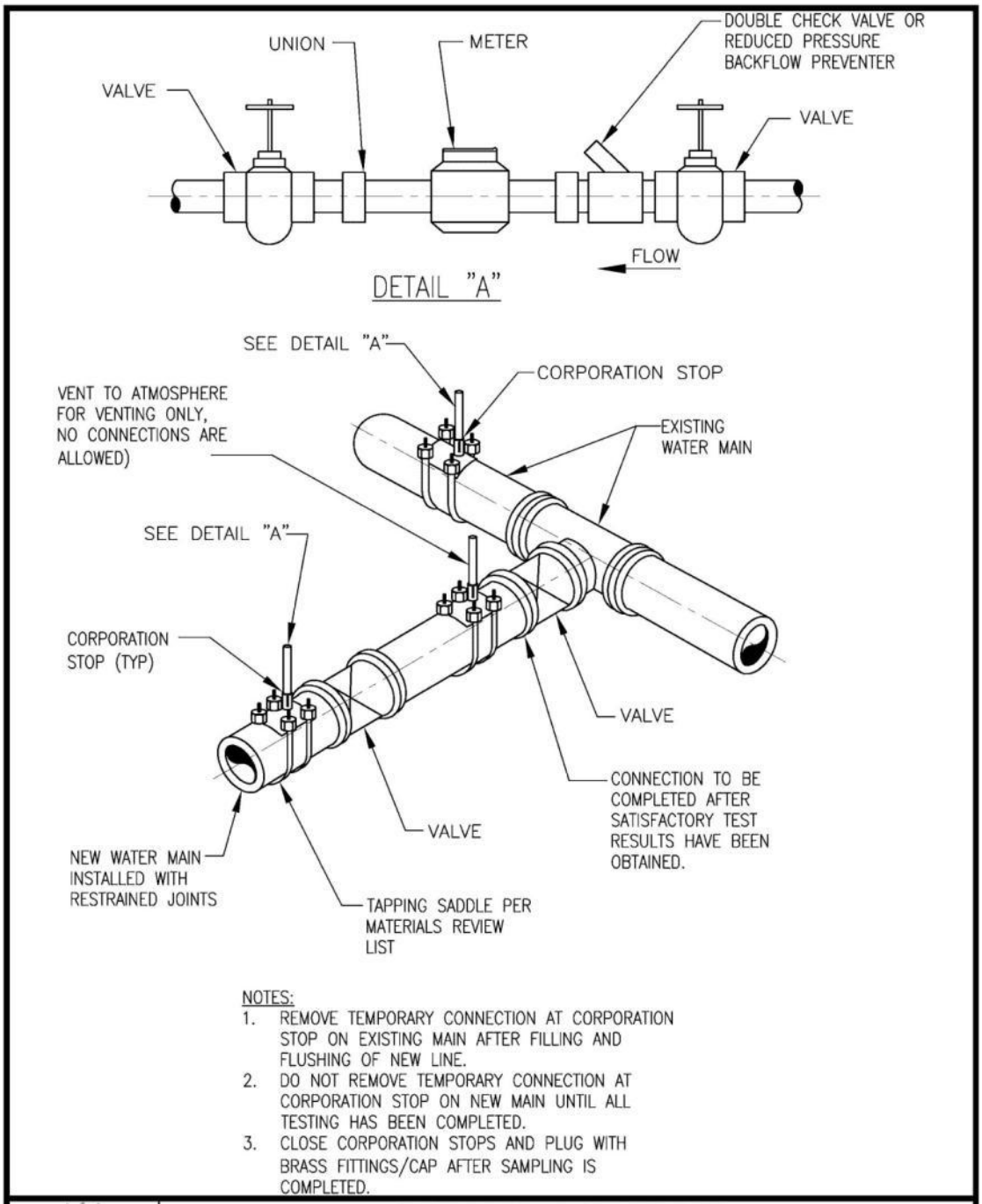

NOTES:

1. REMOVE TEMPORARY CONNECTION AT CORPORATION STOP ON EXISTING MAIN AFTER FILLING AND FLUSHING OF NEW LINE.
2. DO NOT REMOVE TEMPORARY CONNECTION AT CORPORATION STOP ON NEW MAIN UNTIL ALL TESTING HAS BEEN COMPLETED.
3. CLOSE CORPORATION STOPS AND PLUG WITH BRASS FITTINGS/CAP AFTER SAMPLING IS COMPLETED.

STANDARD ENGINEERING DETAILS & SPECIFICATIONS

FILLING AND FLUSHING CONNECTION

CITY OF WESTON, FLORIDA PUBLIC WORKS AND UTILITIES 2599 SOUTH POST ROAD, WESTON, FL 33327 TELEPHONE: 954-385-2600 FAX: 954-385-2610	DATE	SCALE	DRAWING NO.
	Feb. 2010	N.T.S.	W-18

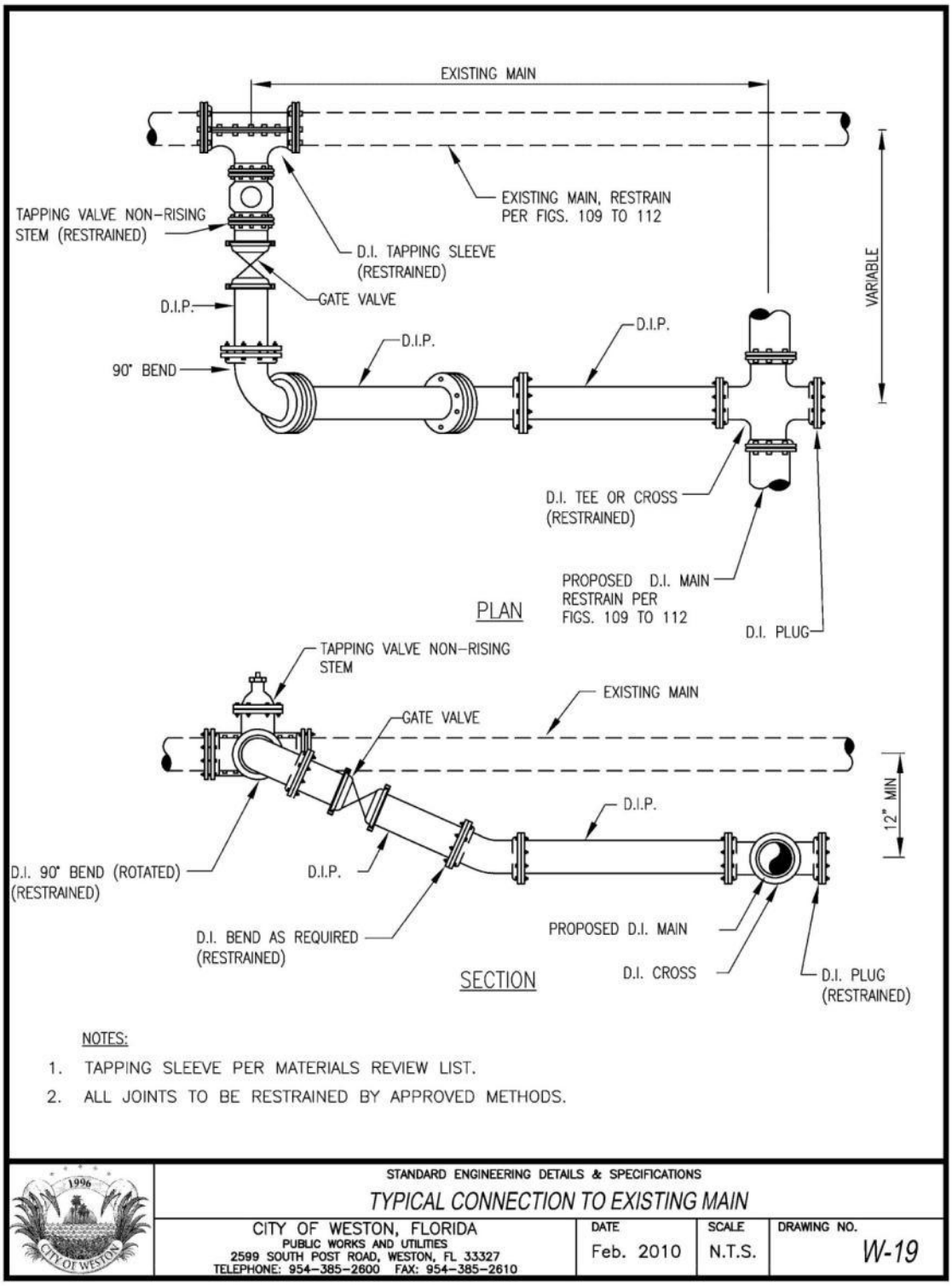
EXISTING MAIN
EXISTING MAIN, RESTRAIN PER FIGS. 109 TO 112
TAPPING VALVE NON-RISING STEM (RESTRAINED)
D.I. TAPPING SLEEVE (RESTRAINED)
GATE VALVE
D.I.P.
90° BEND
D.I.P.
D.I.P.
VARIABLE
D.I. TEE OR CROSS (RESTRAINED)
PROPOSED D.I. MAIN RESTRAIN PER FIGS. 109 TO 112
D.I. PLUG
PLAN
TAPPING VALVE NON-RISING STEM
EXISTING MAIN
GATE VALVE
D.I.P.
12" MIN
D.I. 90° BEND (ROTATED) (RESTRAINED)
D.I.P.
D.I. BEND AS REQUIRED (RESTRAINED)
PROPOSED D.I. MAIN
D.I. CROSS
D.I. PLUG (RESTRAINED)
SECTION
NOTES:
1. TAPPING SLEEVE PER MATERIALS REVIEW LIST.
2. ALL JOINTS TO BE RESTRAINED BY APPROVED METHODS.
STANDARD ENGINEERING DETAILS & SPECIFICATIONS
TYPICAL CONNECTION TO EXISTING MAIN
CITY OF WESTON, FLORIDA
PUBLIC WORKS AND UTILITIES
2599 SOUTH POST ROAD, WESTON, FL 33327
TELEPHONE: 954-385-2600 FAX: 954-385-2610
DATE
Feb. 2010
SCALE
N.T.S.
DRAWING NO.
W-19

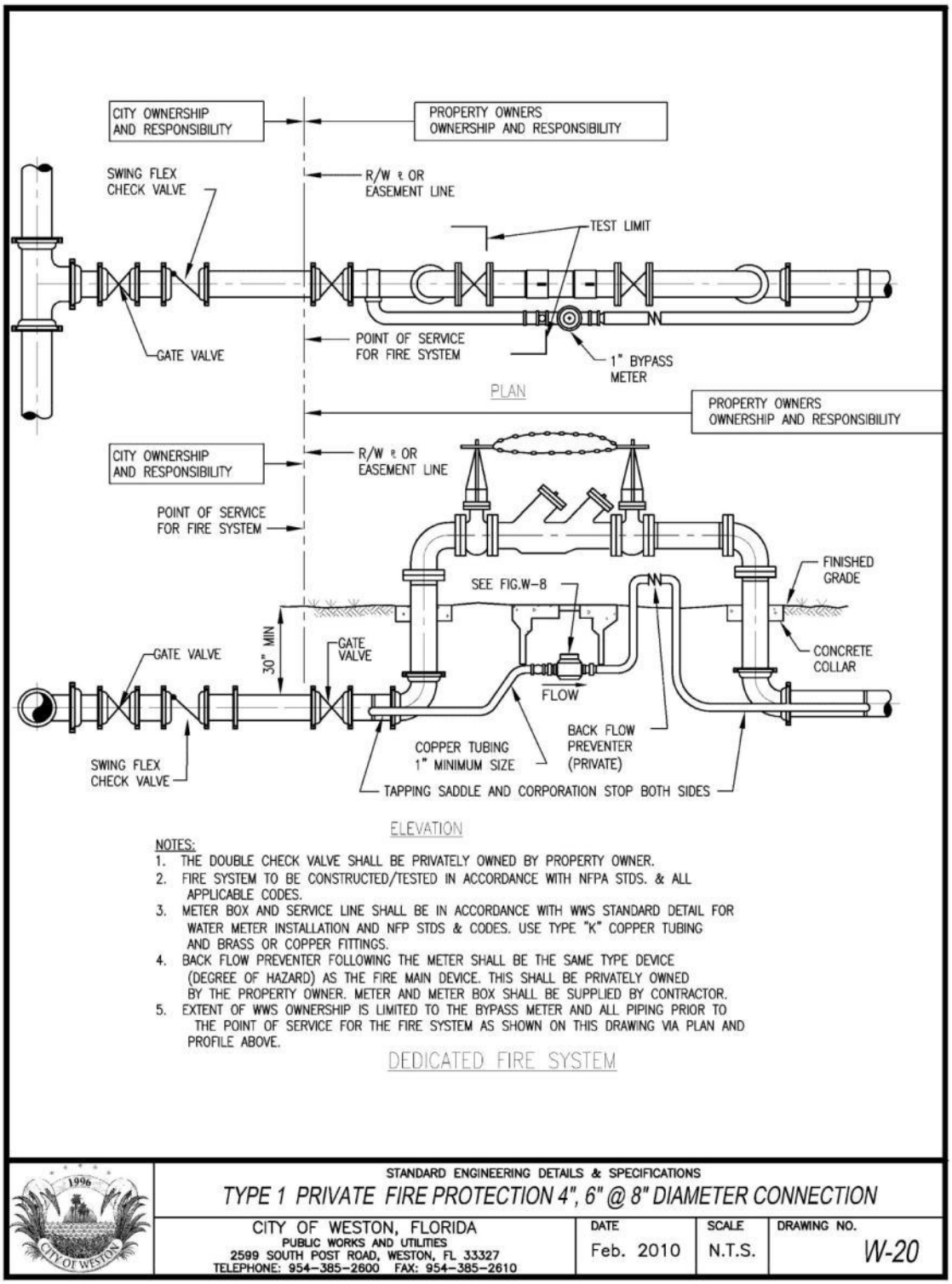

NOTES:

1. THE DOUBLE CHECK VALVE SHALL BE PRIVATELY OWNED BY PROPERTY OWNER.
2. FIRE SYSTEM TO BE CONSTRUCTED/TESTED IN ACCORDANCE WITH NFPA STDS. & ALL APPLICABLE CODES.
3. METER BOX AND SERVICE LINE SHALL BE IN ACCORDANCE WITH WWS STANDARD DETAIL FOR WATER METER INSTALLATION AND NFP STDS & CODES. USE TYPE "K" COPPER TUBING AND BRASS OR COPPER FITTINGS.
4. BACK FLOW PREVENTER FOLLOWING THE METER SHALL BE THE SAME TYPE DEVICE (DEGREE OF HAZARD) AS THE FIRE MAIN DEVICE. THIS SHALL BE PRIVATELY OWNED BY THE PROPERTY OWNER. METER AND METER BOX SHALL BE SUPPLIED BY CONTRACTOR.
5. EXTENT OF WWS OWNERSHIP IS LIMITED TO THE BYPASS METER AND ALL PIPING PRIOR TO THE POINT OF SERVICE FOR THE FIRE SYSTEM AS SHOWN ON THIS DRAWING VIA PLAN AND PROFILE ABOVE.

DEDICATED FIRE SYSTEM

STANDARD ENGINEERING DETAILS & SPECIFICATIONS

TYPE 1 PRIVATE FIRE PROTECTION 4", 6" @ 8" DIAMETER CONNECTION

CITY OF WESTON, FLORIDA PUBLIC WORKS AND UTILITIES 2599 SOUTH POST ROAD, WESTON, FL 33327 TELEPHONE: 954-385-2600 FAX: 954-385-2610	DATE	SCALE	DRAWING NO.
	Feb. 2010	N.T.S.	W-20

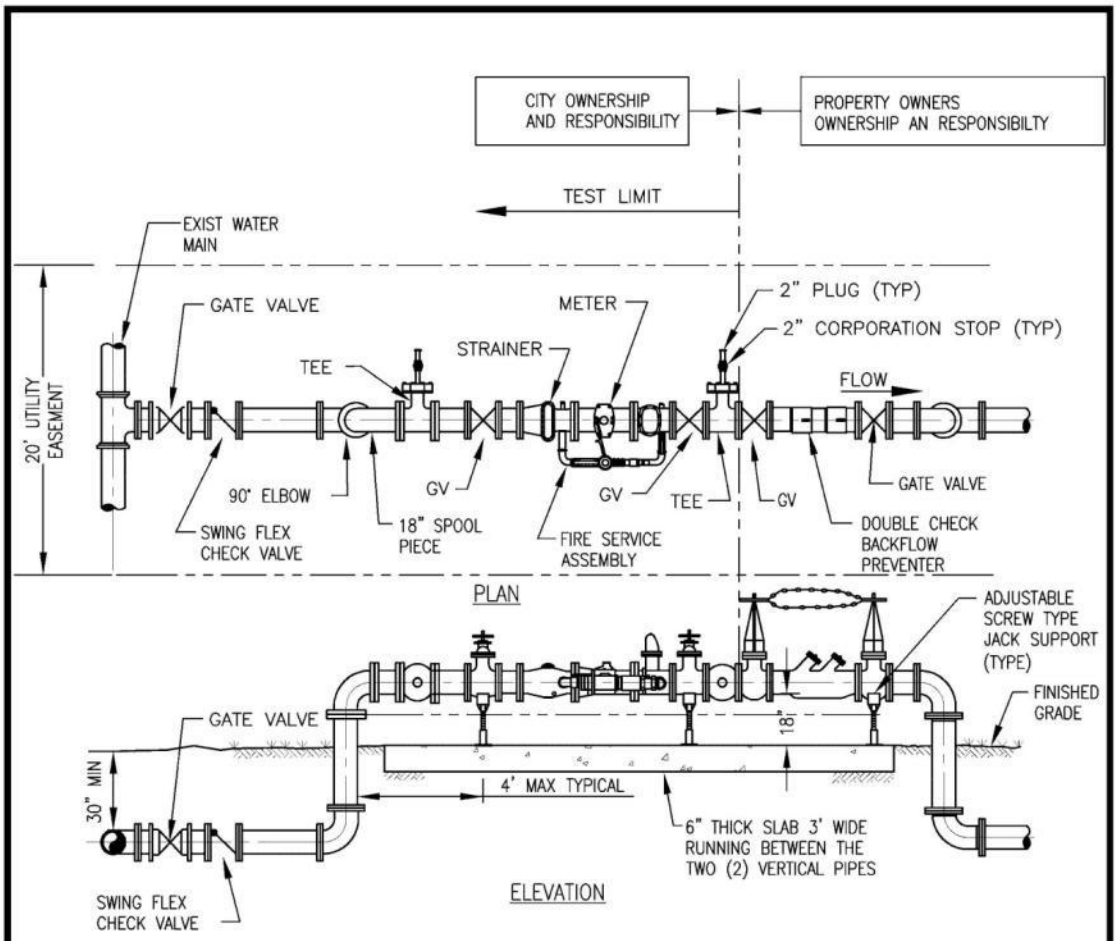

NOTES:

1. THE DOUBLE CHECK VALVE SHALL BE PRIVATELY OWNED BY THE PROPERTY OWNER.
2. BCWWS RESPONSIBILITY IS BETWEEN WATER MAIN AND METER.
3. EASEMENT SHALL BE PROVIDED IN ACCORDANCE WITH BCWWS MINIMUM REQUIREMENTS.
4. FIRELINE FIRE SERVICE ASSEMBLIES TO BE PER MATERIALS REVIEW LIST.
5. ALL ABOVE GROUND PIPE SHALL BE FLANGED, DI (DUCTILE IRON) TYPE.
6. ALL PIPE LEADING FROM WATER MAIN TO FLANGED PIPING SHALL BE D.I. PIPE, RESTRAINED JOINTS.
7. ALL ABOVE GROUND PIPING, FITTINGS, GATE VALVES AND CHECK VALVES AND THE METER ASSEMBLY SHALL BE PAINTED WITH POLYURETHANE COATING (COLOR BEIGE).

COMBINED DOMESTIC WATER SERVICE AND FIRE PROTECTION

STANDARD ENGINEERING DETAILS & SPECIFICATIONS

TYPE 2 PRIVATE FIRE PROTECTION 4", 6" & 8" DIAMETER CONNECTION

CITY OF WESTON, FLORIDA PUBLIC WORKS AND UTILITIES 2599 SOUTH POST ROAD, WESTON, FL 33327 TELEPHONE: 954-385-2600 FAX: 954-385-2610	DATE	SCALE	DRAWING NO.
	Feb. 2010	N.T.S.	W-21

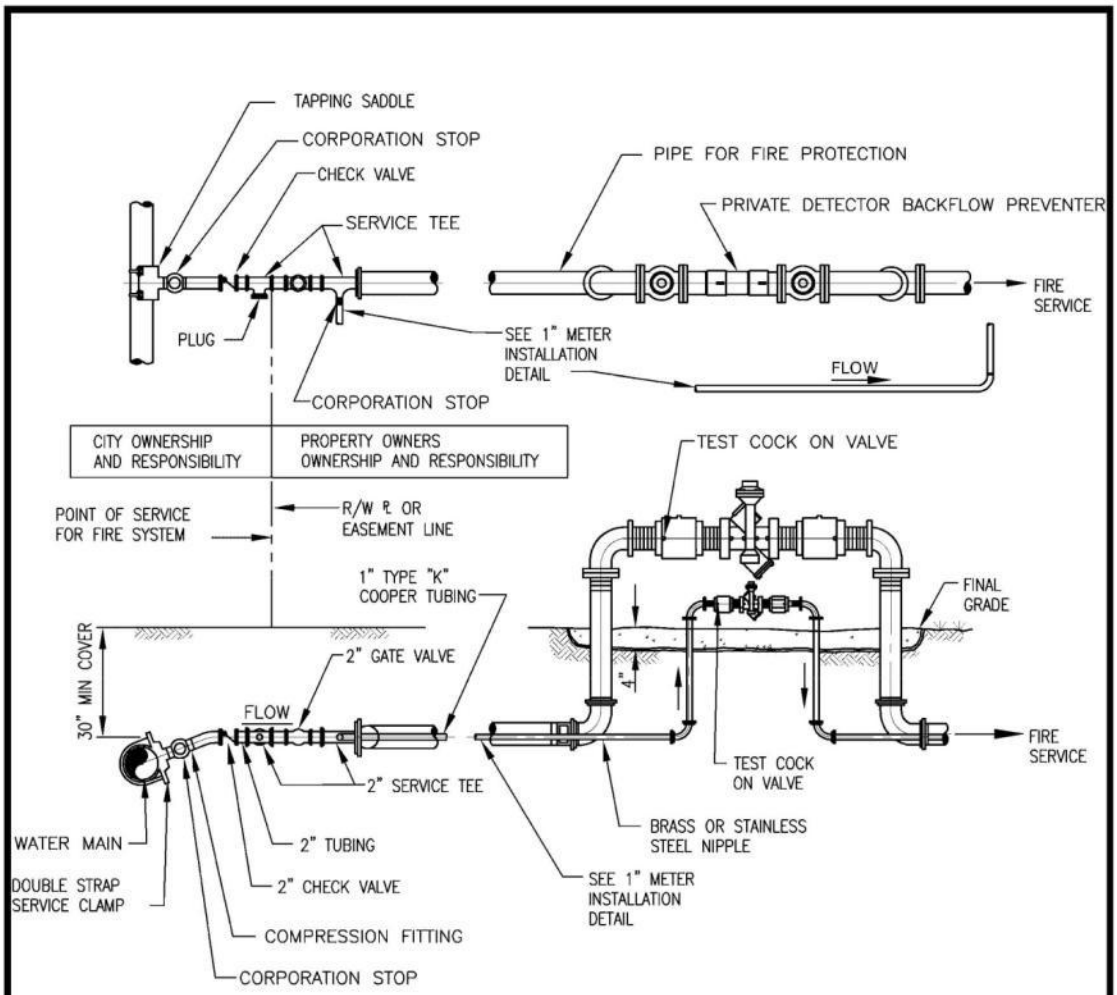

NOTES:

1. THE DOUBLE CHECK VALVE SHALL BE PRIVATELY OWNED BY PROPERTY OWNER.
2. FIRE SYSTEM TO BE CONSTRUCTED/TESTED IN ACCORDANCE WITH NFPA STDS. & ALL APPLICABLE CODES.
3. METER BOX AND SERVICE LINE SHALL BE IN ACCORDANCE WITH WWS STANDARD DETAIL FOR WATER METER INSTALLATION AND NFP STDS & CODES. USE TYPE "K" COPPER TUBING AND BRASS OR COPPER FITTINGS.
4. BACK FLOW PREVENTER FOLLOWING THE METER SHALL BE THE SAME TYPE DEVICE (DEGREE OF HAZARD) AS THE FIRE MAIN DEVICE. THIS SHALL BE PRIVATELY OWNED BY THE PROPERTY OWNER. METER AND METER BOX SHALL BE SUPPLIED BY CONTRACTOR.
5. EXTENT OF WWS OWNERSHIP IS LIMITED TO THE BYPASS METER AND ALL PIPING PRIOR TO THE POINT OF SERVICE FOR THE FIRE SYSTEM AS SHOWN ON THIS DRAWING VIA PLAN AND PROFILE ABOVE.

STANDARD ENGINEERING DETAILS & SPECIFICATIONS

TYPE 3 PRIVATE FIRE PROTECTION 2" DIAMETER CONNECTION

CITY OF WESTON, FLORIDA PUBLIC WORKS AND UTILITIES 2599 SOUTH POST ROAD, WESTON, FL 33327 TELEPHONE: 954-385-2600 FAX: 954-385-2610	DATE	SCALE	DRAWING NO.
	Feb. 2010	N.T.S.	W-22

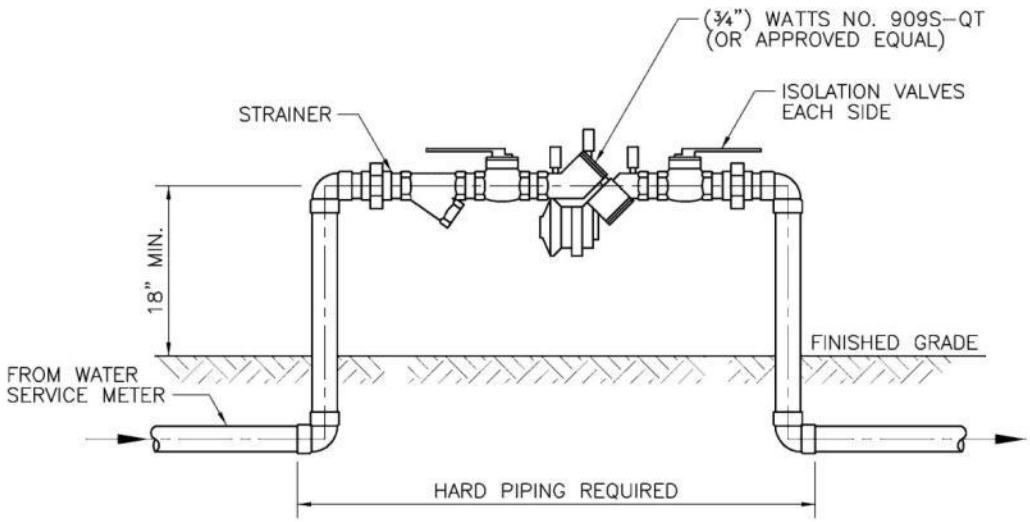

STANDARD ENGINEERING DETAILS & SPECIFICATIONS

STANDARD BACKFLOW PREVENTER

CITY OF WESTON, FLORIDA PUBLIC WORKS AND UTILITIES 2599 SOUTH POST ROAD, WESTON, FL 33327 TELEPHONE: 954–385–2600 FAX: 954–385–2610	DATE	SCALE	DRAWING NO.
	Feb. 2010	N.T.S.	*W-23*

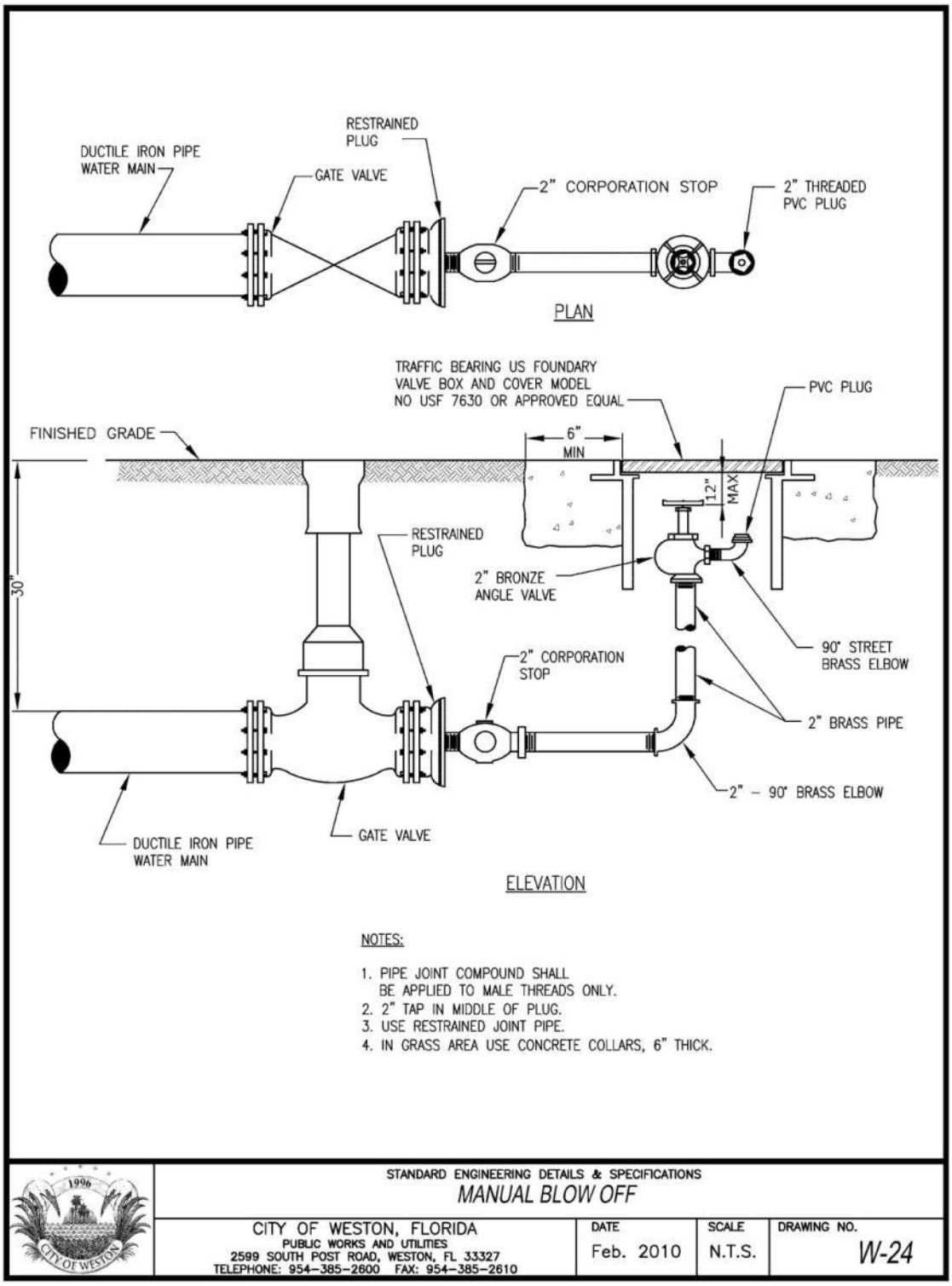
RESTRAINED PLUG
DUCTILE IRON PIPE WATER MAIN
GATE VALVE
2" CORPORATION STOP
2" THREADED PVC PLUG
PLAN
TRAFFIC BEARING US FOUNDARY VALVE BOX AND COVER MODEL NO USF 7630 OR APPROVED EQUAL
PVC PLUG
FINISHED GRADE
6" MIN
12" MAX
30"
RESTRAINED PLUG
2" BRONZE ANGLE VALVE
90° STREET BRASS ELBOW
2" CORPORATION STOP
2" BRASS PIPE
2" – 90° BRASS ELBOW
DUCTILE IRON PIPE WATER MAIN
GATE VALVE
ELEVATION
NOTES:
1. PIPE JOINT COMPOUND SHALL BE APPLIED TO MALE THREADS ONLY.
2. 2" TAP IN MIDDLE OF PLUG.
3. USE RESTRAINED JOINT PIPE.
4. IN GRASS AREA USE CONCRETE COLLARS, 6" THICK.
STANDARD ENGINEERING DETAILS & SPECIFICATIONS
MANUAL BLOW OFF
CITY OF WESTON, FLORIDA
PUBLIC WORKS AND UTILITIES
2599 SOUTH POST ROAD, WESTON, FL 33327
TELEPHONE: 954-385-2600 FAX: 954-385-2610
DATE
Feb. 2010
SCALE
N.T.S.
DRAWING NO.
W-24

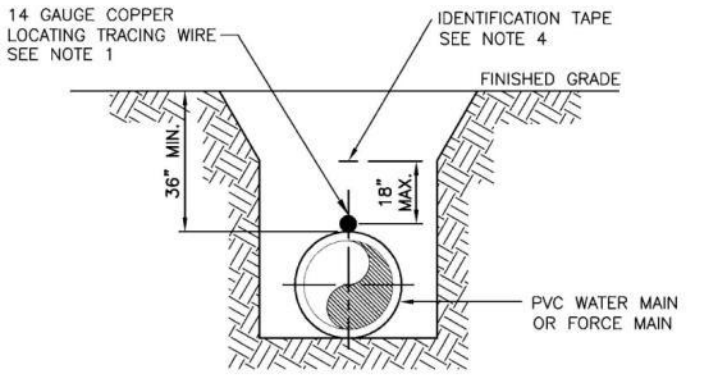

SECTION

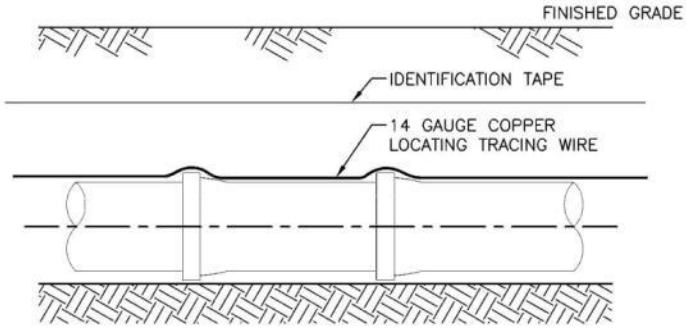

PROFILE

NOTES:

1. PVC PIPE SHALL REQUIRE INSULATED METALLIC LOCATING TRACING WIRE (14 GAUGE COPPER) CAPABLE OF DETECTION BY A CABLE LOCATOR AND SHALL BE BURIED DIRECTLY ON TOP OF THE PIPE AT CENTERLINE.

2. LOCATING WIRE SHALL TERMINATE AT THE TOP OF EACH VALVE BOX AND BE CAPABLE OF EXTENDING 12" ABOVE TOP OF BOX IN SUCH A MANNER SO AS NOT TO INTERFERE WITH VALVE OPERATION.

3. USE PLASTIC CLIPS AS NECESSARY TO HOLD WIRE DIRECTLY ON THE TOP OF THE PIPE.

4. DETECTABLE IDENTIFICATION TAPE SHALL BE INSTALLED DIRECTLY OVER CENTERLINE OF ALL PIPE AT 18–INCHES ABOVE THE TOP OF THE PIPE. SEE "ENGINEERING STANDARDS," SECTIONS 4.03–P, 6.03–N AND 8.03–I FOR FURTHER DETAILS.

	STANDARD ENGINEERING DETAILS & SPECIFICATIONS *PVC PIPE LOCATING WIRE AND IDENTIFICATION TAPE DETAIL*			
	CITY OF WESTON, FLORIDA PUBLIC WORKS AND UTILITIES 2599 SOUTH POST ROAD, WESTON, FL 33327 TELEPHONE: 954–385–2600 FAX: 954–385–2610	DATE Feb. 2010	SCALE N.T.S.	DRAWING NO. *W-25*

§127.54 STANDARD SANITARY SEWER DETAILS

Detail No.	Description
S-1	Wye Branch Connection
S-2	Deep Service Lateral
S-3	Shallow Service Lateral
S-4	Cleanout
S-5	Precast Outside Conflict Manhole
S-6	Precast Shallow Manhole (6′-0″ depth and greater)
S-7	Eccentric Manhole (6′-0″ depth and greater)
S-8	Precast Outside Drop Manhole
S-9	Inside Drop Manhole
S-10	Manhole Coupling Detail
S-11	Manhole Flow Channels
S-12	Gate Valve and Valve Box Detail
S-13	Manual Air Release Valve
S-14	Air Release Vault Detail
S-15	Offset Air Release Valve Detail
S-16	Air Release Vault Access Cover
S-17	Automatic Blow Off

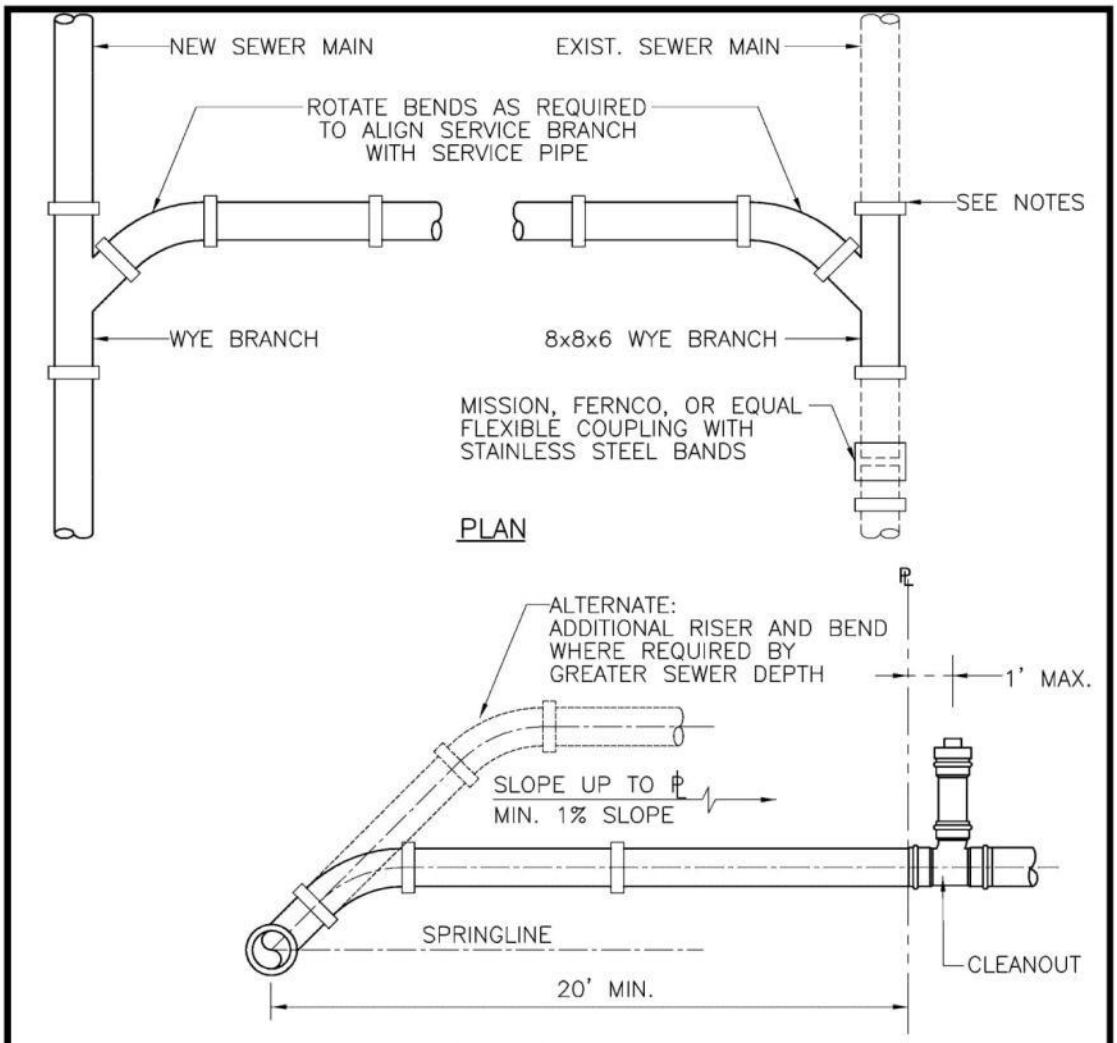

NOTES:

1. SINGLE SERVICE CONNECTIONS SHALL USE 6" PIPE AND FITTINGS.
2. USE RISER CONNECTIONS WHERE INVERT OF SEWER IS MORE THAN 7'-0" DEEP.
3. WHERE BELL WYE AND SPIGOT OF EXISTING MAIN ARE NOT COMPATIBLE, USE A SECOND FLEXIBLE COUPLING.
4. RIGID COUPLINGS ARE ALSO ACCEPTABLE.
5. CONNECTION SHALL NOT BE MADE BELOW SPRINGLINE OF MAIN.

	STANDARD ENGINEERING DETAILS & SPECIFICATIONS *WYE BRANCH CONNECTION*			
	CITY OF WESTON, FLORIDA PUBLIC WORKS AND UTILITIES 2599 SOUTH POST ROAD, WESTON, FL 33327 TELEPHONE: 954-385-2600 FAX: 954-385-2610	DATE Feb. 2010	SCALE N.T.S.	DRAWING NO. S-1

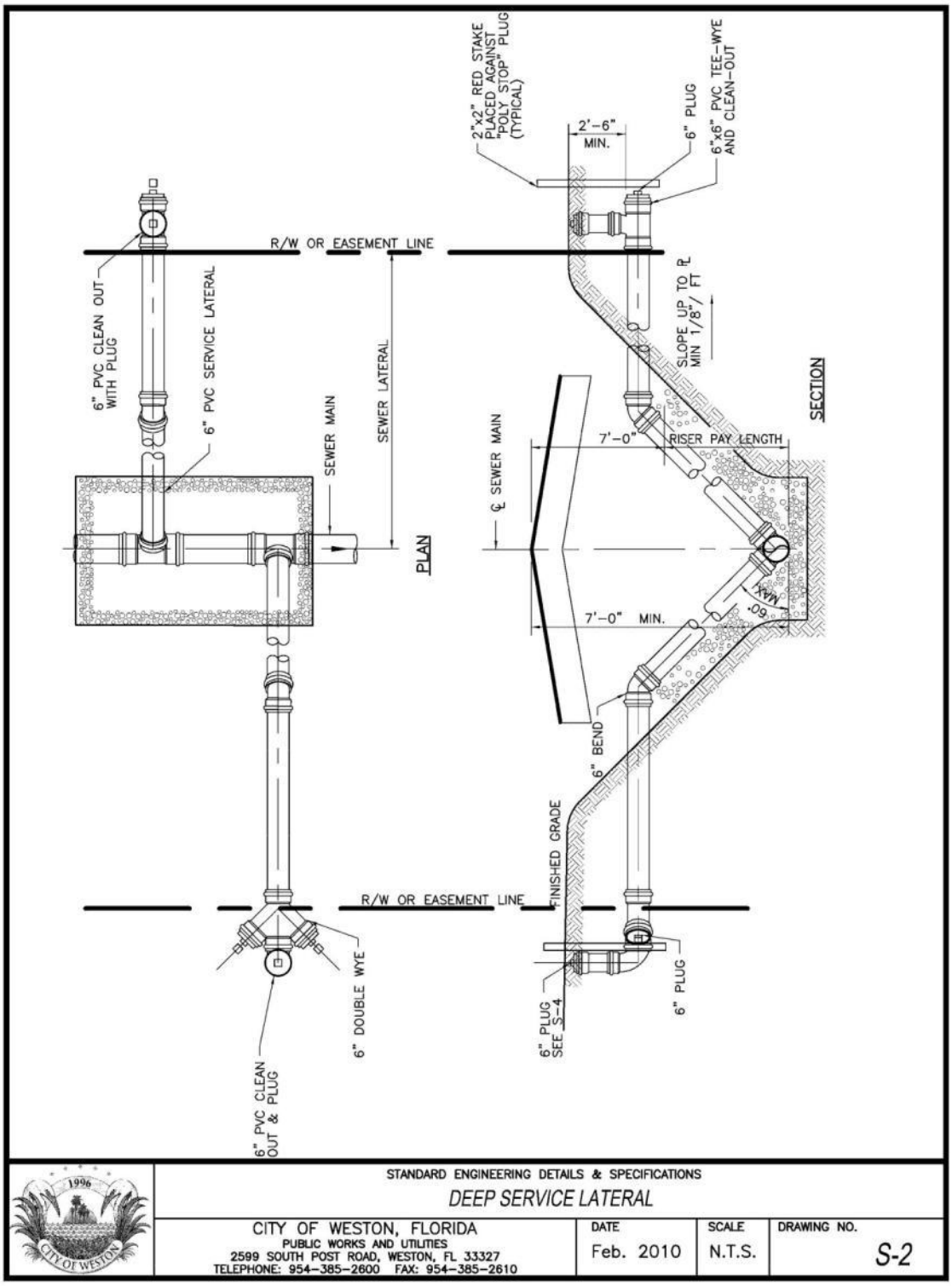

	STANDARD ENGINEERING DETAILS & SPECIFICATIONS *DEEP SERVICE LATERAL*			
	CITY OF WESTON, FLORIDA PUBLIC WORKS AND UTILITIES 2599 SOUTH POST ROAD, WESTON, FL 33327 TELEPHONE: 954-385-2600 FAX: 954-385-2610	DATE Feb. 2010	SCALE N.T.S.	DRAWING NO. S-2

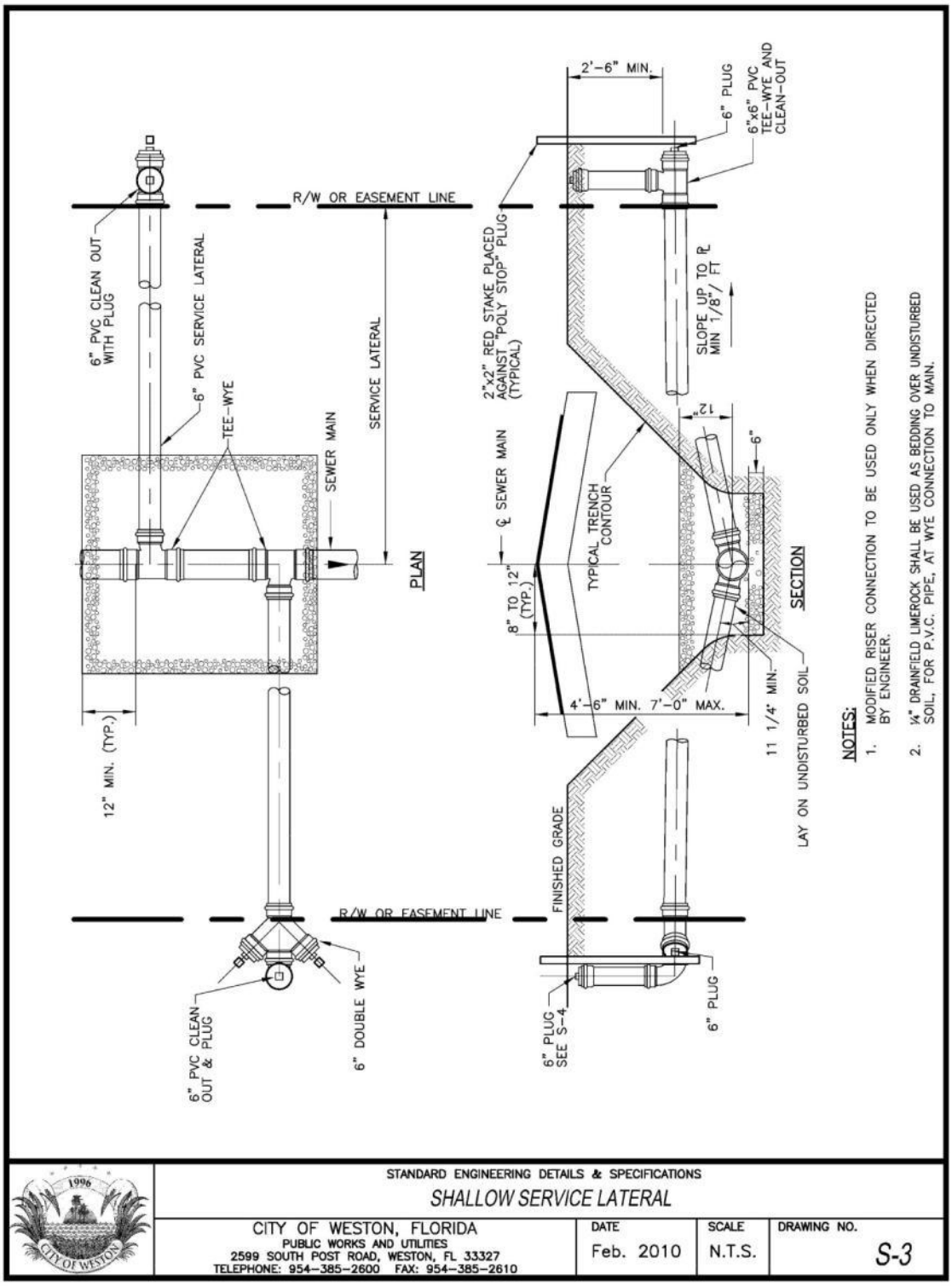
6" PVC CLEAN OUT WITH PLUG
6" PVC SERVICE LATERAL
TEE-WYE
SEWER MAIN
SERVICE LATERAL
R/W OR EASEMENT LINE
PLAN
12" MIN. (TYP.)
6" PVC CLEAN OUT & PLUG
6" DOUBLE WYE
R/W OR EASEMENT LINE
2'-6" MIN.
6" PLUG
6"x6" PVC TEE-WYE AND CLEAN-OUT
2"x2" RED STAKE PLACED AGAINST "POLY STOP" PLUG (TYPICAL)
SLOPE UP TO ℄ MIN 1/8"/ FT
℄ SEWER MAIN
TYPICAL TRENCH CONTOUR
12"
6"
8" TO 12" (TYP.)
4'-6" MIN. 7'-0" MAX.
11 1/4" MIN.
LAY ON UNDISTURBED SOIL
SECTION
FINISHED GRADE
6" PLUG SEE S-4
6" PLUG
NOTES:
1. MODIFIED RISER CONNECTION TO BE USED ONLY WHEN DIRECTED BY ENGINEER.
2. ¼" DRAINFIELD LIMEROCK SHALL BE USED AS BEDDING OVER UNDISTURBED SOIL, FOR P.V.C. PIPE, AT WYE CONNECTION TO MAIN.
STANDARD ENGINEERING DETAILS & SPECIFICATIONS
SHALLOW SERVICE LATERAL
CITY OF WESTON, FLORIDA
PUBLIC WORKS AND UTILITIES
2599 SOUTH POST ROAD, WESTON, FL 33327
TELEPHONE: 954-385-2600 FAX: 954-385-2610
DATE
Feb. 2010
SCALE
N.T.S.
DRAWING NO.
S-3

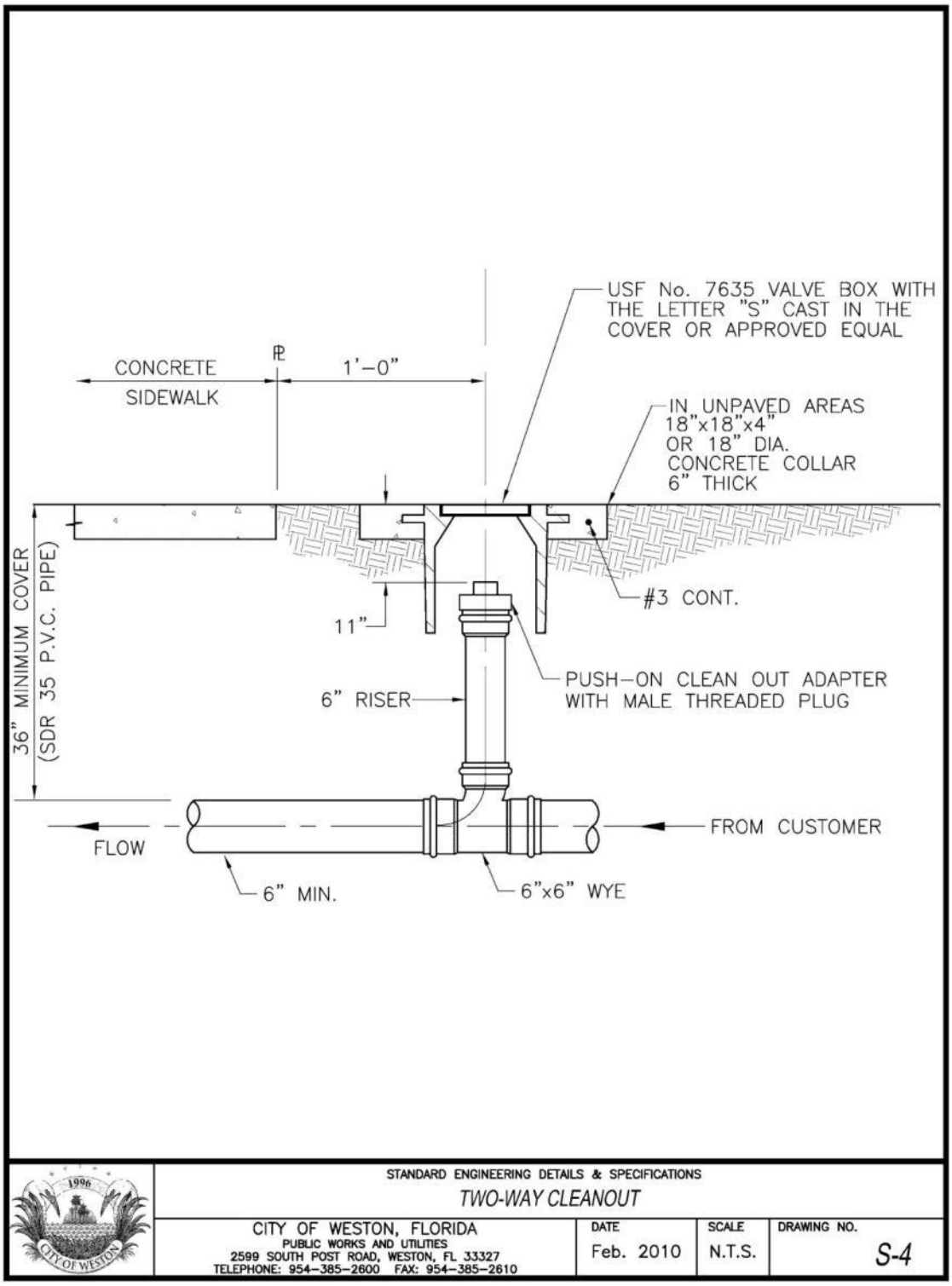
USF No. 7635 VALVE BOX WITH THE LETTER "S" CAST IN THE COVER OR APPROVED EQUAL
CONCRETE SIDEWALK
℄
1'-0"
IN UNPAVED AREAS 18"x18"x4" OR 18" DIA. CONCRETE COLLAR 6" THICK
36" MINIMUM COVER (SDR 35 P.V.C. PIPE)
#3 CONT.
11"
PUSH-ON CLEAN OUT ADAPTER WITH MALE THREADED PLUG
6" RISER
FROM CUSTOMER
FLOW
6" MIN.
6"x6" WYE
STANDARD ENGINEERING DETAILS & SPECIFICATIONS
TWO-WAY CLEANOUT
CITY OF WESTON, FLORIDA
PUBLIC WORKS AND UTILITIES
2599 SOUTH POST ROAD, WESTON, FL 33327
TELEPHONE: 954-385-2600 FAX: 954-385-2610
DATE
Feb. 2010
SCALE
N.T.S.
DRAWING NO.
S-4

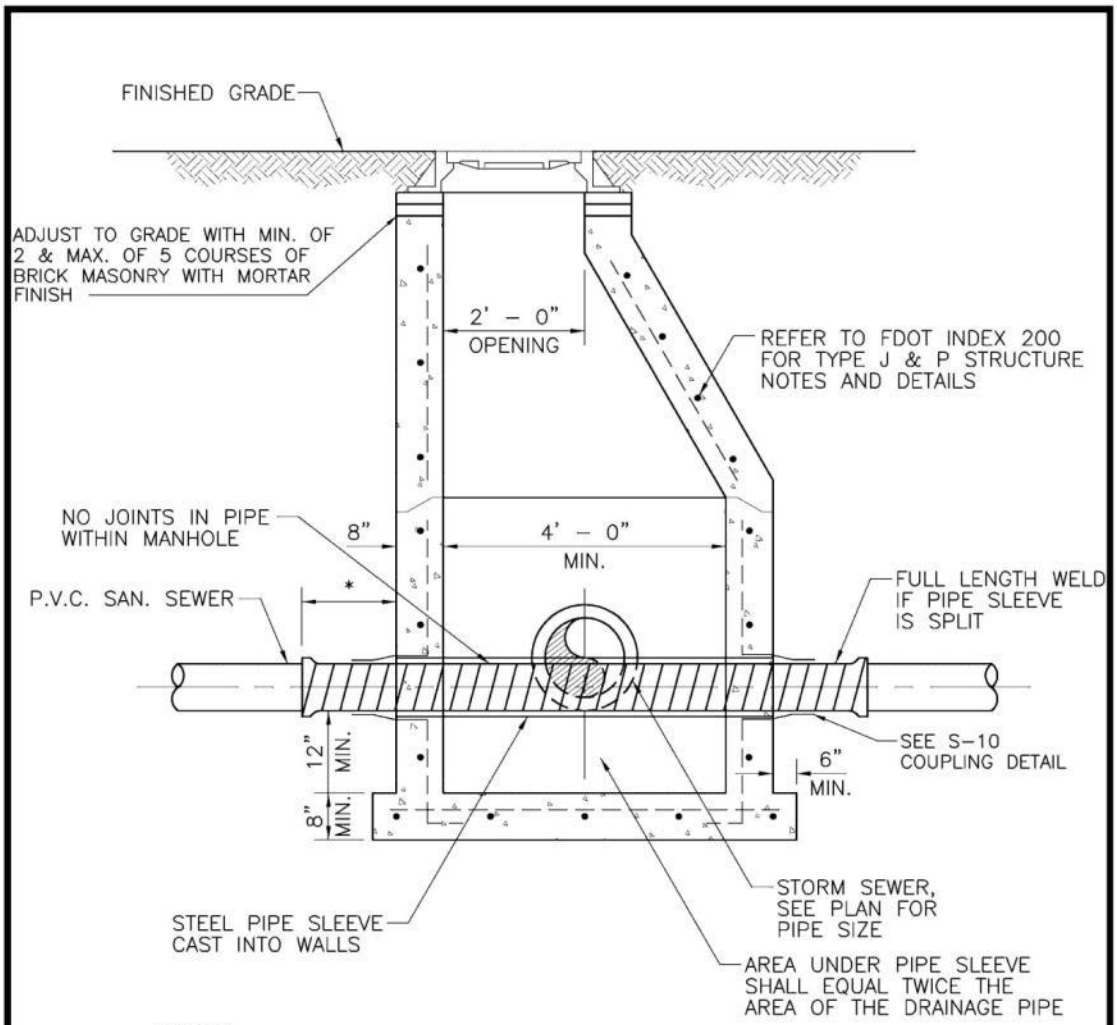

NOTES:

1. ALL CONFLICT MANHOLES SHALL CONFORM TO THE DETAILS ON THIS DRAWING, AND TO THE REQUIREMENTS OF ASTM C–478.
2. POTABLE WATER PIPE SHALL NOT PASS THROUGH OR CONTACT SANITARY SEWER MANHOLE.
3. (*) 12" MINIMUM – 18" MAXIMUM

	STANDARD ENGINEERING DETAILS & SPECIFICATIONS *PRECAST OUTSIDE CONFLICT MANHOLE*			
	CITY OF WESTON, FLORIDA PUBLIC WORKS AND UTILITIES 2599 SOUTH POST ROAD, WESTON, FL 33327 TELEPHONE: 954–385–2600 FAX: 954–385–2610	DATE Feb. 2010	SCALE N.T.S.	DRAWING NO. S-5

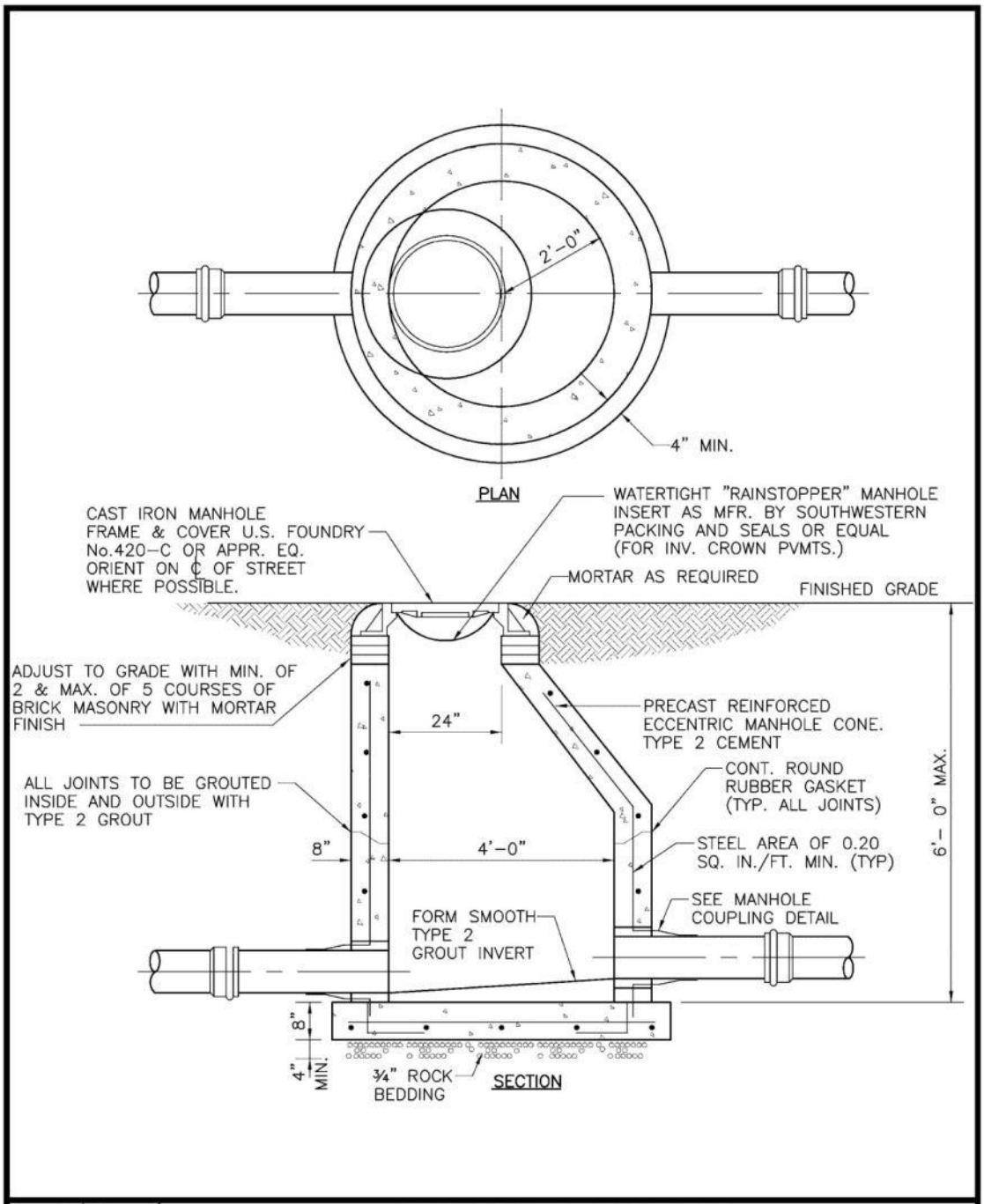

STANDARD ENGINEERING DETAILS & SPECIFICATIONS

PRECAST SHALLOW MANHOLE (6'-0" DEPTH & GREATER)

CITY OF WESTON, FLORIDA PUBLIC WORKS AND UTILITIES 2599 SOUTH POST ROAD, WESTON, FL 33327 TELEPHONE: 954-385-2600 FAX: 954-385-2610	DATE	SCALE	DRAWING NO.
	Feb. 2010	N.T.S.	S-6

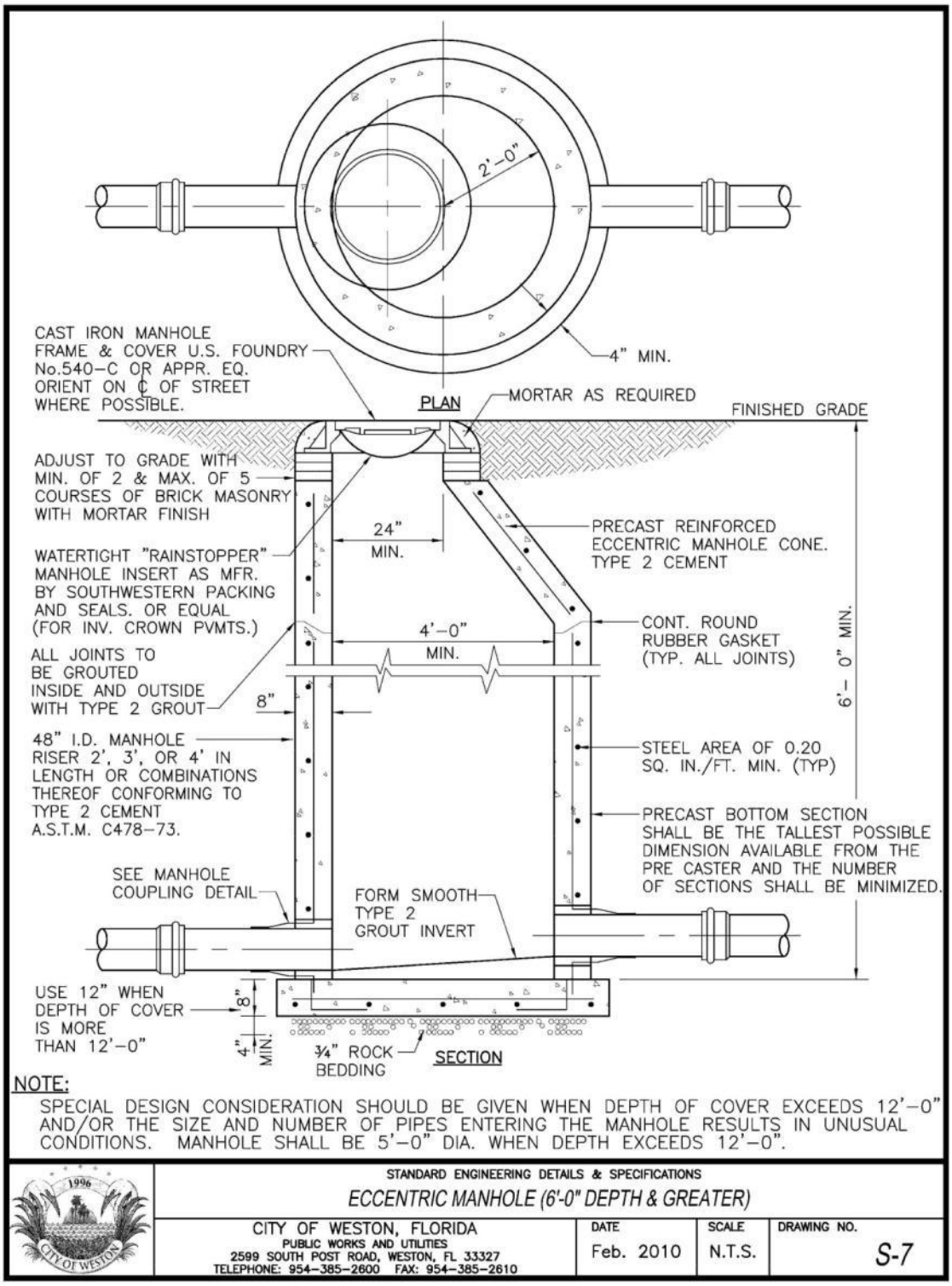
2'-0"
4" MIN.
CAST IRON MANHOLE FRAME & COVER U.S. FOUNDRY No.540-C OR APPR. EQ. ORIENT ON ℄ OF STREET WHERE POSSIBLE.
PLAN
MORTAR AS REQUIRED
FINISHED GRADE
ADJUST TO GRADE WITH MIN. OF 2 & MAX. OF 5 COURSES OF BRICK MASONRY WITH MORTAR FINISH
24" MIN.
PRECAST REINFORCED ECCENTRIC MANHOLE CONE. TYPE 2 CEMENT
WATERTIGHT "RAINSTOPPER" MANHOLE INSERT AS MFR. BY SOUTHWESTERN PACKING AND SEALS. OR EQUAL (FOR INV. CROWN PVMTS.)
4'-0" MIN.
CONT. ROUND RUBBER GASKET (TYP. ALL JOINTS)
6'-0" MIN.
ALL JOINTS TO BE GROUTED INSIDE AND OUTSIDE WITH TYPE 2 GROUT
8"
48" I.D. MANHOLE RISER 2', 3', OR 4' IN LENGTH OR COMBINATIONS THEREOF CONFORMING TO TYPE 2 CEMENT A.S.T.M. C478-73.
STEEL AREA OF 0.20 SQ. IN./FT. MIN. (TYP)
PRECAST BOTTOM SECTION SHALL BE THE TALLEST POSSIBLE DIMENSION AVAILABLE FROM THE PRE CASTER AND THE NUMBER OF SECTIONS SHALL BE MINIMIZED.
SEE MANHOLE COUPLING DETAIL
FORM SMOOTH TYPE 2 GROUT INVERT
USE 12" WHEN DEPTH OF COVER IS MORE THAN 12'-0"
8"
4" MIN.
¾" ROCK BEDDING
SECTION
NOTE:
SPECIAL DESIGN CONSIDERATION SHOULD BE GIVEN WHEN DEPTH OF COVER EXCEEDS 12'-0" AND/OR THE SIZE AND NUMBER OF PIPES ENTERING THE MANHOLE RESULTS IN UNUSUAL CONDITIONS. MANHOLE SHALL BE 5'-0" DIA. WHEN DEPTH EXCEEDS 12'-0".
STANDARD ENGINEERING DETAILS & SPECIFICATIONS
ECCENTRIC MANHOLE (6'-0" DEPTH & GREATER)
CITY OF WESTON, FLORIDA
PUBLIC WORKS AND UTILITIES
2599 SOUTH POST ROAD, WESTON, FL 33327
TELEPHONE: 954-385-2600 FAX: 954-385-2610
DATE
Feb. 2010
SCALE
N.T.S.
DRAWING NO.
S-7

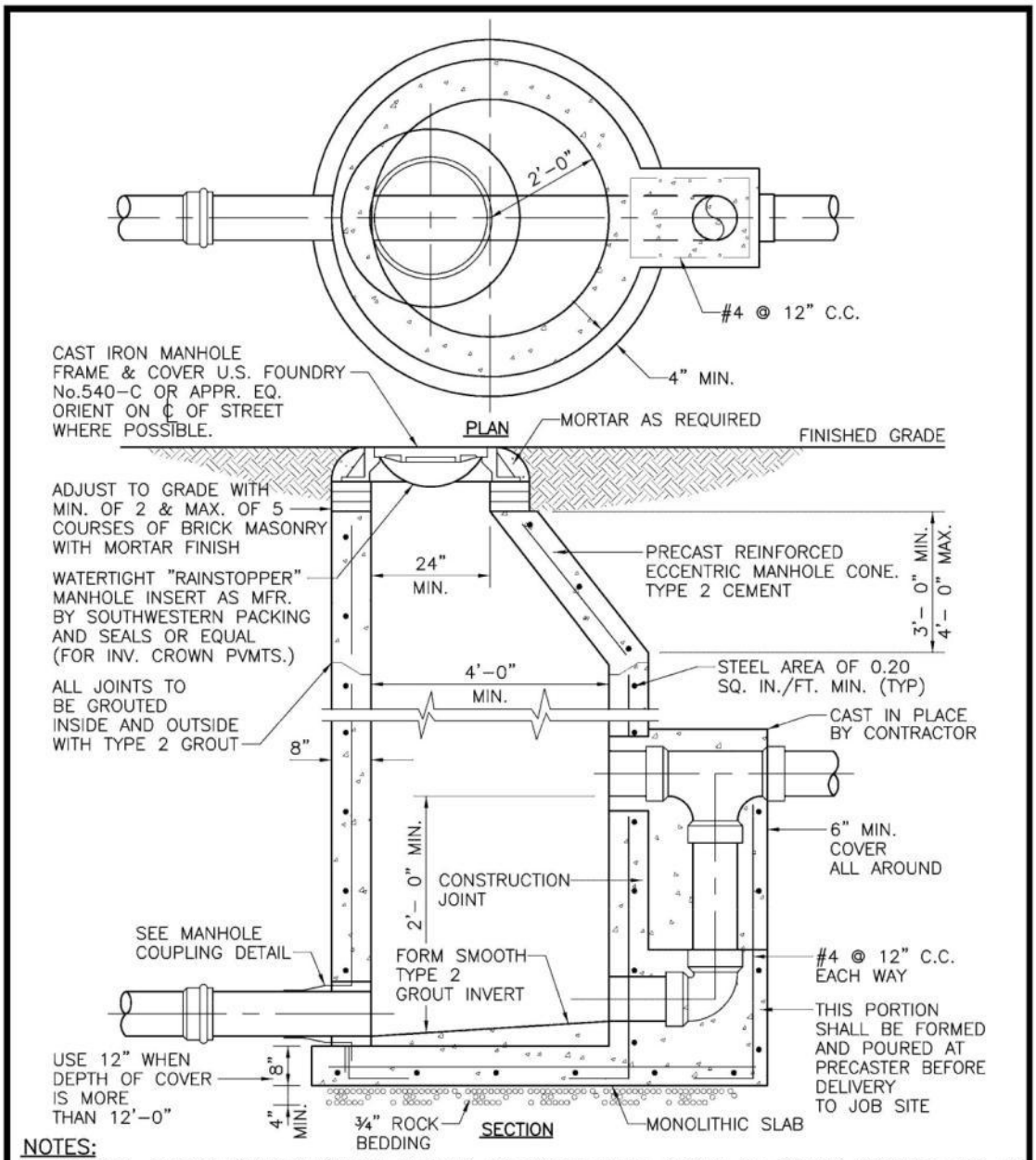

NOTES:

1. SPECIAL DESIGN CONSIDERATION SHOULD BE GIVEN WHEN DEPTH OF COVER EXCEEDS 12'-0" AND/OR THE SIZE AND NUMBER OF PIPES ENTERING THE MANHOLE RESULTS IN UNUSUAL CONDITIONS. MANHOLE SHALL BE 5'-0" DIA. WHEN DEPTH EXCEEDS 12'-0".
2. ALL REQUIREMENTS FOR ECCENTRIC PRECAST MANHOLES APPLY TO PRECAST OUTSIDE DROP MANHOLES.

	STANDARD ENGINEERING DETAILS & SPECIFICATIONS *PRECAST OUTSIDE DROP MANHOLE*			
	CITY OF WESTON, FLORIDA PUBLIC WORKS AND UTILITIES 2599 SOUTH POST ROAD, WESTON, FL 33327 TELEPHONE: 954-385-2600 FAX: 954-385-2610	DATE Feb. 2010	SCALE N.T.S.	DRAWING NO. S-8

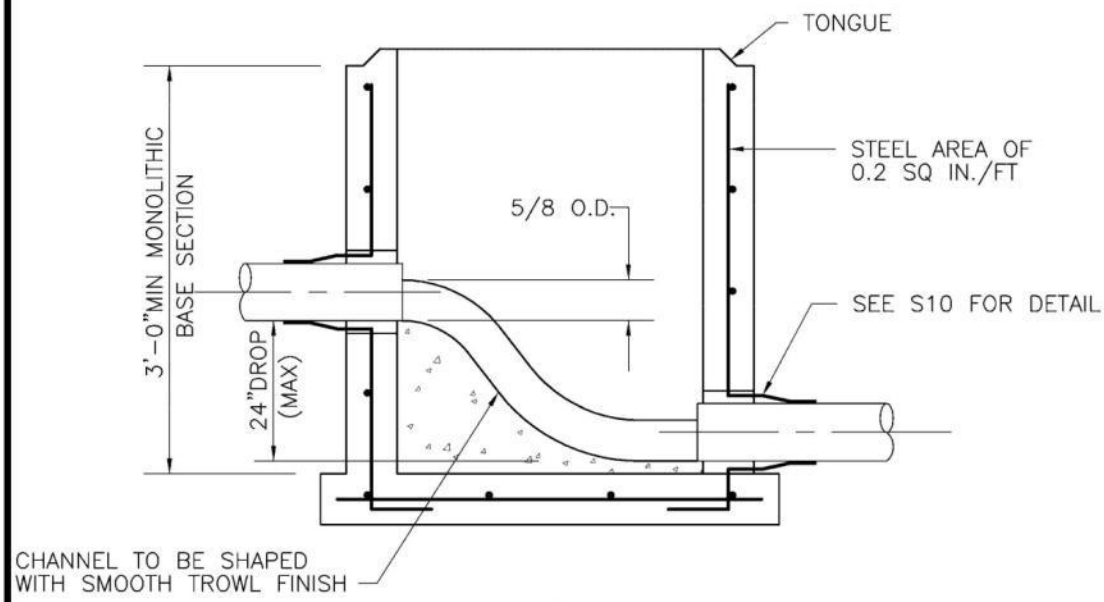

SECTION

NOTE:
ALL REQUIREMENTS FOR ECCENTRIC PRECAST MANHOLE APPLY TO DROP MANHOLES

	STANDARD ENGINEERING DETAILS & SPECIFICATIONS *INSIDE DROP MANHOLE*			
	CITY OF WESTON, FLORIDA PUBLIC WORKS AND UTILITIES 2599 SOUTH POST ROAD, WESTON, FL 33327 TELEPHONE: 954-385-2600 FAX: 954-385-2610	DATE Feb. 2010	SCALE N.T.S.	DRAWING NO. *S-9*

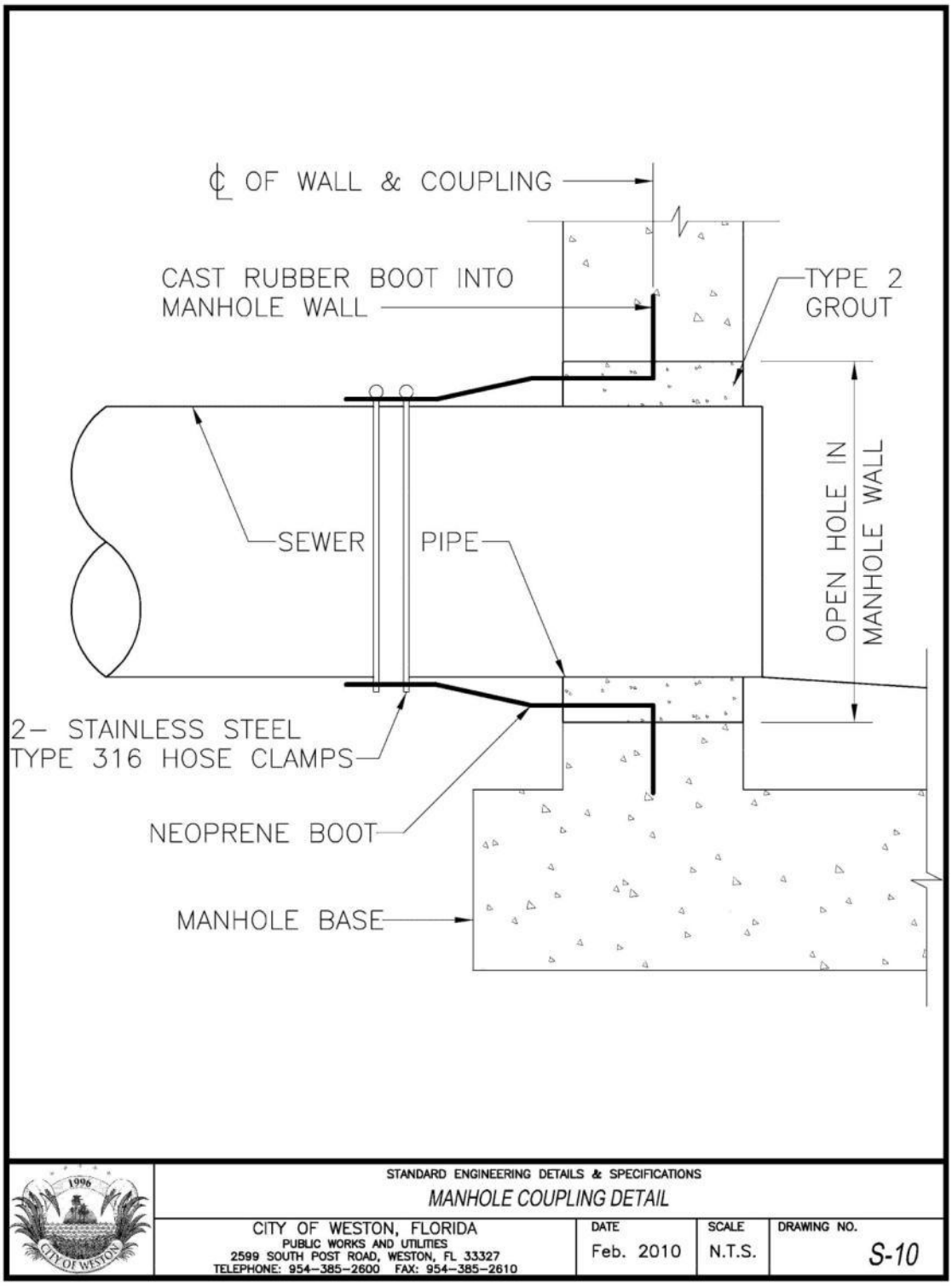
℄ OF WALL & COUPLING
CAST RUBBER BOOT INTO MANHOLE WALL
TYPE 2 GROUT
OPEN HOLE IN MANHOLE WALL
SEWER PIPE
2– STAINLESS STEEL TYPE 316 HOSE CLAMPS
NEOPRENE BOOT
MANHOLE BASE
STANDARD ENGINEERING DETAILS & SPECIFICATIONS
MANHOLE COUPLING DETAIL
CITY OF WESTON, FLORIDA
PUBLIC WORKS AND UTILITIES
2599 SOUTH POST ROAD, WESTON, FL 33327
TELEPHONE: 954–385–2600 FAX: 954–385–2610
DATE
Feb. 2010
SCALE
N.T.S.
DRAWING NO.
S-10

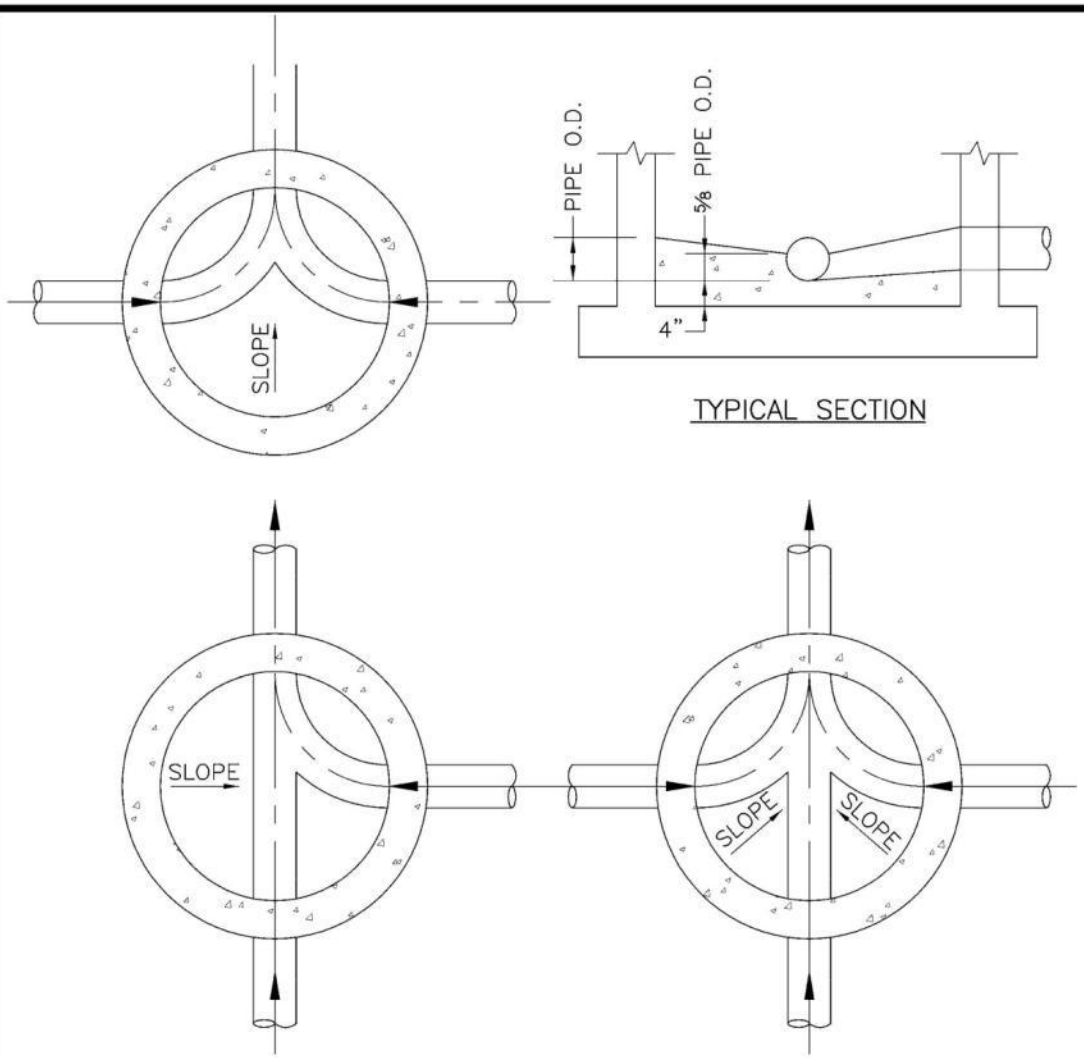

NOTES:

1. INVERT CHANNELS TO BE CONSTRUCTED FOR SMOOTH FLOW WITH NO OBSTRUCTIONS.
2. SPILLWAYS SHALL BE CONSTRUCTED BETWEEN PIPES WITH DIFFERENT INVERT ELEVATIONS PROVIDING FOR SMOOTH FLOWS.
3. CHANNELS TO BE FORMED IN ALL MANHOLES TO ACCEPT T.V. CAMERA.
4. WHEN DIRECTIONAL CHANNELS EXCEEDING 45° OCCUR, AN EXTRA FLOW LINE ELEVATION DROP OF 0.05' ACROSS MANHOLE SHALL BE PROVIDED.

	STANDARD ENGINEERING DETAILS & SPECIFICATIONS *MANHOLE FLOW CHANNELS*			
	CITY OF WESTON, FLORIDA PUBLIC WORKS AND UTILITIES 2599 SOUTH POST ROAD, WESTON, FL 33327 TELEPHONE: 954-385-2600 FAX: 954-385-2610	DATE Feb. 2010	SCALE N.T.S.	DRAWING NO. S-11

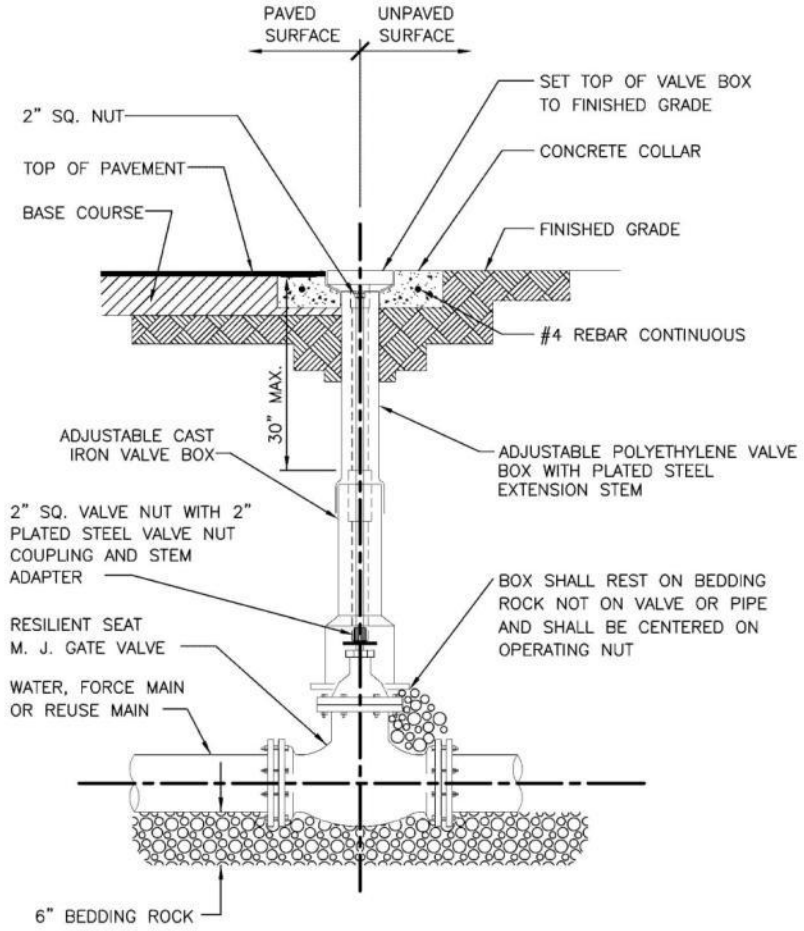

NOTES:

1. VALVE COLLAR SHALL BE 24"X24"X6" (MIN.)
2. WHEN WATER VALVE IS NOT LOCATED IN PAVEMENT, PLACE A WHITE PAVEMENT REFLECTOR MARKER IN THE DRIVE LANE, ADJACENT TO THE VALVE.
3. VALVE BOX COVER SHALL BE PAINTED BLUE WITH THE DESIGNATION "WATER"; GREEN WITH THE DESIGNATION "SEWER"; PURPLE WITH THE DESIGNATION "REUSE".

STANDARD ENGINEERING DETAILS & SPECIFICATIONS

GATE VALVE AND VALVE BOX DETAIL

CITY OF WESTON, FLORIDA PUBLIC WORKS AND UTILITIES 2599 SOUTH POST ROAD, WESTON, FL 33327 TELEPHONE: 954-385-2600 FAX: 954-385-2610	DATE	SCALE	DRAWING NO.
	Feb. 2010	N.T.S.	S-12

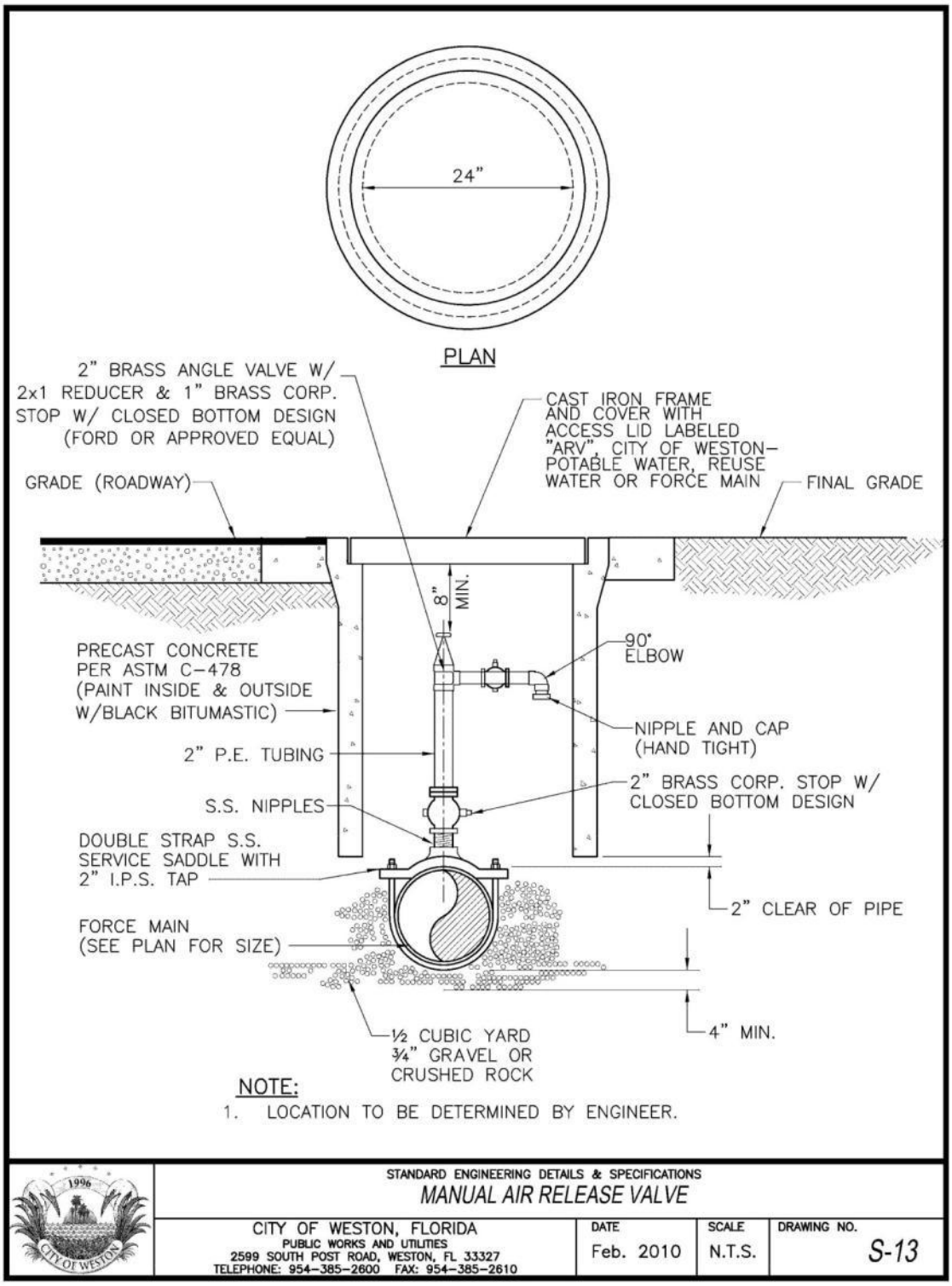
24"
PLAN
2" BRASS ANGLE VALVE W/ 2x1 REDUCER & 1" BRASS CORP. STOP W/ CLOSED BOTTOM DESIGN (FORD OR APPROVED EQUAL)
CAST IRON FRAME AND COVER WITH ACCESS LID LABELED "ARV", CITY OF WESTON– POTABLE WATER, REUSE WATER OR FORCE MAIN
GRADE (ROADWAY)
FINAL GRADE
8" MIN.
PRECAST CONCRETE PER ASTM C–478 (PAINT INSIDE & OUTSIDE W/BLACK BITUMASTIC)
90° ELBOW
NIPPLE AND CAP (HAND TIGHT)
2" P.E. TUBING
2" BRASS CORP. STOP W/ CLOSED BOTTOM DESIGN
S.S. NIPPLES
DOUBLE STRAP S.S. SERVICE SADDLE WITH 2" I.P.S. TAP
2" CLEAR OF PIPE
FORCE MAIN (SEE PLAN FOR SIZE)
4" MIN.
½ CUBIC YARD ¾" GRAVEL OR CRUSHED ROCK
NOTE:
1. LOCATION TO BE DETERMINED BY ENGINEER.
STANDARD ENGINEERING DETAILS & SPECIFICATIONS
MANUAL AIR RELEASE VALVE
CITY OF WESTON, FLORIDA
PUBLIC WORKS AND UTILITIES
2599 SOUTH POST ROAD, WESTON, FL 33327
TELEPHONE: 954–385–2600 FAX: 954–385–2610
DATE
Feb. 2010
SCALE
N.T.S.
DRAWING NO.
S-13

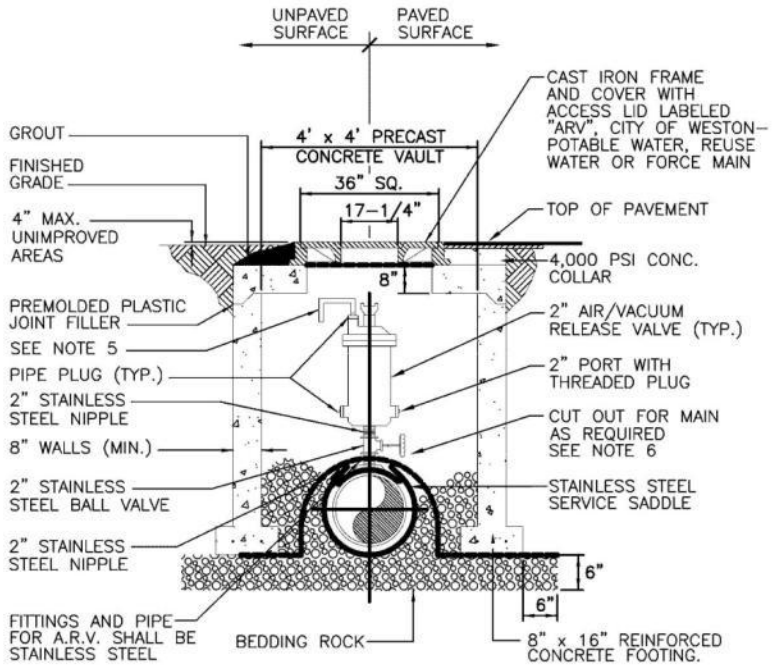

NOTES:

1. ABOVE DETAIL IS BASED ON 2" COMBINATION AIR/VACUUM RELEASE VALVE, CHANGE PIPE AND FITTINGS ACCORDINGLY FOR OTHER VALVE SIZES AND TYPES. VALVE SIZES TO BE DETERMINED BY THE ENGINEER AND APPROVED BY THE CITY PRIOR TO INSTALLATION.
2. THE BOTTOM OF THE PRECAST VAULT SHALL BE PLACED AT THE SAME ELEVATION AS THE BOTTOM OF THE PIPE.
3. ARV VAULT WALLS TO BE COATED INSIDE AND OUTSIDE WITH 16 MIL. THK. APPROVED ASPHALTIC COATING.
4. LIFT HOLES ARE TO BE SEALED WITH MORTAR INSIDE AND OUTSIDE AFTER INSTALLATION. ALL OPENINGS SHALL BE SEALED WITH WATERPROOF, EXPANDING GROUT.
5. WASTEWATER VALVES TO BE EQUIPPED WITH THREADED VENT PIPE THAT DIRECTS VENT DOWNWARD.
6. VAULT SHALL NOT REST ON PIPE. ALLOW 9" MIN. SEPARATION.
7. WHEN USED ON A FORCE MAIN ALL FITTINGS SHALL BE STAINLESS STEEL.

1996 CITY OF WESTON	STANDARD ENGINEERING DETAILS & SPECIFICATIONS *AIR RELEASE VALVE DETAIL*			
	CITY OF WESTON, FLORIDA PUBLIC WORKS AND UTILITIES 2599 SOUTH POST ROAD, WESTON, FL 33327 TELEPHONE: 954-385-2600 FAX: 954-385-2610	DATE Feb. 2010	SCALE N.T.S.	DRAWING NO. S-14

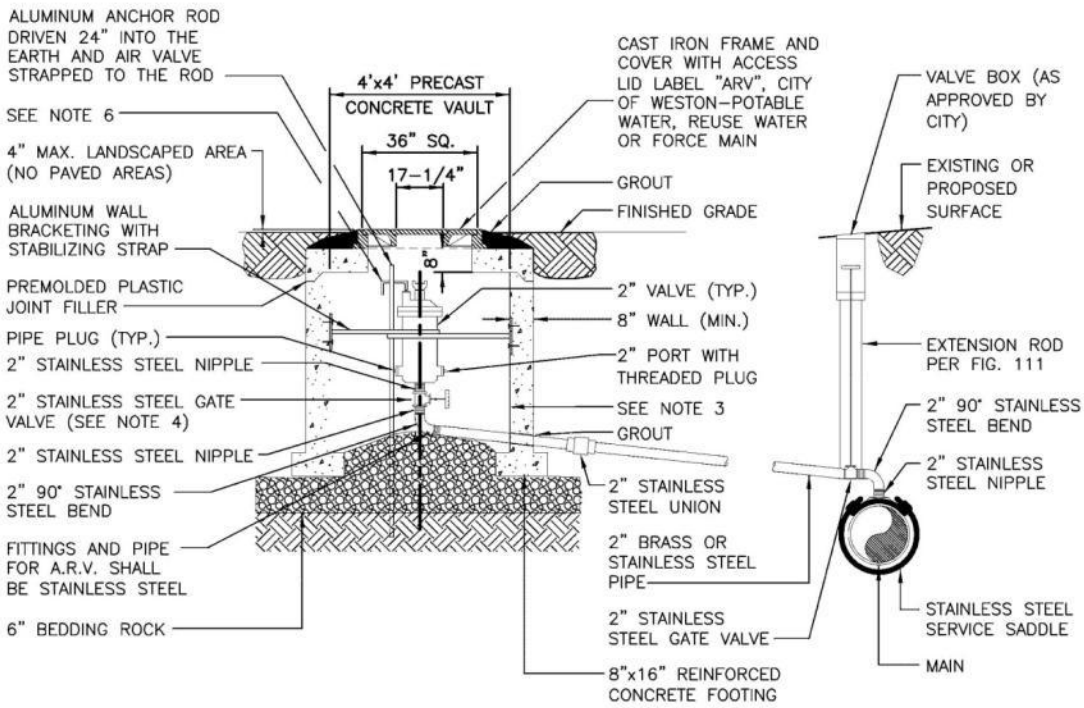

NOTES:

1. ABOVE DETAIL IS BASED ON 2" COMBINATION AIR/VACUUM RELEASE VALVE, CHANGE PIPE AND FITTINGS ACCORDINGLY FOR OTHER VALVE SIZES AND TYPES. VALVE SIZES TO BE DETERMINED BY THE ENGINEER AND APPROVED BY THE CITY PRIOR TO INSTALLATION.
2. THE MINIMUM DIMENSION FROM TOP OF PIPE TO FINISHED GRADE SHALL BE 4.0 FEET.
3. ARV VAULT WALLS TO BE COATED INSIDE AND OUTSIDE WITH 16 MIL. THICK APPROVED COATING.
4. VALVE SHALL BE SUPPORTED TO VAULT WALL.
5. LIFT HOLES ARE TO BE SEALED WITH MORTAR INSIDE AND OUTSIDE AFTER INSTALLATION. ALL OPENINGS SHALL BE SEALED WITH WATERPROOF, EXPANDING GROUT.
6. VALVES TO BE EQUIPPED WITH THREADED VENT PIPE THAT DIRECTS VENT DOWNWARD.

STANDARD ENGINEERING DETAILS & SPECIFICATIONS

OFFSET AIR RELEASE VALVE DETAIL

CITY OF WESTON, FLORIDA PUBLIC WORKS AND UTILITIES 2599 SOUTH POST ROAD, WESTON, FL 33327 TELEPHONE: 954-385-2600 FAX: 954-385-2610	DATE	SCALE	DRAWING NO.
	Feb. 2010	N.T.S.	S-15

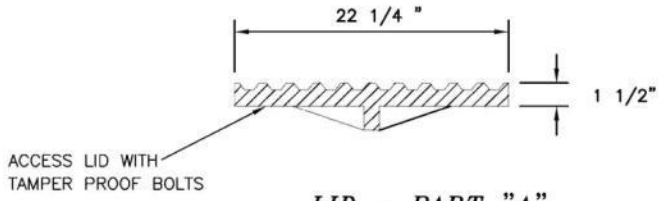

LID – PART "A"

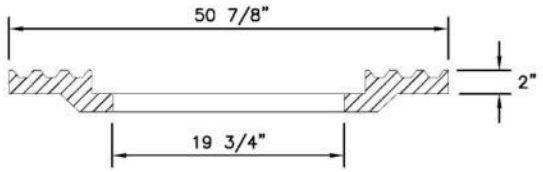

LID – PART "B"

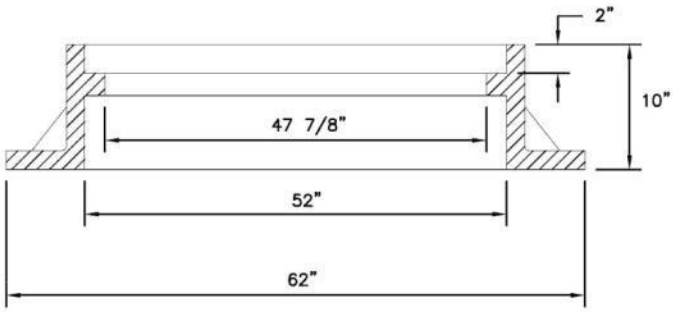

FRAME

NOTES:

1. ALL BEARING SURFACES TO BE MACHINED.
2. MINIMUM WEIGHT 1480 LBS.
3. U.S.F. 1341–AHM, TYPE C OR APPROVED EQUAL.
4. LID TO BE LABELED "ARV – CITY OF WESTON – POTABLE WATER"; "ARV – CITY OF WESTON – REUSE WATER"; OR "ARV – CITY OF WESTON – FORCE MAIN".

STANDARD ENGINEERING DETAILS & SPECIFICATIONS

AIR RELEASE VAULT ACCESS COVER

CITY OF WESTON, FLORIDA PUBLIC WORKS AND UTILITIES 2599 SOUTH POST ROAD, WESTON, FL 33327 TELEPHONE: 954–385–2600 FAX: 954–385–2610	DATE	SCALE	DRAWING NO.
	Feb. 2010	N.T.S.	S-16

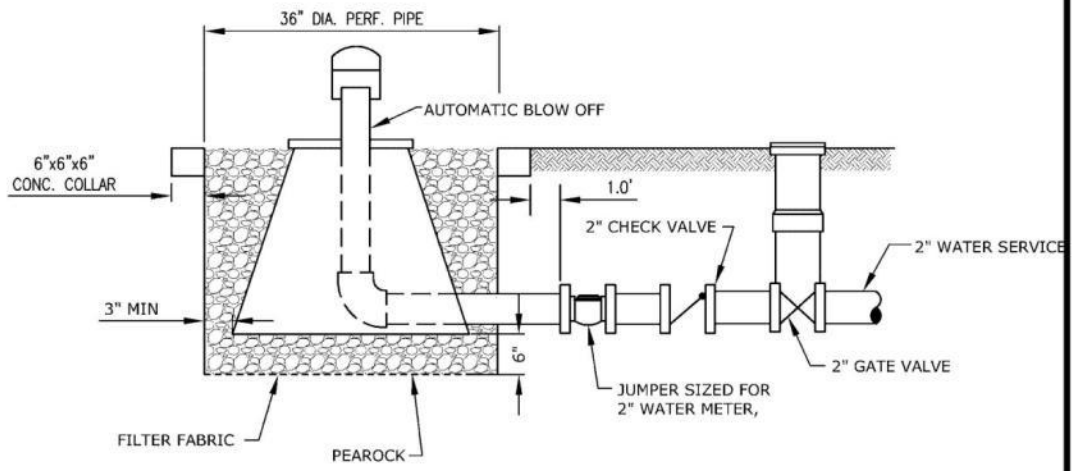

NOTES:

1. ABOVE DETAIL MUST BE APPROVED BY THE CITY PRIOR TO INSTALLATION.

	STANDARD ENGINEERING DETAILS & SPECIFICATIONS *AUTOMATIC BLOW OFF*			
	CITY OF WESTON, FLORIDA PUBLIC WORKS AND UTILITIES 2599 SOUTH POST ROAD, WESTON, FL 33327 TELEPHONE: 954-385-2600 FAX: 954-385-2610	DATE Feb. 2010	SCALE N.T.S.	DRAWING NO. S-17

§127.55 UTILITY CONFLICT DETAILS

Detail No.	Description
WS-1	Standard Utility Crossing
WS-2	Restrained Joint Requirements Combined Vertical Offset
WS-3	Restrained Joint Requirements Combined Horizontal Offset
WS-4	Flowable Fill Bedding between Crossing Pipes
WS-5	Filling and Flushing Connection

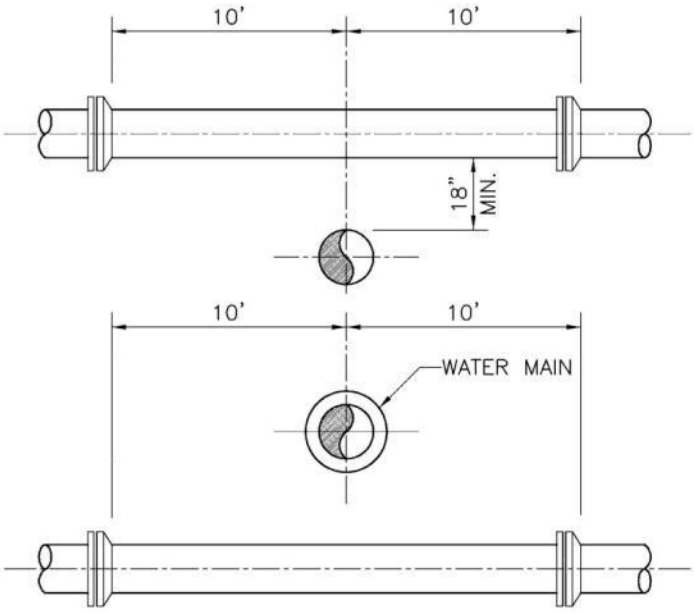

NOTES:

1. A WATER MAIN SHOULD CROSS OVER PIPES WHEREVER POSSIBLE MAINTAINING A 36 INCH COVER FOR P.V.C., 30 INCH COVER FOR D.I.P. AND 18 INCH SEPARATION AS MINIMUMS.
2. WHEREVER A WATER MAIN CROSSES UNDER A SEWER MAIN, OR CROSSES OVER WITH LESS THAN 18 INCHES VERTICAL SEPARATION, THEN D.I.P. SHALL BE USED FOR BOTH PIPES FOR A DISTANCE OF 20 FEET CENTERED ON CROSSING WITH NO JOINTS WITHIN 10 FEET OF THE CROSSING.
3. 18 INCH SEPARATION SHOULD BE MAINTAINED BETWEEN ALL PIPES (STORM, SEWER, WATER) WHENEVER POSSIBLE. 18 INCHES IS THE ABSOLUTE MINIMUM SEPARATION WITH D.I.P. ALLOWED FOR ANY SEPARATION LESS THAN 18 INCHES.
4. MAINTAIN 10 FEET HORIZONTAL SEPARATION BETWEEN WATER AND SEWER AS A MINIMUM.
5. 3 FOOT HORIZONTAL CLEARANCE SHALL BE PROVIDED BETWEEN WATER MAINS AND UTILITY OBSTRUCTIONS (CATCH BASINS, CONCRETE POLES, ETC.)

	STANDARD ENGINEERING DETAILS & SPECIFICATIONS *UTILITY CROSSING GENERAL REQUIREMENTS*			
	CITY OF WESTON, FLORIDA PUBLIC WORKS AND UTILITIES 2599 SOUTH POST ROAD, WESTON, FL 33327 TELEPHONE: 954-385-2600 FAX: 954-385-2610	DATE Feb. 2010	SCALE N.T.S.	DRAWING NO. *WS-1*

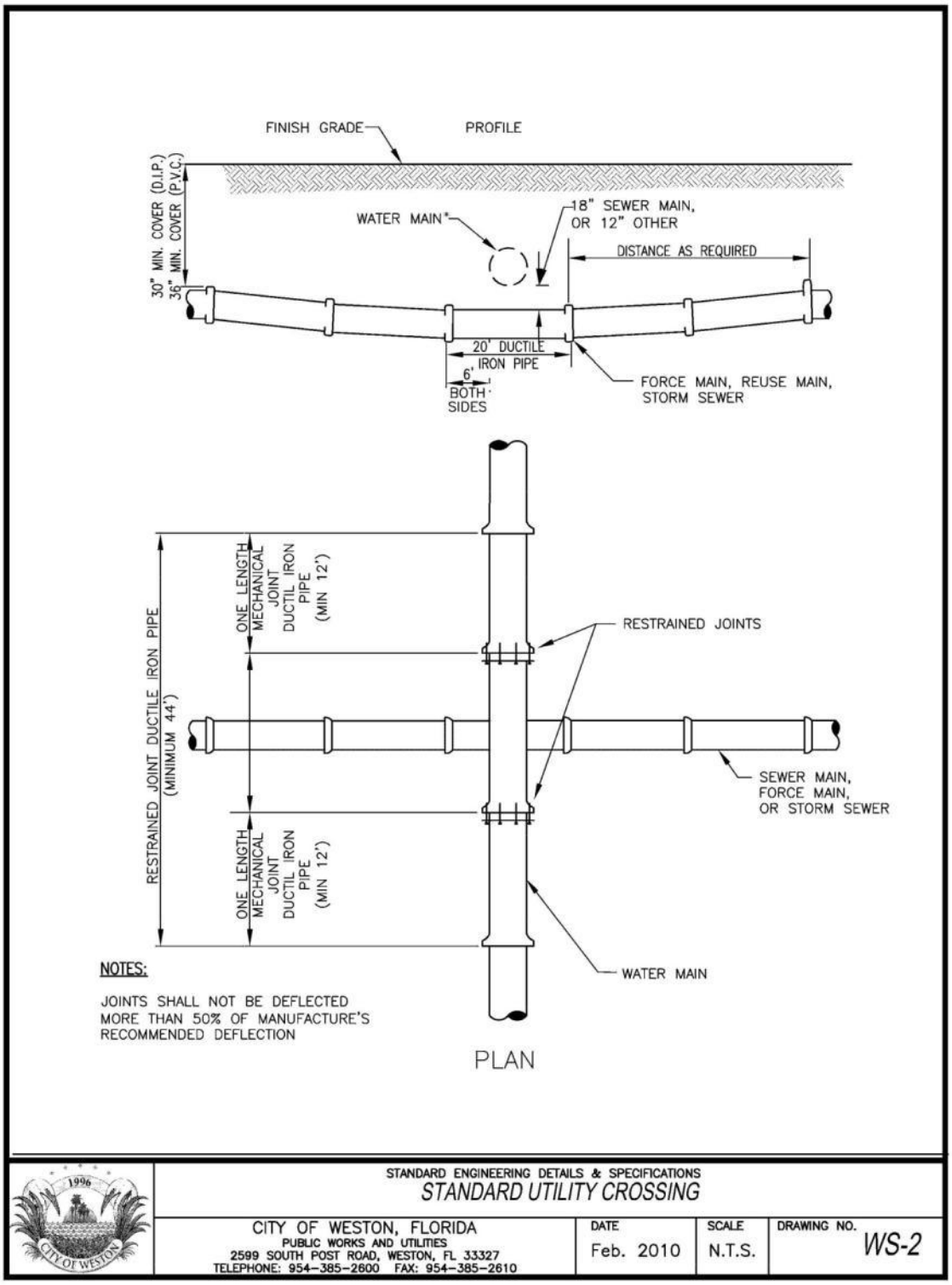
FINISH GRADE
PROFILE
30" MIN. COVER (D.I.P.)
36" MIN. COVER (P.V.C.)
WATER MAIN
18" SEWER MAIN, OR 12" OTHER
DISTANCE AS REQUIRED
20' DUCTILE IRON PIPE
6' BOTH SIDES
FORCE MAIN, REUSE MAIN, STORM SEWER
RESTRAINED JOINT DUCTILE IRON PIPE (MINIMUM 44')
ONE LENGTH MECHANICAL JOINT DUCTIL IRON PIPE (MIN 12')
RESTRAINED JOINTS
SEWER MAIN, FORCE MAIN, OR STORM SEWER
WATER MAIN
NOTES:
JOINTS SHALL NOT BE DEFLECTED MORE THAN 50% OF MANUFACTURE'S RECOMMENDED DEFLECTION
PLAN
STANDARD ENGINEERING DETAILS & SPECIFICATIONS
STANDARD UTILITY CROSSING
CITY OF WESTON, FLORIDA
PUBLIC WORKS AND UTILITIES
2599 SOUTH POST ROAD, WESTON, FL 33327
TELEPHONE: 954-385-2600 FAX: 954-385-2610
DATE
Feb. 2010
SCALE
N.T.S.
DRAWING NO.
WS-2

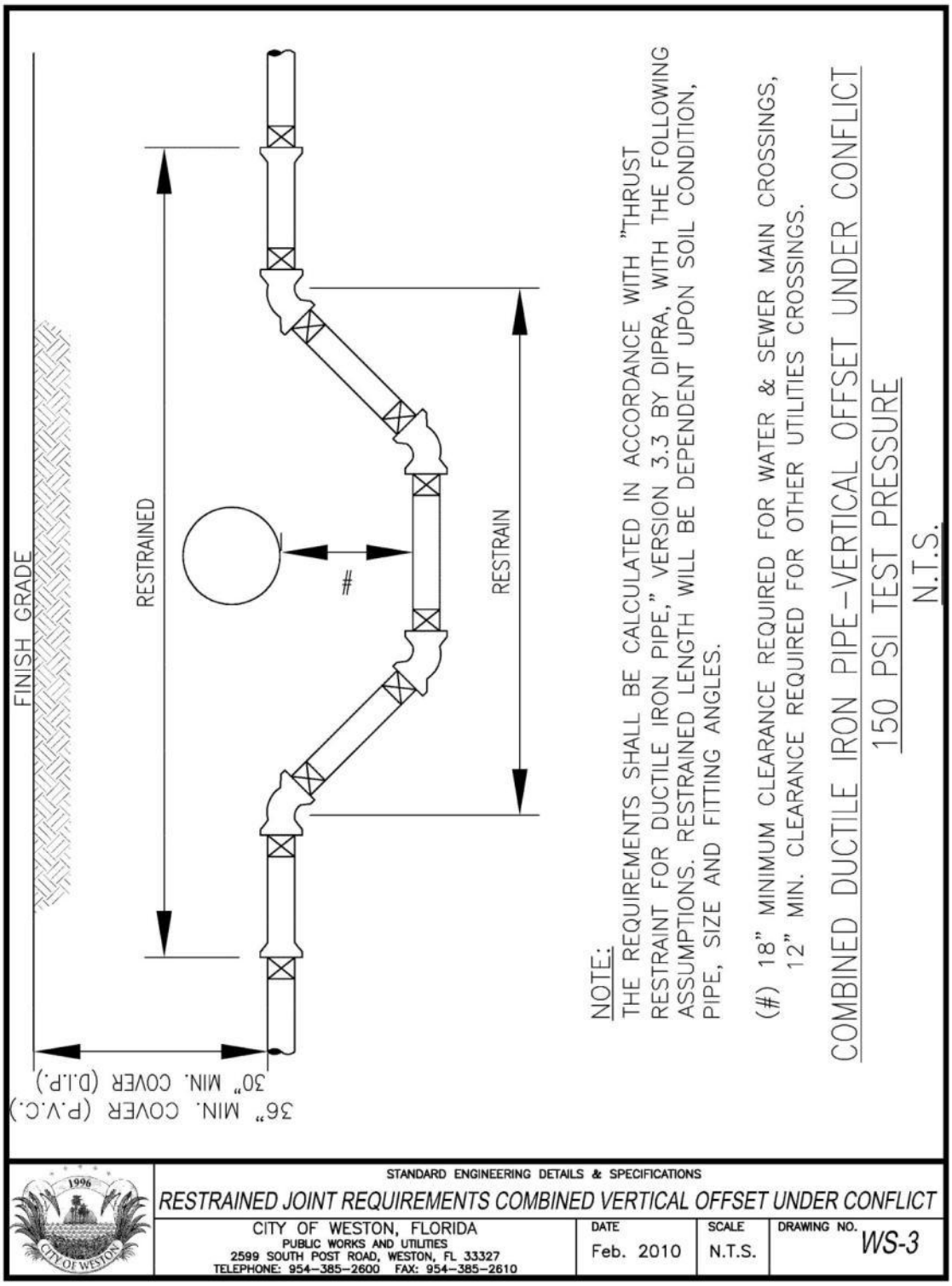
FINISH GRADE
RESTRAINED
#
RESTRAIN
36" MIN. COVER (P.V.C.)
30" MIN. COVER (D.I.P.)
NOTE:
THE REQUIREMENTS SHALL BE CALCULATED IN ACCORDANCE WITH "THRUST RESTRAINT FOR DUCTILE IRON PIPE," VERSION 3.3 BY DIPRA, WITH THE FOLLOWING ASSUMPTIONS. RESTRAINED LENGTH WILL BE DEPENDENT UPON SOIL CONDITION, PIPE, SIZE AND FITTING ANGLES.
(#) 18" MINIMUM CLEARANCE REQUIRED FOR WATER & SEWER MAIN CROSSINGS, 12" MIN. CLEARANCE REQUIRED FOR OTHER UTILITIES CROSSINGS.
COMBINED DUCTILE IRON PIPE-VERTICAL OFFSET UNDER CONFLICT
150 PSI TEST PRESSURE
N.T.S.
STANDARD ENGINEERING DETAILS & SPECIFICATIONS
RESTRAINED JOINT REQUIREMENTS COMBINED VERTICAL OFFSET UNDER CONFLICT
CITY OF WESTON, FLORIDA
PUBLIC WORKS AND UTILITIES
2599 SOUTH POST ROAD, WESTON, FL 33327
TELEPHONE: 954-385-2600 FAX: 954-385-2610
DATE
Feb. 2010
SCALE
N.T.S.
DRAWING NO.
WS-3

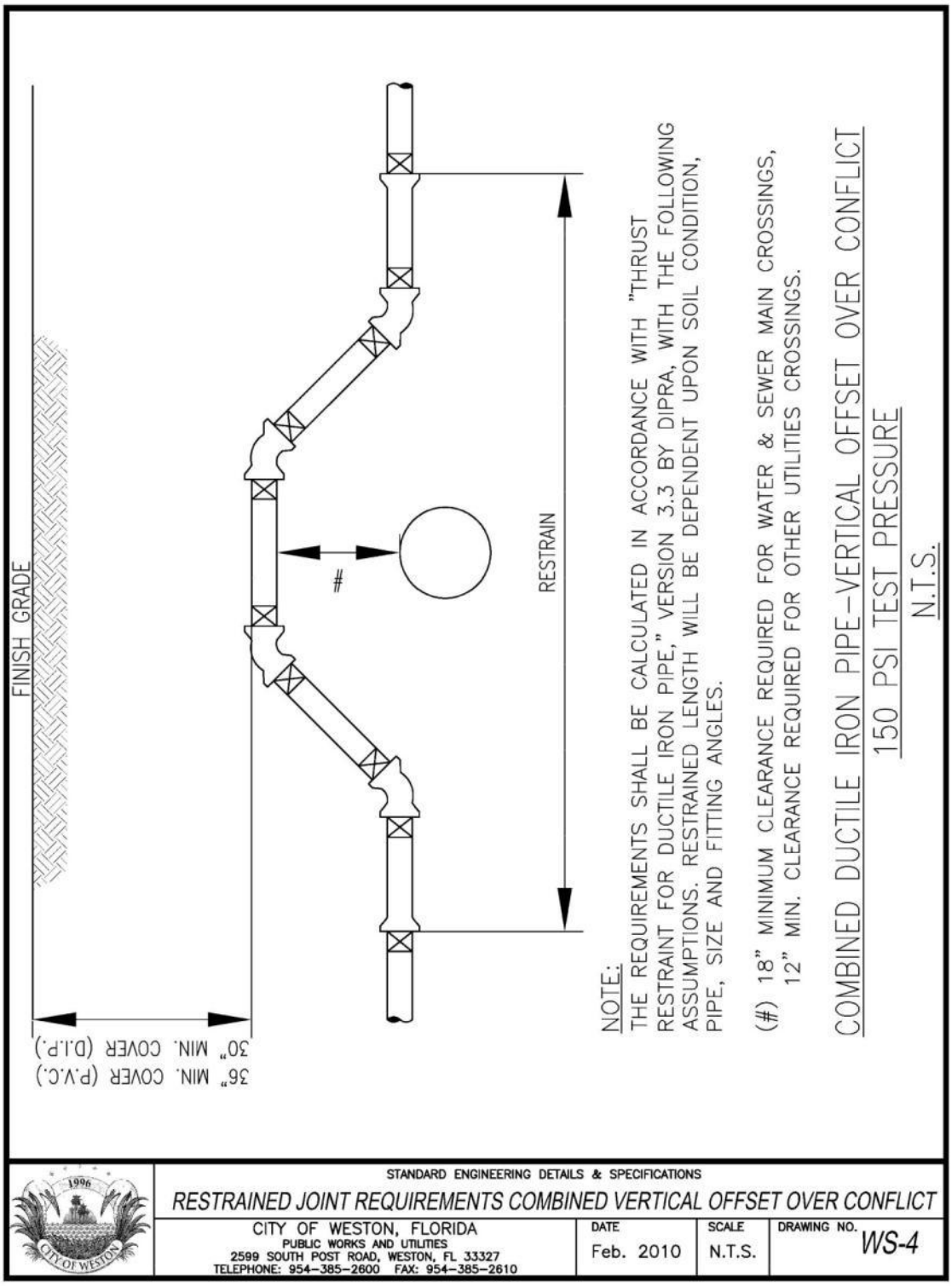
FINISH GRADE
36" MIN. COVER (P.V.C.)
30" MIN. COVER (D.I.P.)
#
RESTRAIN
NOTE:
THE REQUIREMENTS SHALL BE CALCULATED IN ACCORDANCE WITH "THRUST RESTRAINT FOR DUCTILE IRON PIPE," VERSION 3.3 BY DIPRA, WITH THE FOLLOWING ASSUMPTIONS. RESTRAINED LENGTH WILL BE DEPENDENT UPON SOIL CONDITION, PIPE, SIZE AND FITTING ANGLES.
(#) 18" MINIMUM CLEARANCE REQUIRED FOR WATER & SEWER MAIN CROSSINGS,
12" MIN. CLEARANCE REQUIRED FOR OTHER UTILITIES CROSSINGS.
COMBINED DUCTILE IRON PIPE-VERTICAL OFFSET OVER CONFLICT
150 PSI TEST PRESSURE
N.T.S.
STANDARD ENGINEERING DETAILS & SPECIFICATIONS
RESTRAINED JOINT REQUIREMENTS COMBINED VERTICAL OFFSET OVER CONFLICT
CITY OF WESTON, FLORIDA
PUBLIC WORKS AND UTILITIES
2599 SOUTH POST ROAD, WESTON, FL 33327
TELEPHONE: 954-385-2600 FAX: 954-385-2610
DATE
Feb. 2010
SCALE
N.T.S.
DRAWING NO.
WS-4

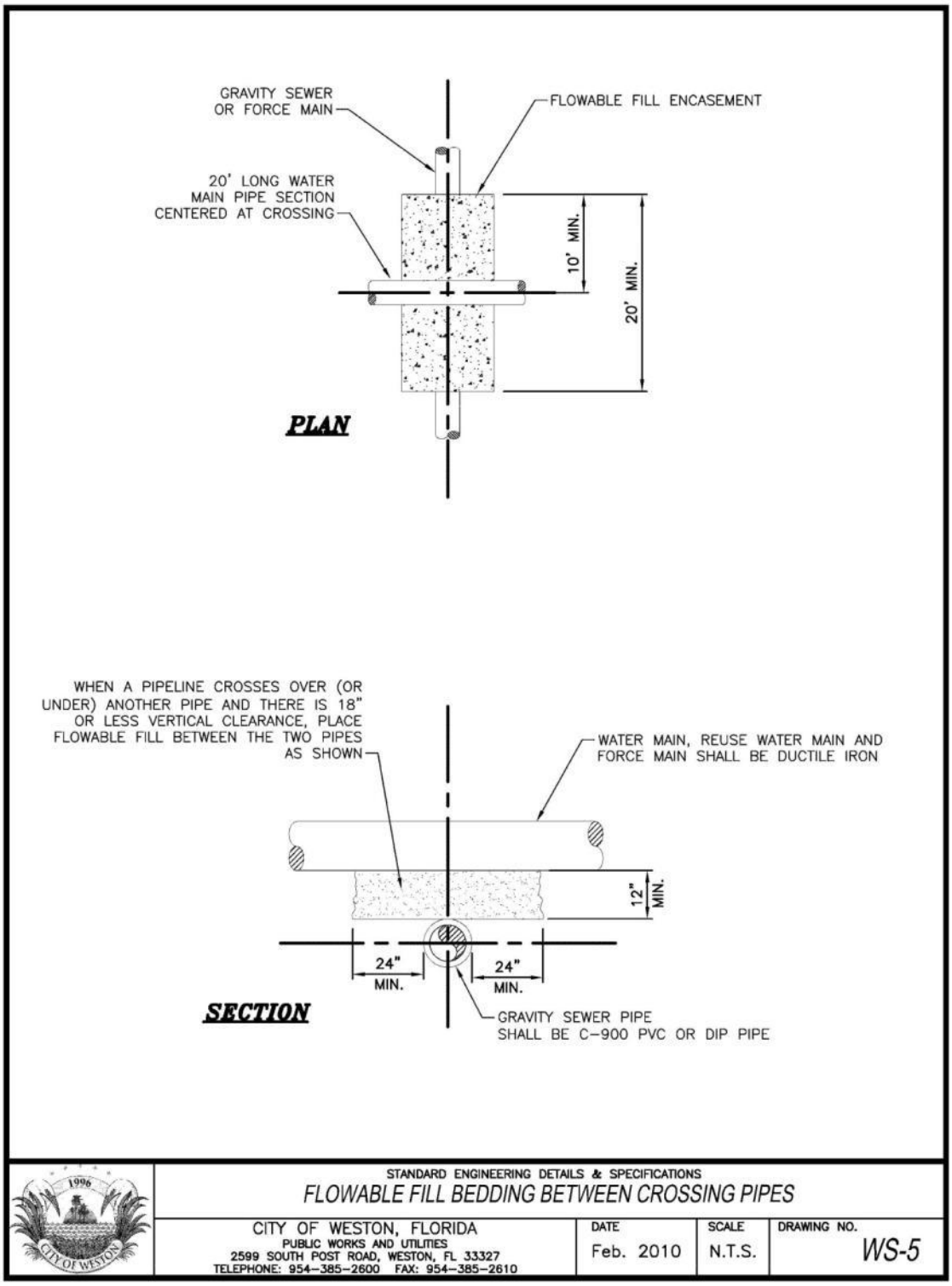
GRAVITY SEWER OR FORCE MAIN
FLOWABLE FILL ENCASEMENT
20' LONG WATER MAIN PIPE SECTION CENTERED AT CROSSING
10' MIN.
20' MIN.
PLAN
WHEN A PIPELINE CROSSES OVER (OR UNDER) ANOTHER PIPE AND THERE IS 18" OR LESS VERTICAL CLEARANCE, PLACE FLOWABLE FILL BETWEEN THE TWO PIPES AS SHOWN
WATER MAIN, REUSE WATER MAIN AND FORCE MAIN SHALL BE DUCTILE IRON
12" MIN.
24" MIN.
24" MIN.
SECTION
GRAVITY SEWER PIPE SHALL BE C-900 PVC OR DIP PIPE
STANDARD ENGINEERING DETAILS & SPECIFICATIONS
FLOWABLE FILL BEDDING BETWEEN CROSSING PIPES
CITY OF WESTON, FLORIDA
PUBLIC WORKS AND UTILITIES
2599 SOUTH POST ROAD, WESTON, FL 33327
TELEPHONE: 954-385-2600 FAX: 954-385-2610
DATE
Feb. 2010
SCALE
N.T.S.
DRAWING NO.
WS-5

CHAPTER 128. BUILDING CODES-ADOPTED.

§ 128.01 BUILDING CODE ADOPTED.

The Building Code is adopted as the regulations governing the Construction of all new Buildings and Structures, and all alterations, additions and repairs in any new or existing Building or Structure in the City.

§ 128.02 PERMITS AND RELATED FEES.

City permit and related fees shall be established and amended by resolution of the City Commission.

CHAPTER 129. MINIMUM HOUSING.

§ 129.01 SCOPE AND APPLICATION.

129.01 (A) This Chapter applies to:

129.01 (A)(1) Every Structure or Building located within the City that is a Dwelling and is used as a Dwelling or has become unoccupied; and

129.01 (A)(2) Buildings or Structures other than residential or Dwelling Units to the extent provided herein.

129.01 (B) This Chapter establishes minimum standards for the occupancy of Dwellings and Dwelling Units. It does not replace or modify standards established by other codes or ordinances for the Construction, replacement or repair of Buildings.

129.01 (C) This Chapter is not intended to regulate in the field governed by Florida Statutes, Chapter 553, or the Building Code.

§ 129.02 CONSTRUCTION BY COURT.

When applicable and whenever possible, a court shall not construe the Minimum Housing Chapter to conflict with Florida Statutes, Chapter 553, or the Building Code.

§ 129.03 SEPARATE AND DISTINCT OFFENSES.

129.03 (A) ***Continuing violations.*** Each day a violation continues or is committed shall be considered a separate and distinct offense.

129.03 (B) ***Multiple occupant citing.*** An Owner, occupant, lessor or lessee may be cited separately for each occupant of a Dwelling living in conditions that violate the Minimum Housing Chapter.

§ 129.04 COMPLIANCE WITH MINIMUM STANDARDS.

129.04 (A) No Owner, agent or operator shall occupy, allow another to occupy or let to another for occupancy a Dwelling Unit that does not comply with the minimum standards set forth in §§129.05 through 129.13.

129.04 (B) Every lessee of a Dwelling Unit shall comply with the minimum standards set forth in §129.13(A).

§ 129.05 MINIMUM STANDARDS FOR SPACE.

129.05 (A) Each Dwelling and Dwelling Unit shall have a minimum Gross Floor Area of not less than 150 square feet for each occupant.

129.05 (B)(1) Every Habitable Room in a Dwelling or Dwelling Unit occupied for sleeping purposes shall have, at a minimum:

129.05 (B)(1)(a) Gross Floor Area of not less than 70 square feet and, when occupied by more than one occupant, it shall have a Gross Floor Area of not less than 50 square feet for each occupant; and

129.05 (B)(1)(b) A width of eight feet.

129.05 (B)(2) In determining occupancy of a room used for sleeping purposes, children ten years old and younger shall be counted as one-half an occupant.

129.05 (C) Every Habitable Room in a Dwelling or Dwelling Unit shall have a ceiling height of not less than seven feet for at least 50% of the floor area of the room. Any portion of a Habitable Room having a ceiling height of five feet or less shall not be included in computing the Gross Floor Area of the room.

129.05 (D) Every Dwelling Unit shall have a minimum of 24 square feet of total shelving in wall or base cabinets for storage of cooking utensils. Usable storage shelving in a cooking range or under a sink may be included as meeting this requirement. All cabinet doors shall be properly maintained in good condition.

129.05 (E) Every Dwelling or Dwelling Unit shall have a minimum of 12 square feet of floor area of closet space for the first bedroom and six square feet of floor area of closet space for each additional bedroom. Kitchen cabinet or pantry space shall not be considered as space meeting this requirement. All closets shall have a shelf, a rod and a minimum height of six feet.

129.05 (F) In calculating the Gross Floor Area of a room to determine compliance with this section, no space occupied by an accumulation of stored materials, including but not limited to papers, magazines, books, clothing, boxes, laundry and supplies, shall be counted as a part of the Gross Floor Area.

§ 129.06 MINIMUM STANDARDS FOR LIGHT.

129.06 (A) Every Habitable Room, except interior rooms, shall have at least one window with a minimum total area of not less than 10% of the floor area of the room or a skylight with a minimum total area of not less than 15% of the floor area of the room.

129.06 (A)(1) Windows and skylights shall face directly to the outdoors.

129.06 (A)(2) A window shall be deemed not to face directly to the outdoors, and shall not be included in the required minimum total window area, if exterior walls of adjacent Buildings or other light-obstructing Structures are located less than three feet from the window and extend to a level above the ceiling of the room in which the window occurs.

129.06 (B) Every Habitable Room shall contain:

129.06 (B)(1) At least two separate, properly installed and operational floor or wall-type electric outlets; or

129.06 (B)(2) One properly installed and operational floor or wall-type electric outlet and one properly installed and operational ceiling-type electric light fixture.

129.06 (C) Every bathroom, shower room or water closet compartment shall contain at least one properly installed and operational ceiling or wall-type electric light fixture.

129.06 (D) Every hall, stairway and other space or area located within or on the exterior of a Dwelling or Dwelling Unit shall have operational electric lighting facilities:

129.06 (D)(1) Capable of providing not less than one foot-candle of light throughout the hall, stairway, other space or area; and

129.06 (D)(2) The availability of light from those facilities shall be controlled by the occupants at all times.

§ 129.07 MINIMUM STANDARDS FOR VENTILATION.

129.07 (A) Every Habitable Room, bathroom, shower room or water closet compartment shall be ventilated directly to the outdoors. Such ventilation shall be provided by a window or skylight area capable of being opened to provide ventilation, or by functioning mechanical ventilation that complies with the Building Code and other regulatory codes of the State of Florida, Broward County and the City.

129.07 (B) Every window or other device capable of providing ventilation to the outdoors shall be properly fitted with a screen adequate for protection against mosquitoes, flies and other insects.

129.07 (C) For every Dwelling or Dwelling Unit without functioning air conditioning, each door opening directly to outdoor spaces shall be equipped with a self-closing screen door capable of providing protection against mosquitoes, flies and other insects.

§ 129.08 MINIMUM STANDARD FOR PROTECTION AGAINST THE ELEMENTS.

Every Dwelling or Dwelling Unit, including windows, doors and Roofs, shall be capable of withstanding penetration by wind, rain, other water, heat, cold, and smoke or other airborne contaminants.

§ 129.09 MINIMUM SANITARY STANDARDS.

129.09 (A) ***Dwelling Units.*** Each Dwelling or Dwelling Unit, shall have the following:

129.09 (A)(1) A minimum of one flush water closet, lavatory basin and a bathtub or shower;

129.09 (A)(2) An approved source of Potable Water;

129.09 (A)(3) An approved type of kitchen sink; and

129.09 (A)(4) Adequate receptacles for the storage of Household Waste.

129.09 (B) Each kitchen sink, lavatory basin, bathtub and shower shall be supplied with hot and cold water. The water heating facility shall be adequate to supply 20 gallons of not less than 120 degrees Fahrenheit water per day for each occupant.

129.09 (B)(1) Water heating facilities shall be properly installed, connected and maintained in a Good State Of Repair.

129.09 (B)(2) No electric water heater shall be allowed in any bathroom unless the water heater and all electrical connections are totally encased in a nonconductive material or the water heater is installed in such a manner as to avoid any probability of shock hazard.

129.09 (C) All Plumbing fixtures shall be properly connected to approved water, Sewer or gas systems. Where a Sewer System is not available, drain lines shall be connected to an approved septic tank.

129.09 (D) Every Plumbing fixture, water pipe, waste pipe, gas line and drain line shall be maintained in good, sanitary working condition.

129.09 (E) Every supplied facility and piece of equipment to be utilized by a Tenant or occupant, including tenant-owned equipment, shall be maintained in a safe, sanitary and properly operating condition.

129.09 (F) Floor surfaces in bathrooms, shower rooms and kitchens shall be covered with asphalt, vinyl-plastic, rubber tile, ceramic tile, terrazzo or linoleum or other durable, waterproof, nonabsorbent material, and such floors shall be properly maintained in a clean and sanitary condition. No finished flooring material that requires "face nailing" shall be used.

129.09 (G) Every occupied Dwelling or Dwelling Unit shall have a properly installed cooking facility consisting of a stove having a minimum of two top burners, and all necessary Utility connections shall be provided in each Dwelling or Dwelling Unit for said cooking facility.

129.09 (H) Every occupied Dwelling or Dwelling Unit shall be kept free of human or Animal Waste.

§ 129.10 MINIMUM STANDARDS FOR HEATING FACILITIES.

129.10 (A) Every Dwelling or Dwelling Unit occupied, let or intended to be let for occupancy shall have adequate space-heating facilities. A space-heating facility shall be adequate only if it contains permanent space-heating equipment capable of:

129.10 (A)(1) Heating two-thirds of all Habitable Rooms to a minimum air temperature of 68 degrees Fahrenheit to be measured three feet above the floor when the outside temperature is 45 degrees Fahrenheit; or

129.10 (A)(2) A Capacity of five BTU'S per hour of input per cubic foot of Habitable Room space within two-thirds of the Habitable Room. The five BTU'S per hour input standard is based on a heating unit with 70% rating of input to output efficiency; an appropriate correction factor will be applied when the proposed heating unit exceeds an input to output efficiency rating of 70%. Heating units supplied on the basis of this calculation shall otherwise comply with the standards set forth in this Chapter.

129.10 (B) Every heating facility or device, whether permanent, portable or temporary, must comply and be maintained in accordance with the Building Code and other regulatory codes of the State of Florida, Broward County and the City. Oil heaters, gas heaters, and wood stoves must be connected to a properly installed vent, said vent conforming to the provisions of the Building Code.

129.10 (C) Any portable heating device approved by the Underwriter's Laboratories, Inc., or a properly installed fireplace may be used as an accessory heating unit.

129.10 (D) Accessory heating units shall be deemed to be supplementary to a permanent heating facility and shall not be considered when calculating the adequacy of the permanently installed heating equipment.

129.10 (E) Only approved accessory heating units shall be used in any Dwelling or Dwelling Unit.

129.10 (F) The use of unsafe heating or cooking stoves and the use of cooking stoves, including ovens, for heating purposes is prohibited.

§ 129.11 ADDITIONAL MINIMUM STANDARDS.

129.11 (A) Gutters and downspouts affixed to any Dwelling or present on any property adjacent to a Dwelling, where in existence, shall be maintained in a Good State Of Repair.

129.11 (B) Inside and outside stairways, porches, balconies, hallways, corridors and all appurtenances thereto shall be maintained in a safe condition and capable of supporting the loads set forth in the Building Code and other regulatory codes of the State of Florida, Broward County and the City. No stair riser shall exceed eight inches and no stair tread shall be less than nine inches. Protective railings or handrails shall be required on any unenclosed Structure over three feet from the ground level and on every interior or exterior stair or stairwell of more than four risers, and shall be located in accordance with the requirements of the Building Code.

129.11 (C) All deteriorating parts and areas shall be properly maintained and suitably protected from the elements.

129.11 (D) Chimneys, smoke pipes, flues and ventilating pipes and ducts shall be maintained in a safe, properly operating condition.

129.11 (E) Every Plumbing fixture, water pipe, drain, waste pipe, and gas pipe shall be maintained in a Good State Of Repair, free from defects, leaks and obstructions.

129.11 (F) All electrical wiring and accessories shall be maintained in a Good State Of Repair.

129.11 (G) All accessory Structures included shall be kept clean and maintained in reasonably good repair, free from pest infestations.

129.11 (H) Exterior Premises shall be kept free from excessive growth of weeds, grass and other flora. The term "excessive" shall be interpreted as a condition, the existence of which could be detrimental to the health, safety and welfare of the occupants of the Premises or to the public.

129.11 (I) Each Dwelling or Dwelling Unit shall provide privacy for and accessibility to toilet and bath facilities as follows:

129.11 (I)(1) All water closets, urinals, bathtubs and showers shall be located in a room or rooms that afford privacy to the user;

129.11 (I)(2) Rooms containing water closets, urinals, bathtubs or showers shall be not more than one Story removed from the Dwelling Unit of any occupant sharing the facilities; and

129.11 (I)(3) Toilet and bath facilities shall be accessible without going outside of the Building or without going through a Dwelling Unit of another occupant.

§ 129.12 REPAIRS AND INSTALLATIONS.

Repairs and installations shall be made so as to comply with all provisions of the Building Code and other regulatory codes of the State of Florida, Broward County and the City.

§ 129.13 MINIMUM STANDARDS APPLICABLE TO LESSEES AND LESSORS.

129.13 (A) Unless otherwise agreed in writing between a lessee and lessor of a Dwelling or Dwelling Unit, a lessee shall:

129.13 (A)(1) Keep in a clean and sanitary condition that part of the Dwelling or Dwelling Unit he or she occupies or controls, including all equipment, sanitary facilities, yards, courts, driveways, Lawns and Shrubbery;

129.13 (A)(2) Dispose of Rubbish, Garbage, Lawn and Shrubbery cuttings, leaves and other waste materials as provided by Law or ordinance. All Garbage shall be placed in proper disposal facilities or storage Containers as required in this Chapter;

129.13 (A)(3) Exterminate and control rodents, vermin and other pests within the Dwelling or Dwelling Unit he or she occupies or controls;

129.13 (A)(4) Not allow Animals or pets to be kept in any Dwelling or Dwelling Unit or on any Premises in such a manner so as to create an unsanitary condition or a nuisance; and

129.13 (A)(5) Maintain in a safe, sanitary and proper operating condition, each facility or piece of equipment owned and utilized by the lessee.

129.13 (B) The lessor of a Dwelling, and if applicable, the lessor's agent or operator, shall, jointly and severally:

129.13 (B)(1) Maintain the common, shared or public areas of Dwellings in a clean and sanitary condition. Common, shared or public areas shall include yards, courts, driveways, Lawns and Shrubbery;

129.13 (B)(2) Maintain the exterior Premises so as to prevent the accumulation of stagnant water thereon; and

129.13 (B)(3) Control and exterminate rodents, vermin and other pests in all public or shared areas, and in adjacent areas when infestation of said areas is caused by the failure of the Owner, his or her agent or operator to control and exterminate said rodents, vermin and other pests.

§ 129.14 MINIMUM STANDARDS APPLICABLE TO PUBLIC LODGING ESTABLISHMENTS.

Public lodging establishments, including, but not limited to, Hotels, Motels, resort condominiums, and roominghouses, shall comply with the regulations set forth in Chapter 509, Florida Statutes.

§ 129.15 REQUIREMENTS FOR PREMISES ADJACENT TO DWELLING STRUCTURES.

The Owner of property adjacent to a Dwelling shall keep such property free from excessive growth of weeds, grass, and other flora, and Rubbish, Trash, Garbage and Refuse.

§ 129.16 ENFORCEMENT.

The Minimum Housing Chapter shall be enforced by a Building Code Officer as provided in Chapter 31 of the Code.

CHAPTER 130. UNSAFE STRUCTURES.

§ 130.01 PURPOSE.

The Unsafe Structures Chapter is established to provide standards and requirements for maintenance, repair, closure, disposition and demolition of Structures or Premises that have, through wear, neglect or use, become unsafe, unstable or a nuisance to occupants of the Structures or the public at large. The Unsafe Structures Chapter is also intended to provide standards for the closure, disposal and demolition of Structures or Premises that have become unoccupied for a significant period of time. The Unsafe Structures Chapter is not intended to regulate the field governed by Florida Statutes, Chapter 553, or the Building Code.

§ 130.02 FINDINGS OF FACT.

The City Commission finds that:

130.02 (A) The Unsafe Structures Chapter is a critical means of protecting the health, safety and welfare of the public by remedying or eliminating the dangers posed by Structures that have become unoccupied, unsafe, unstable or a public nuisance;

130.02 (B) Diligent and strict enforcement of the Unsafe Structures Chapter is critical to preventing:

130.02 (B)(1) The dangers posed by the collapse of unsafe or unstable Structures;

130.02 (B)(2) Fires, the risk of which is heightened in unsafe Structures or unoccupied Buildings;

130.02 (B)(3) The spread of disease, including but not limited to tetanus, malaria and West Nile virus;

130.02 (B)(4) The use of unsafe Structures or unoccupied Buildings for criminal endeavors, including but not limited to assault, battery, sexual assault, sexual battery, arson, and drug use; and

130.02 (B)(5) A decline in property values in areas adjacent to a Structure that is unoccupied, unsafe, unstable or a public nuisance.

§ 130.03 SCOPE AND APPLICATION.

The Unsafe Structures Chapter applies to Structures that have, through wear, neglect or misuse, become unsafe, unstable or a nuisance to occupants of the Structures or the public at large. The Unsafe Structures Chapter may apply to unoccupied Buildings.

§ 130.04 CONSTRUCTION BY COURT.

When applicable and whenever possible, a court shall not construe the Unsafe Structures Chapter to conflict with Florida Statutes, Chapter 553, or the Building Code.

§ 130.05 UNOCCUPIED BUILDINGS.

Unoccupied Buildings are Buildings that have not been occupied or used for a period of 60 days. Owners of unoccupied Buildings shall seal off, secure and maintain as secured all entrances and openings to the Building.

§ 130.06 UNSAFE STRUCTURES.

130.06 (A) Owners shall prevent Structures from becoming unsafe.

130.06 (B) Owners shall correct physical conditions that render Structures unsafe as provided by the Building Code and the City Code.

130.06 (C) A Structure shall be deemed unsafe if:

130.06 (C)(1) There is substantial accumulation of Debris or other combustible materials therein;

130.06 (C)(2) The physical condition of the Structure creates a hazard with respect to a means of ingress or egress for the purpose of providing fire protection to the Building or Structure;

130.06 (C)(3) There is a falling away, hanging loose or loosening of the sheet rock, drywall, siding, block, brick, Roof tiles or other Building materials;

130.06 (C)(4) There is deterioration or damage to any of the Structure's load-bearing or Roof members;

130.06 (C)(5) The Structure, or any part thereof, is partially destroyed;

130.06 (C)(6) There is water damage to the interior of the Structure that affects the structural integrity of the Structure or creates an unsanitary or hazardous condition;

130.06 (C)(7) There is sagging or leaning out of plumb of any part of the Structure;

130.06 (C)(8) The electrical or mechanical systems have deteriorated or been damaged to the point of creating a hazardous condition;

130.06 (C)(9) The Plumbing or sanitary systems have deteriorated or been damaged to the point of creating an unsanitary or hazardous condition;

130.06 (C)(10) The Structure has been contaminated or infected with toxic mold or any other biological contaminant; or

130.06 (C)(11) There is no approved Potable Water supply for the required Plumbing fixtures.

130.06 (D) The Building Official may otherwise declare a Structure to be unsafe if wear, neglect or misuse has caused a condition that weakens the structural integrity of the Structure.

§ 130.07 SEPARATE AND DISTINCT OFFENSES.

130.07 (A) ***Continuing violations.*** Each day a condition continues after the initial citation for the condition shall be considered a separate and distinct citable offense.

130.07 (B) ***Multiple citations.*** An Owner may be cited separately for each condition which renders the Owner's Structure unsafe.

130.08 ENFORCEMENT.

The Unsafe Structures Chapter shall be enforced by the Building Official.

CHAPTER 131. FACILITIES IN RIGHTS-OF-WAY.

§ 131.01 INTENT AND PURPOSE.

The City Commission finds and declares that:

131.01 (A) The City has acquired, built and maintained Rights-Of-Way to promote the general health, safety and well-being of its citizens;

131.01 (B) Utilities locate their facilities in the Rights-Of-Way to ensure that all citizens receive adequate Utility service;

131.01 (C) Frequent Construction in the Rights-Of-Way by Utilities and other users contributes to early deterioration and degradation of the Rights-Of-Way;

131.01 (D) In response to the foregoing, and to protect and limit deterioration of the Rights-Of-Way, the City hereby adopts uniform regulations for the Construction of facilities in the Rights-Of-Way;

131.01 (E) The regulations embodied herein have been made as broad as possible to serve as standards of quality to maintain the necessary uniformity in the utilization of Rights-Of-Way;

131.01 (F) Some Right-Of-Way users are under Franchises with the City, others are not. It is the intent of this Chapter that it apply to all users of the Rights-Of-Way including those under a City Franchise and those for whom no Franchise is required, but excluding providers of Communications Services and Personal Wireless Services as defined in Chapter 1 of this Code.

§ 131.02 CITY TO ADMINISTER.

The City Manager shall be responsible for the administration of this Chapter.

§ 131.03 AUTHORITY TO USE RIGHTS-OF-WAY.

131.03 (A) ***Franchise requirement***. Each Person who occupies, uses, or seeks to occupy or use, the Rights-Of-Way or has any facilities located in the Rights-Of-Way, or seeks to have facilities located in any Rights-Of-Way, shall be required to obtain a Franchise from the City unless otherwise required by Law. This requirement shall apply to the Owner of such facilities and not a contractor or agent of the Owner.

131.03 (B) ***Permit requirement***. No Person may construct, install, repair, remove, relocate, or perform any other work on, or use any facilities or any part thereof located in any Rights-Of-Way without first being granted a permit by the City. Nothing herein shall be construed to require additional information by an agent or contractor of a permittee where the permittee has already complied with this Section. Nothing herein shall be construed to repeal or amend any provision of any Law, this Code, or City policy permitting Persons to plant or maintain Medians or Swales in the area of Rights-Of-Way between their property and the Street curb. Persons planting or maintaining Medians or Swales shall not be deemed to use or occupy the Rights-Of-Way, and

shall not be required to obtain any permits or satisfy any other requirements for planting or maintaining such Medians or Swales under this Chapter so long as they are in full compliance with any other applicable provision of Law.

131.03 (C) ***Coordination with City***. Each Person shall coordinate with the City, to the extent feasible and practical, its Construction of facilities, in order to reduce the frequency of Construction, Excavation and obstructions in the Rights-Of-Way.

131.03 (D) ***Diagrams***. Each Person shall, to the extent feasible, provide to the City accurate record diagrams indicating the horizontal and approximate vertical location, relative to the boundaries of the Rights-Of-Way, of all facilities which it owns or over which it has control and which are located in any Rights-Of-Way. This information shall be provided with the specificity and in the CAD format required by the City or, if different, the CAD format used by the Person, provided that the City can import such diagrams into its format for inclusion in the mapping system used by the City. Record drawings shall be certified by a professional Engineer or land surveyor registered by the State of Florida, except for such engineers or surveyors who may be exempt from registration by Florida Statutes. For facilities installed prior to October 16, 2000, the City shall accept record diagrams in a non-CAD format, and the Person shall not be required to prepare new diagrams of existing facilities.

131.03 (E) ***Non-permitted facilities***. If any non-permitted facilities are found in the Rights-Of-Way and no Person claims ownership within 45 calendar days after written notification by the City of the location of such facilities, such facilities shall be deemed Abandoned and the City may exercise any remedies or rights it has at Law or in equity, including but not limited to taking possession of such facilities.

131.03 (F) ***Discontinuance and Abandonment***. A permittee who has determined to discontinue all operations in the City must notify the City of the assumption by another Person of ownership of such facilities, obtain permission from the City to Abandon such facilities in place or provide the City with an acceptable plan for disposition of such facilities. If a permittee fails to comply with this subsection, such facilities shall be deemed Abandoned and the City may exercise any remedies or rights it has at Law or in equity, including but not limited to taking possession of the facilities.

§ 131.04 PERMITS TO WORK IN RIGHTS-OF-WAY.

131.04 (A) ***Permit requirement.*** Except as otherwise provided in the Code, no Person may construct in any Rights-Of-Way without first having obtained a permit from the City.

131.04 (B) A permit will allow the holder to construct in that part of the Rights-Of-Way described in such permit and to hinder free and open passage over the specified portion of the Rights-Of-Way by placing facilities described therein, subject to applicable permit terms.

131.04 (C) A permit is valid only for the dates and the area of Rights-Of-Way specified in the permit, unless modified by the City.

131.04 (D) Each Registrant shall coordinate with the City, to the extent feasible and practical, its Construction of facilities, in order to reduce the frequency of Construction, Excavation and obstructions in the Rights-Of-Way.

131.04 (E) Permits issued under this Chapter shall be conspicuously displayed at all times at the indicated work site and shall be available for inspection by City Inspectors and authorized City personnel.

131.04 (F) All permit requests shall be in the form specified by the City and shall contain at a minimum:

131.04 (F)(1) Evidence that the Person requesting the permit is a permittee or proof that the Person requesting the permit has authority to apply for a permit on behalf of a permittee.

131.04 (F)(2) A maintenance of Traffic plan demonstrating the protective measures and devices that will be employed, consistent with uniform Traffic control standards as designated by the City, to prevent injury or damage to persons or property and to minimize disruptions to efficient pedestrian and vehicular Traffic.

131.04 (F)(3) If the Person requesting the permit is proposing to install facilities on new Poles, a statement that it is not feasible to locate its facilities on existing Utility Poles along the proposed route or beneath the surface and a summary of the factual basis for the statement.

131.04 (F)(4) If the Person requesting the permit is proposing an underground installation within new ducts or conduits to be constructed within the Rights-Of-Way:

131.04 (F)(4)(a) A statement that the permittee has verified that it is not feasible to locate its facilities in existing ducts and conduits.

131.04 (F)(4)(b) The location, depth, size and quantity of proposed new ducts or conduits; and

131.04 (F)(4)(c) A description of the excess space that may be available for use by other utilities after installation of the new facilities

131.04 (F)(5) A preliminary Construction schedule and estimated completion date.

131.04 (F)(6) Name, address and telephone number of the Person's primary contact Person and of the Person to contact in case of an Emergency.

131.04 (G) Except in the case of an Emergency, no permit will be granted to any Person:

131.04 (G)(1) Required to apply for a permit who has not done so;

131.04 (G)(2) Not in substantial compliance with the requirements of this Chapter or, if applicable to management of the City's Rights-Of-Way, with the requirements of any other provision of this Code of which the Person has received notice;

131.04 (G)(3) With an outstanding debt which is due and payable to the City arising out of the requirements of this Chapter as they relate to the City's Rights-Of-Way. This provision shall not apply where the City is legally prohibited from requiring payment of a debt as a condition of issuing a permit.

131.04 (G)(4) Where there exists grounds for the revocation of a permit, until such Person has corrected any such failure or default.

131.04 (H) The City may impose reasonable conditions upon the issuance of the permit and the performance of the Person requesting the permit thereunder in order to protect the public health, safety and welfare, to ensure the structural integrity of the Rights-Of-Way, to protect the property and safety of other users of the Rights-Of-Way, and to minimize the disruption and inconvenience to the traveling public.

131.04 (I) The permittee will comply with all reasonable requirements of the City with respect to the use or occupation of the City's Rights-Of-Way as adopted from time to time by ordinance or resolution.

131.04 (J) ***City's right to inspect***. The City shall have the right to inspect the permittee's system located In The Public Rights-Of-Way and its installation construction and maintenance to insure compliance with the terms of the permit.

§ 131.05 RIGHTS-OF-WAY PERMIT FEES.

131.05 (A) ***Established***. Permit fees shall be established by resolution of the City Commission.

131.05 (B) ***Payment of permit fees***. No permit shall be issued without prior payment of permit fees where required.

131.05 (C) ***Non-refundable fees***. Permit fees that were paid for a permit that the City has revoked for a breach are not refundable.

131.05 (D) ***Joint submissions***. Persons requesting permits are encouraged to make joint submissions for permits to work in the Rights-Of-Way at the same place and time.

§ 131.06 WORK WITHOUT A PERMIT.

131.06 (A) ***Non-Emergency situations***. Except in the case of an Emergency or in the case of Routine Maintenance as defined in Chapter 1 of this Code, any Person who constructs in Rights-Of-Way without a permit must subsequently obtain a permit, pay double the normal fee for said permit, deposit with the City the fees necessary to correct any damage to the Rights-Of-Way and comply with all of the requirements of this Chapter.

131.06 (B) ***Emergency situations***. Each permittee shall promptly notify the City of any event regarding its facilities that it considers to be an Emergency and which would require construction other than Routine Maintenance. The permittee may then proceed to take whatever action is necessary to respond to the Emergency. If such Emergency will require work in the Rights-Of-Way and occurs during times other than regular business hours, the permittee may proceed to take whatever actions are necessary in order to respond to the Emergency and shall promptly notify the City of such actions as soon as possible. In the event that the City becomes aware of an Emergency regarding a permittee's facilities, the City shall, where practicable, attempt to contact the local representative of each permittee affected, or potentially affected, by the Emergency. In any event, the City may take whatever action it deems necessary in order to respond to the Emergency, the reasonable cost of which shall be borne by the permittee whose facilities occasioned the Emergency. Each permittee shall be responsible for the cost of repairing any facilities that it or its facilities damages at any time, or that are damaged during an Emergency caused by the permittee or its facilities except where the damage to another permittee's facilities is caused by the other permittee's failure to comply with the requirements of Florida Statutes § 556.105.

§ 131.07 SUBSURFACE UTILITY ENGINEERING RESEARCH.

131.07 (A) Prior to commencing the Construction of Underground Facilities in the Rights-Of-Way, a permittee shall conduct whatever subsurface engineering research is reasonable and necessary to determine the location of existing underground Structures so as to prevent the same from being disturbed by the permittee's Construction. At a minimum the permittee shall comply with the procedures set forth in Florida Statutes § 556.105.

131.07 (B) The permittee shall bear the cost of compliance with this Section.

§ 131.08 LOCATION OF FACILITIES.

131.08 (A) The City shall have the power to prohibit or limit the placement of new or additional facilities within the Rights-Of-Way if there is insufficient space to accommodate all of the requests of permittees to occupy and use the Rights-Of-Way. The City shall strive to the extent possible to accommodate all existing and potential users of the Rights-Of-Way, but may, to the extent permitted by law, prohibit or limit placement of new or additional facilities in any Rights-Of-Way, as required because of condition of the Rights-Of-Way, the protection of existing facilities in the Rights-Of-Way, and future City plans for public improvements and Development projects which have been determined by the City Commission to be in the public interest.

131.08 (B) It is understood that there may be within the City various Utility easements or Rights-Of-Way which the City does not have the unqualified right to authorize permittees to use. Therefore, in granting permits, the City does not warrant or represent as to any particular easement or Right-Of-Way or portion thereof, that it has the right to authorize the permittee to construct thereon.

131.08 (C) To the extent required by current Florida Administrative Code regulations, a permittee shall install its facilities underground in areas where existing power or Communications Service Facilities are underground, or in areas where no facilities are installed above ground. In

areas where existing communications or power facilities are installed above ground, a permittee may install such facilities above or underground in its discretion.

131.08 (D) Permittees shall not place any fixtures or facilities where the same would interfere with any Utility or provider of Communications Services equipment. Permittees shall locate lines and equipment in such a manner as not to interfere unnecessarily with the usual travel on Streets, other Utilities providers and the rights of adjacent property Owners.

§ 131.09 LEAST DISRUPTIVE TECHNOLOGY.

All Construction or maintenance of facilities shall be accomplished in the manner that will result in the least amount of damage and disruption to the Rights-Of-Way. Trenchless Technology shall be required in all non-pervious areas for all users.

§ 131.10 EXCEPTIONS.

The City may grant an exception to any requirement of this Chapter if a permittee demonstrates, with written evidence satisfactory to the City that the exception will not create any threat to the public health, safety or welfare, or the operations of other Utilities; and either

131.10 (A) The increased economic burden and the potential adverse impact on the permittee's Construction schedule resulting from the strict enforcement of the requirements of such sections actually or effectively prohibits the ability of the permittee to provide Utility services in violation of federal Law; or

131.10 (B) The requirement unreasonably discriminates against the permittee in favor of another Person in violation of federal Law.

§ 131.11 REMOVAL AND RELOCATION OF FACILITIES.

131.11 (A) Unless otherwise provided by applicable Law, the permittee must promptly, permanently remove or relocate or both, its facilities in the Rights-Of-Way whenever the City reasonably requires, with advance written notice, such removal or relocation or both, and shall restore the Rights-Of-Way to the same condition as they existed prior to said removal or relocation or both. Unless otherwise provided by Law, the costs associated therewith shall be borne by the permittee.

131.11 (B) If a permittee fails to commence removal or relocation of its facilities as designated by the City, within 30 calendar days of the issuance of the City's removal order, or if a permittee fails to substantially complete such removal or relocation, including all associated repair of the Rights-Of-Way of the City, within 12 months thereafter, the City shall have the right to authorize any work to be done to effect the removal or relocation or both of the facilities. Unless otherwise provided by statute, the costs associated therewith shall be borne by the permittee.

§ 131.12 RIGHTS-OF-WAY RESTORATION.

131.12 (A) Permittee shall restore the Rights-Of-Way or any part thereof, including any Landscaping therein, affected by any work or facilities of the permittee to their condition prior to the permittee's Construction therein.

131.12 (B) If a permittee fails to restore the Rights-Of-Way as required in subsection (A) above, within 20 calendar days of a written demand by the City to do so, the City may restore the Rights-Of-Way itself, and the permittee shall pay the costs thereof within 30 calendar days of billing. Any written demand herein shall be deemed received five calendar days after the date postmarked or on the date of delivery if delivered by hand-delivery.

131.12 (C) The permittee shall perform the work according to the standards and with the materials specified by the City. The City shall have the authority to prescribe the manner and extent of the Restoration. The City in exercising this authority shall be guided by the following standards and considerations:

131.12 (C)(1) The number, size, depth and duration of the Excavations, disruptions or damage to the Rights-Of-Way;

131.12 (C)(2) The Traffic volume carried by the Rights-Of-Way;

131.12 (C)(3) The character of the neighborhood surrounding the Rights-Of-Way;

131.12 (C)(4) The condition of the Rights-Of-Way prior to the Excavation;

131.12 (C)(5)The remaining life-expectancy of the Rights-Of-Way affected by the Excavation;

131.12 (C)(6) Whether the relative cost of the method of Restoration to the permittee is in reasonable balance with the prevention of an accelerated depreciation of the Rights-Of-Way that would otherwise result from the Excavation, disturbance or damage to the Rights-Of-Way; and

131.12 (C)(7) The likelihood that the particular method of Restoration would be effective in slowing the depreciation of the Rights-Of-Way that would otherwise take place.

131.12 (D) The permittee shall guarantee its Restoration work and shall maintain the same and correct any improper Construction at its sole cost for 12 months following its completion. During this 12-month period, it shall, upon notification from the City, correct all Restoration work to the extent necessary using the method required by the City. Said work shall be completed within 20 calendar days of the receipt of the notice from the City.

§ 131.13 PROTECTION OF FACILITIES.

Unless otherwise provided by applicable Law, when the City performs work in the Rights-Of-Way and such work affects a Registrant's facilities, the Registrant shall make such adjustments to its facilities as may be required by the City. Unless otherwise provided by applicable Law, the

costs associated with any City work reasonably necessary to protect the Registrant's facilities will be billed to that Registrant and must be paid within 30 calendar days from the date of billing. In the event that Registrant fails to adjust its facilities as required, the City may do such work as is necessary. Unless otherwise provided by statute, the costs associated therewith will be billed to that Registrant and must be paid within 30 calendar days from the date of billing. The City shall give reasonable, and where practicable, prior written notice to a Registrant of any work that involves maintaining, supporting, or moving a Registrant's facilities.

§ 131.14 GENERAL OBLIGATIONS OF PERMITTEES.

131.14 (A) The Construction performed in the Rights-Of-Way shall be done in conformance with specifications as promulgated by the City and set forth in any and all applicable codes. Any change in the City's specifications or codes shall be duly noticed, as required by Law.

131.14 (B) Within five calendar days of the time the work under any permit hereunder is completed, the permittee shall notify the City.

131.14 (C) The permittee shall make the work site available to the City and to all others as authorized by Law for inspection at all reasonable times during the execution and upon completion of the work.

131.14 (D) Obtaining a permit does not relieve permittee of its duty to obtain all other necessary permits, licenses, and authority and to pay all fees required by any other city, county, state, or federal rules, Laws or regulations.

131.14 (E) Except in the case of an Emergency, no Rights-Of-Way Construction may be performed when climatic conditions are unreasonable for such work.

131.14 (F) A permittee shall not so obstruct Rights-Of-Way in a manner that will interfere with the natural free and clear passage of water through the gutters or other waterways.

131.14 (G) Private vehicles may not be parked within or adjacent to a permit area. Vehicles and machinery necessary for permitted Construction work will be allowed to be parked in or adjacent to the permit area during periods when they are in use. No such vehicles shall remain in the permit area when they are not in use unless specifically authorized in the permit.

131.14 (H) Prior to any Excavation in the Rights-Of-Way for Construction, installation, repair or maintenance, the permittee shall call to locate any underground equipment in accordance with Florida Statutes Chapter 556. All permittees shall be members of the Sunshine State One Call of Florida, Inc. or any successor alert and warning system to protect and locate its underground equipment.

131.14 (I) ***Construction standards***. A permittee shall construct, maintain, install, remove and/or repair its facilities in the Rights-Of-Way in compliance with all applicable Construction standards as established by all local, State or federal Law. Permittee shall use and exercise due caution, care, skill and expertise in performing work in the Rights-Of-Way and shall take all reasonable steps to safeguard the work site areas. At all times, permittee shall keep the

work site areas in a clean and secure manner and prevent unnecessary risk of injury to workers, City employees and members of the public.

131.14 (J) ***Installation and Construction schedule; inspections***. In the interest of the public's health, safety and welfare, permittees shall cooperate with the City in coordinating the use of the Rights-Of-Way. Upon request by the City, a permittee shall coordinate work under a permit with any other Construction, installation or repair that may be occurring or soon scheduled to occur in the subject Rights-Of-Way and reasonably alter its Construction schedule as necessary so as to minimize disruptions and disturbance in the Rights-Of-Way.

131.14 (K) ***Maintenance***. A permittee shall maintain its facilities in the Rights-Of-Way in a safe condition.

§ 131.15 ENFORCEMENT OF PERMIT OBLIGATIONS.

131.15 (A) The City may order the suspension of work under a permit and ultimately may revoke any permit, without refunding any fees, in the event of a substantial breach of the terms and conditions of any condition of the permit. The types of substantial breach by permittee may include, but are not limited to:

131.15 (A)(1) The violation of any material provision of the permit;

131.15 (A)(2) An evasion or attempt to evade any material provision of the permit, or the perpetration or attempt to perpetrate any fraud or deceit upon the City or its citizens;

131.15 (A)(3) Any material misrepresentation of fact in the process of permittee's request for a permit;

131.15 (A)(4) The failure to maintain and protect pedestrian and vehicular Traffic;

131.15 (A)(5) The failure to properly restore the Rights-Of-Way; or

131.15 (A)(6) The failure to correct a violation of the permittee's obligations under this Chapter within the specified time of an order to do so issued by the City.

131.15 (B) If the City determines that the permittee has committed a substantial breach of a term or condition of the permit, the City shall make a written demand upon the permittee to remedy such violation. The demand shall state that continued violations may be cause for revocation of the permit. Further, a substantial breach, as stated above, will allow the City to place additional or revised conditions on the permit.

131.15 (C) Within five calendar days of receiving notification of the breach, permittee shall contact the City with a plan, acceptable to the City, for its correction. Permittee's failure to so contact the City, or the permittee's failure to submit an acceptable plan, or permittee's failure to reasonably implement the approved plan, shall be cause for revocation of the permit. Further, permittee's failure to so contact the City, or the permittee's failure to submit an acceptable plan, or permittee's failure to implement the approved plan, shall be cause for the City to reject any further permit requests until it is cured to the City's satisfaction.

131.15 (D) If a permittee works in the Rights-Of-Way without a permit, permittee's permit may be revoked and the permittee shall not be allowed further permits for one full year, except for Emergency repairs and service requirements as mandated by State or federal regulations.

131.15 (E) If a permit is revoked, the permittee shall also reimburse the City for the City's reasonable costs, including Restoration costs and the costs of collection and reasonable attorneys' fees incurred in connection with such revocation.

131.15 (F) The City may issue an immediate stop work order where the permittee's Construction poses a serious threat to the health, safety or welfare of the public until such time as such serious threat has abated. Upon issuance of such order the permittee shall immediately cease all work in the Right-Of-Way except that the permittee shall take all actions necessary to clean and secure all work areas and, to prevent any damage or degradation of City property or any facilities in the Rights-Of-Way.

§ 131.16 INDEMNIFICATION.

131.16 (A) A permittee shall indemnify, defend and hold harmless and at City's option, pay for an attorney selected by City, to defend the City and the City's consultants, Engineers, attorneys and assigns and their officials, employees and agents (collectively referred to as "indemnities") and each of them from and against all loss, costs, penalties, fines, damages, claims, expenses (including attorney's fees) or liabilities (collectively referred to as "liabilities") by reason of any injury to or death of any Person or damage to or destruction or loss of any property arising out of, resulting from, or in connection with:

131.16 (A)(1) The performance or non-performance of the services contemplated by this Chapter which is or is alleged to be directly or indirectly caused, in whole or in part, by any act, omission, default or negligence (whether active or passive) of the permittee or its employees, agents or subcontractors (collectively referred to as "permittees"), regardless of whether it is, or is alleged to be, caused in whole or in part (whether joint, concurrent or contributing) by any act, omission, default or negligence (whether active or passive) of the Indemnities, or any of them; or

131.16 (A)(2) The failure of the permittee to comply with any of the paragraphs herein or the failure of the permittee to conform to statutes, ordinances, or other regulations or requirements of any governmental authority, federal or State, in connection with the actions taken under this Chapter.

131.16 (B) The indemnification obligations under this Chapter shall not be limited in any way by any limitation on the amount or type of damages, compensation, or benefits payable by or for the permittee and/or Persons employed or utilized by the permittee, in the performance of the actions taken under this Chapter, under any insurance required by this Chapter including, but not limited to, workers' compensation acts, disability benefit acts, or other Employee benefit acts.

131.16 (C) The obligations of the permittee under this Chapter shall not extend to the liability of the consultant, the consultant's consultants, and agents and employees or any of them arising out of:

131.16 (C)(1) The preparation or approval of maps, drawings, opinions, reports, surveys, change orders, designs or specifications; or

131.16 (C)(2) The giving of or the failure to give directions or instructions by the consultant, the consultant's consultants, and agents and employees of any of them provided such giving or failure to give is the primary cause of the injury or damage.

§ 131.17 STATUTORY EXCEPTIONS.

No requirement set forth in this Chapter shall apply to any Utility that is exempted from complying with such a requirement under State or federal Law or regulation.

POLES, WIRES AND CONDUITS

§ 131.30 AUTHORITY OF CITY TO DIRECT PLACING AND REMOVING.

To the extent permitted by Law, it shall be within the authority of the City to so direct the placing of Poles and wires in the Streets, alleys and public places in the City that the same shall cause as little obstruction as possible, either to public travel or public use of such thoroughfares or to private use and enjoyment of adjacent property. The City shall have authority to compel the removal of unnecessary or unsafe Poles to the extent permitted by Law.

§ 131.31 REMOVAL OF CONDEMNED POLES.

Any Person or company owning and using any such Poles who shall fail or refuse, after five days' notice from the City, to remove any Pole deemed by the City unsuitable, unsafe or improperly located or the location of which the City shall require to be changed, shall be considered a Violator of this Chapter and subject to suitable penalty by the court, and the erection or use of any Poles rejected or condemned by the City shall subject the offender, upon conviction, to the penalty provided in § 162.62, Florida Statutes.

ADDITIONAL PROVISIONS RELATING TO ALL RIGHT-OF-WAY USERS

§ 131.40 TERMINATION.

131.40 (A) The City may declare a forfeiture in termination of, and revoke and cancel all rights granted under this Chapter including any permits, registration, or user agreement where applicable, if:

131.40 (A)(1) A federal or State authority suspends, denies, or revokes a permittee's certification to provide services;

131.40 (A)(2) The permittee's use of the Public Rights-Of-Way presents a danger to the general public and other users of the Public Rights-Of-Way; or,

131.40 (A)(3) The permittee has Abandoned its system.

131.40 (B) Prior to such termination by the City resulting from a violation by the permittee of any of the provisions of this Section, the provider shall be served with a written notice setting forth all matters pertinent to such violation, and describing the action of the City with respect thereto. The permittee shall then have 60 calendar days after service of such notice within which to cure the violation, or within which to present a plan, satisfactory to the City, to accomplish the same. In the event of such termination, the permittee shall, within a reasonable time following demand by the City, remove or Abandon its facilities and take such steps as are necessary to render every portion of the system remaining within the Public Rights-Of-Way of the City safe, and shall thereupon be deemed to have Abandoned same in its entirety; and the same shall thereupon become the sole property of the City without payment to the provider. If the City agrees to the Abandonment, the permittee shall incur, from that time forward, no future obligations with respect to the facilities.

§ 131.41 CONTINUING POLICE POWERS.

The permittee shall at all times during the life of its permits and/or user agreement with the City be subject to all lawful exercise of the police power of the City and to all lawful non-discriminatory regulations as the City subsequently enacts based on its existing police powers or additional powers given it in the future.

§ 131.42 CIVIL PENALTIES AND NON-EXCLUSIVE REMEDIES FOR VIOLATIONS.

131.42 (A) Pursuant to Florida Statutes Chapter 162, in addition to any other judicial or administrative remedies or penalties provided by Law, rule, regulation or ordinance, any Person who violates any of the provisions of this Chapter, any lawful cease or desist or stop work order of the City, any notice to correct a violation or any assurance of voluntary compliance, or any other lawful order of the City, or any condition, limitation or restriction on the permission granted a provider under this Chapter to occupy the City's Rights-Of-Way, shall be subject to the judicial or administrative imposition and recovery of a civil penalty in an amount of not more than $250 per first offense and up to $500 for repeat violations. If any violation of this Chapter is judicially determined to have caused irreparable injury, then the Violator shall be subject to a civil penalty of not more than $5,000. Each day during any portion of which a violation occurs or continues to occur constitutes a separate offense. Such monies recovered by the City shall be deposited in a separate City fund to use exclusively for enforcement of this Chapter. This Section shall be enforced in a manner consistent with Florida Statutes Chapter 162.

131.42 (B) It shall be unlawful for any Person to violate any of the provisions of this Chapter. In addition to any other judicial or administrative remedies provided by Law, rule, regulation, ordinance, or this Chapter, the City shall have the following judicial remedies available to enforce the provisions of this Chapter:

131.42 (B)(1) The City may institute a civil action in a court of competent jurisdiction to seek temporary or permanent declaratory or injunctive relief to enforce compliance with or prohibit the violation of any of the provisions of this Chapter.

131.42 (B)(2) The City may institute a civil action in a court of competent jurisdiction or an appropriate administrative proceeding to impose and recover the civil penalties referred to in subsection (A) above.

131.42 (B)(3) The City may institute a civil action in a court of competent jurisdiction to seek restitution and other equitable relief to recover any sums and costs expended by the City for tracing, investigating, preventing, controlling, abating or remedying any violation of any of the provisions of this Chapter.

131.42 (C) The City may recover its attorneys' fees in any civil action instituted hereunder in which it substantially prevails.

131.42 (D) All judicial and administrative remedies in this Chapter are independent and cumulative.

§ 131.43 NO WARRANTIES OR REPRESENTATIONS BY CITY.

The City makes no warranties or representations regarding the fitness or suitability of its property for the installation of the permittees, cables or conduits or equipment and any performance of work or costs incurred by the permittee or provisions of services shall be at the permittee's sole risk and expense.

§ 131.44 PREEMPTION.

In the event any provision of this ordinance is specifically preempted, or judicially determined to be preempted by State or federal Law, then the preempted provision shall automatically be deemed null and void and the superseding provision of State or federal Law shall prevail.

CHAPTER 132. PUBLIC RIGHTS-OF-WAY REGULATIONS FOR COMMUNICATIONS SERVICE PROVIDERS.

§ 132.01 INTENT AND PURPOSE.

132.01 (A) It is the intent of the City to promote the public health, safety and general welfare by:

132.01 (A)(1) Providing for the placement and maintenance of Communications Facilities In The Public Rights-Of-Way within the City;

132.01 (A)(2) Adopting and administering reasonable rules and regulations not inconsistent with State and federal Law, including Florida Statutes § 337.401 and §§ 610.102 - 610.117 the City's home-rule authority, and in accordance with the provisions of the Federal Telecommunications Act of 1996 and other federal and State law;

132.01 (A)(3) Establishing reasonable rules and regulations necessary to manage the placement and maintenance of Communications Facilities In The Public Rights-Of-Way by all Communications Services Providers, Cable and Video Service Providers, and certificate holders; and

132.01 (A)(4) Minimizing disruption to the Public Rights-Of-Way.

132.01 (B) In regulating its Public Rights-Of-Way, the City shall be governed by and shall comply with all applicable federal and State Laws.

§ 132.10 REGISTRATION FOR PLACING OR MAINTAINING COMMUNICATIONS FACILITIES IN PUBLIC RIGHTS-OF-WAY.

132.10 (A) ***Registration required***. A Communications Services Provider, Cable or Video Service Provider or certificate holder that desires to place or maintain a Communications Facility In Public Rights-Of-Way in the City shall first register with the City in accordance with this Section. Subject to the terms and conditions prescribed in this Chapter, a Registrant may place or maintain a Communications Facility In The Public Rights-Of-Way.

132.10 (B) ***Scope of registration***. A registration shall not convey any title, equitable or legal, In The Public Rights-Of-Way. Registration under this Chapter governs only the placement or maintenance of Communications Facilities In Public Rights-Of-Way. Registration does not excuse a Communications Services Provider, Cable or Video Service Provider from obtaining appropriate access or Pole Attachment agreements before locating its facilities on the City's or another Person's facilities. Registration does not excuse a Communications Services Provider, Cable or Video Service Provider from complying with all applicable Law, including City ordinances, codes or regulations, including this Section.

132.10 (C) ***Required information***. Each Communications Services Provider, Cable or Video Service Provider that desires to place or maintain a Communications Facility In Public Rights-Of-Way in the City shall file a single registration with the City that shall include the following information:

132.10 (C)(1) Name of the Applicant;

132.10 (C)(2) Name, address and telephone number of the Applicant's primary contact Person in connection with the registration and of the Person to contact in case of an Emergency;

132.10 (C)(3) A copy of federal or State certification authorizing the Applicant to do business in the State of Florida and to provide service in the City;

132.10 (C)4) Acknowledgment that Applicant has received and reviewed a copy of this Chapter, and, when applicable, the current Communications Services tax rate established by the City; and

132.10 (C)(5) Evidence of the insurance coverage and submission of a security fund when required by this Section.

132.10 (D) ***Effectiveness***. The City Manager shall review the information submitted by the Applicant. If the Applicant submits information in accordance with subsection (C) above, the registration shall be effective and the City shall notify the Applicant of the effectiveness of registration in writing. The effectiveness of a registration shall not relieve the Applicant of the obligation to obtain any and all necessary permits before any work is commenced If the City determines that the information has not been submitted in accordance with subsection (C) above, the City shall notify the Applicant in writing of the non-effectiveness of registration, and reasons for the non-effectiveness. The City shall so notify an Applicant within 30 calendar days after receipt of registration information from the Applicant.

132.10 (E) ***Cancellation***. A Registrant may cancel a registration upon written notice to the City that the Registrant will no longer place or maintain any Communications Facilities In Public Rights-Of-Way and will no longer need to obtain permits to perform work In The Public Rights-Of-Way. A Registrant cannot cancel a registration if the Registrant continues to place or maintain any Communications Facilities in Public Rights-Of-Way.

132.10 (F) ***Nonexclusive registration***. Registration shall be nonexclusive. Registration shall not establish any right or priority to place or maintain a Communications Facility in any particular area In Public Rights-Of-Way within the City Registrants are expressly subject to any future amendment to or replacement of this Chapter and further subject to any additional City ordinances, as well as any state or federal Laws that may be enacted.

132.10 (G) ***Renewal and change of registration information***. By April 1 of even numbered years, a Registrant shall renew its registration in accordance with the registration requirements in this Chapter. Within 30 calendar days of any change in the information required to be submitted pursuant to subsection (C) above, a Registrant shall provide updated information to the City. If no information in the then-existing registration has changed, the renewal may state that no information has changed. Failure to renew a registration may result in the City restricting the issuance of additional permits until the Registrant has complied with the registration requirements of this Chapter.

132.10 (H) ***Permit required***. In accordance with applicable City ordinances, codes or regulations and this Chapter, a permit shall be required of a Communications Services Provider, Cable or Video Service Provider that desires to place a Communications Facility In Public Rights-Of-Way. An effective registration shall be a condition of obtaining a permit. Notwithstanding an effective registration, permitting requirements shall continue to apply. A permit may be obtained by or on behalf of a Registrant having an effective registration if all permitting requirements are met.

§ 132.11 PLACEMENT OR MAINTENANCE OF A COMMUNICATIONS FACILITY IN PUBLIC RIGHTS-OF-WAY.

132.11 (A) ***Compliance with State and local Law***. Registrant agrees at all times to comply with and abide by all applicable provisions of the State statutes and City ordinances, codes and regulations in placing or maintaining a Communications Facility In Public Rights-Of-Way. A Registrant shall at all times be subject to all lawful exercise of the police power of the City.

132.11 (B) ***Permits***. A Registrant shall not commence to place a Communications Facility In Public Rights-Of-Way until all applicable permits have been issued by the City and the Registrant has complied with all applicable processes required by City or other appropriate authority, except in the case of an Emergency. Registrant shall provide prompt notice to the City of the placement or maintenance of a Communications Facility In Public Rights-Of-Way in the event of an Emergency. Registrant acknowledges that as a condition of granting such permits, the City may impose reasonable rules or regulations governing the placement or maintenance of a Communications Facility In Public Rights-Of-Way. Permits shall apply only to the areas of Public Rights-Of-Way specifically identified in the permit. The City may issue a blanket permit to cover certain activities, such as Routine Maintenance and repair activities, which may otherwise require individual permits or may impose lesser requirements.

132.11 (C) ***Construction proposal required***. As part of any permit application to place a new or replace an existing Communications Facility In Public Rights-Of-Way, the Registrant shall provide a proposal for Construction of the Communications Facility that sets forth at least the following:

132.11 (C)(1) An engineering plan signed and sealed by a Florida Registered Professional Engineer, or prepared by a Person who is exempt from such registration requirements as provided in Florida Statutes § 471.003, identifying the location of the proposed facility, including a description of the facilities to be installed, where it is to be located, and the approximate size of facilities and equipment that will be located In Public Rights-Of-Way;

132.11 (C)(2) A description of the manner in which the facility will be installed (i.e. anticipated Construction methods and/or techniques);

132.11 (C)(3) A maintenance of Traffic plan for any disruption or obstruction of the Public Rights-Of-Way;

132.11 (C)(4) Information on the ability of the Public Rights-Of-Way to accommodate the proposed facility, if available (such information shall be provided without certification as to correctness, to the extent obtained from other Persons with facilities In The Public Rights-Of-Way);

132.11 (C)(5) If appropriate given the facility proposed, an estimate of the cost of Restoration to the Public Rights-Of-Way;

132.11 (C)(6) The timetable for Construction of the project or each phase thereof, and the areas of the City which will be affected; and

132.11 (C)(7) Such additional information requested by the City that is reasonably necessary to review the permit application.

132.11(D) ***Power to prohibit or limit placement***. The City shall have the power to prohibit or limit the placement of new or additional Communications Facilities within the Public Rights-Of-Way if there is insufficient space to accommodate all of the requests to place and maintain facilities in that area of the Public Rights-Of-Way, for reasons of Traffic conditions, public safety, the protection of existing facilities In The Public Rights-Of-Way or to accommodate City plans for public improvements or projects that the City determines are in the public interest and to the extent not prohibited by applicable Law.

132.11 (E) ***No unreasonable interference***. All Communications Facilities shall be placed and maintained so as not to interfere unreasonably with the use of the Public Rights-Of-Way by the public and so as not to cause unreasonable Interference with the rights and convenience of property Owners who adjoin any of the Public Rights-Of-Way. The Registrant shall endeavor to install all Communications Facilities underground. To the extent not inconsistent with public service commission regulations, the City may require the use of Trenchless Technology (i.e., directional bore method) for the installation of facilities In The Public Rights-Of-Way as well as joint trenching or the co-location of facilities in existing conduit. In making such requests, the City shall take into consideration several factors including inconvenience to the public and other users of Rights-Of-Way and the economic and technical feasibility of such requests. The Registrant shall be liable for the displacement, damage or destruction of any property, Irrigation system or Landscaping as a result of the placement or maintenance of its facility within the Public Rights-Of-Way. The appropriate City official may issue such rules and regulations concerning the placement or maintenance of a Communications Facility In Public Rights-Of-Way as may be consistent with this Chapter and other applicable Law.

132.11 (F) ***Notification of work on Rights-Of-Way***. Prior to the commencement of any major work by the Registrant pertaining to the placement and maintenance of communication facilities within the Public Rights-Of-Way, the City Manager may require the Registrant to issue notice of the work using reasonable means to property Owners whose property either adjoins or lays within 200 feet of such Rights-Of-Way (the "notification area"). The notification area may be expanded at the City's discretion and notice shall be affected in a manner deemed appropriate by the City Manager.

132.11 (G) ***Compliance with applicable Law***. All safety practices required by applicable Law or accepted industry practices and standards shall be used during the placement or maintenance of Communications Facilities. A Registrant's system shall comply with the FCC's rules and regulations of the Emergency Alert System when applicable.

132.11 (H) ***Restoration of Rights-Of-Way***. A Registrant shall, at its own expense, restore the Public Rights-Of-Way to at least its original condition before such work In Public Rights-Of-Way, subject to the City's satisfaction upon inspection. Registrant shall warrant its Restoration for a period of 12 months after completion of such Restoration. If the Registrant fails to make such Restoration within 20 calendar days after completion of Construction, or such other time as may be required by the City, the City may after written notice to the Registrant, perform such Restoration using City employees, agents or contractors, and charge all costs of the Restoration against the Registrant in accordance with Florida Statutes § 337.402, and require reimbursement within 30 calendar days after the submission of the bill by the City to the Registrant.

132.11 (I) ***Removal and relocation***. Removal or relocation at the direction of the City of a Registrant's Communications Facility In Public Rights-Of-Way shall be governed by the provisions of Florida Statutes §§ 337.403 and 337.404.

132.11 (J) ***Permit scope***. A permit from the City constitutes authorization to undertake only certain activities on Public Rights-Of-Way in accordance with this Chapter, and does not create a property right or grant authority to impinge upon the rights of others who may have an interest In The Public Rights-Of-Way.

132.11 (K) ***Maintenance of Rights-Of-Way***. A Registrant shall maintain its Communications Facility In Public Rights-Of-Way in a manner consistent with accepted industry practice, standards and applicable Law, and perform, at its expense, any tests designed to demonstrate compliance with the requirements of this Chapter and applicable Law, and shall provide, upon request, a copy of the test results promptly to the City.

132.11 (L) ***Compliance with local, State, and federal Law***. All Construction, installation and maintenance of a Registrant's Communications Facilities In The Public Rights-Of-Way shall comply with the National Electrical Safety Code, the National Electric Code, the Florida Building Code and all laws established by all local, State or federal Law and accepted industry practices or standards. Registrant shall use and exercise due caution, care and skill in performing work In The Public Rights-Of-Way and shall take all reasonable steps to safeguard work site areas.

132.11 (M) ***Excavation safety***. In connection with Excavation In The Public Rights-Of-Way, a Registrant shall, where applicable, comply with the Underground Facility Damage Prevention and Safety Act set forth in Florida Statutes Chapter 556.

132.11 (N) ***Request to coordinate***. In the interest of the public's health, safety and welfare, upon request of the City, a Registrant shall coordinate placement or maintenance activities under a permit with any other work, Construction, installation or repairs that may be occurring or scheduled to occur within a reasonable time frame in the subject Public Rights-Of-Way. The City may require a Registrant to alter reasonably its placement or maintenance schedule for permitted work as necessary so as to minimize disruptions and disturbance In The Public Rights-Of-Way. The City may provide a more definite time frame based on specific City Construction or maintenance schedules.

132.11 (O) ***Worker identification required***. A Registrant shall cause all its field employees and field contract workers to wear a picture identification badge indicating that they work for the provider. This badge shall be clearly visible to the public. Upon request, employees

must provide a company telephone number for City employees and Subscribers to contact. A Registrant or contractor shall also require all company vehicles to prominently display the name under which the Registrant or contractor is doing business, and logo, if any, in a manner clearly visible to the public.

132.11 (P) ***No interference***. A Registrant shall not place or maintain its Communications Facilities or equipment so as to interfere, displace, damage or destroy any facilities, including but not limited to, sewers, gas or water mains, storm drainage, pipes, cables or conduits of the City, landscaped areas and Swales, or any other Registrant Person's facilities lawfully occupying the Public Rights-Of-Way of the City. Further, a Registrant shall not place or maintain its Communications Facilities, company or contractor vehicles, or related equipment so as to interfere with the safety of the notification area.

132.11 (Q) ***No warranties or representations***. City makes no warranties or representations regarding the fitness, suitability or availability of Public Rights-Of-Way for the Registrant's Communications Facilities and any performance of work or costs incurred by Registrant or provision of services shall be at Registrant's sole risk. Nothing in this Chapter shall affect the City's authority to add, vacate or Abandon Public Rights-Of-Way and City makes no warranties or representations regarding the availability of any added, vacated or Abandoned Public Rights-Of-Way for Communications Facilities.

132.11 (R) ***Inspections***. The City shall have the right to make such inspections of facilities placed or maintained In Public Rights-Of-Way as it finds necessary to ensure compliance with this Chapter. In the event the City determines that a violation exists with respect to Registrant's placement or maintenance of facilities In The Public Rights-Of-\Way that is not considered to be an Emergency or danger to the public health, safety or welfare, the City will provide Registrant no less than three calendar days written notice setting forth the violation and requesting correction.

132.11 (S) ***Installation location plans***. A permit application to place a new or replace an existing Communications Facility In Public Rights-Of-Way shall include plans showing the location of the proposed installation of facilities In The Public Rights-Of-Way. If the plans so provided require revision based upon actual installation, the Registrant shall promptly provide revised plans or "as-builts" upon completion of any installation or Construction. The plans shall be in a digitized format showing the two-dimensional location of the facilities based on the City's geographical database, or other format acceptable to the City. The Registrant shall provide such plans at no cost to the City. The City shall maintain the confidentiality of such plans and any other information provided in accordance with Florida Statutes § 202.195.

132.11 (T) ***Reservation of rights***. The City reserves the right to place and maintain, and permit to be placed or maintained, sewer, gas, water, electric, storm drainage, communications, and other facilities, cables or conduit, and to do, and to permit to be done, any underground and overhead installation or improvement that may be deemed necessary or proper by the City In Public Rights- Of-Way occupied by the Registrant. Registrant may allow City facilities to be co-located within City's Public Rights-Of-Way through the use of a joint trench during Registrant's Construction project. Such joint trench projects shall be negotiated in good faith by separate agreement between Registrant and City and may be subjected to other City Rights-Of-Way requirements. The City further reserves without limitation the right to alter, change, or cause to be

changed, the grading, installation, relocation or width of the Public Rights-Of-Way within the limits of the City and within said limits as same may from time to time be altered.

132.11 (U) ***Temporary support of authorized work***. Subject to applicable Law, a Registrant shall, on the request of any Person holding a permit issued by the City, temporarily support, protect, raise or lower its Communications Facilities to permit the work authorized by the permit. The expense of such temporary support, protection, raising or lowering of facilities shall be paid by the Person requesting the same, and the Registrant shall have the authority to require such payment in advance. The Registrant shall be given not less than 30 calendar days advance written notice to arrange for such temporary relocation. If the City requests the temporary support, protection, raising or lowering of a facility for a public purpose, the City shall not be charged for the temporary support, protection, raising or lowering of the facility.

132.11 (V) ***Installation of Telecommunications Towers,*** **Antenna*s and equipment facilities In The Public Rights-Of-Way***. For the purposes of this subsection (V), to the extent not expressly prohibited by federal Law, State Law, the City Code or applicable Florida Public Service Commission rules and regulations, the standards contained herein apply prospectively for all new Antennas and Equipment Facilities, as defined by City Code, and a legally maintained light Pole and/or Utility Pole In The Public Rights-Of-Way shall be referred to as a ("vertical Structures"). An Antenna and/or Equipment Facility placed In The Public Rights-Of-Way shall be subject to the following criteria:

132.11 (V)(1) No Telecommunications Towers may be installed or placed In The Public Rights-Of-Way;

132.11 (V)(2) No Equipment Facility may be installed or placed In The Public Rights-Of-Way, with the exception of existing equipment facilities installed to support an Antenna that has been placed on a vertical Structure, with the consent of its Owner, subject to the standards contained in this subsection (V);

132.11 (V)(3) Any Antenna or Equipment Facility installed In The Public Rights-Of-Way shall be subject to all site plan review and approval and permitting requirements of the City;

132.11 (V)(4) No Communications Services Provider or Registrant may Overlash an Antenna for the provision of Communications Services onto an Attachment In The Public Rights-Of-Way;

132.11 (V)(5) No Equipment Facility shall be placed on the ground In The Public Rights-Of-Way;

132.11 (V)(6) No back-up power sources including, but not limited to, generators and fuel storage tanks, may be installed or placed In The Public Rights-Of-Way;

132.11 (V)(7) An Equipment Facility used in association with an Antenna mounted on a vertical Structure shall be placed in any of the following areas:

132.11 (V)(7)(a) Underground In The Public Rights-Of-Way; or

132.11 (V)(7)(b) On an adjacent property in accordance with the City Code, with the consent of the property Owner, provided that all the wiring is underground; or

132.11 (V)(8) A provider of Communications Services that wants to mount an Antenna on a vertical Structure must submit an application in accordance with the City's Wireless Telecommunications Facilities Chapter, register with the City pursuant to § 132.10 herein, and comply with all indemnification, insurance and security fund requirements contained herein. An application pursuant to this Section shall not be deemed a Collocation application;

132.11 (V)(9) An Antenna may be mounted on an existing vertical Structure, with the consent of its owner, provided the height of the Antenna does not extend more than ten feet above the top of the vertical Structure. An existing vertical Structure may be modified, replaced or rebuilt to accommodate an Antenna so long as the height of the vertical Structure is not increased by more than ten feet;

132.11 (V)(10) An Antenna that is mounted to a vertical Structure located adjacent to real property used as a Single Family Residence shall be flush mounted to the vertical Structure;

132.11 (V)(11) An Antenna that is mounted to a vertical Structure shall not have any type of lighted signal, lights, or illuminations unless required by an applicable federal, State, or local rule, regulation or Law including, but not limited to, the City's Wireless Telecommunications Facilities Chapter;

132.11 (V)(12) An Antenna that is mounted to a vertical Structure shall comply with any applicable FCC Emissions Standards;

132.11 (V)(13) The design, Construction, set back, installation and Landscaping of an Antenna mounted to a vertical Structure and an Equipment Facility used in association with an Antenna shall comply with applicable Law including, but not limited to, the Florida Building Code and the City's Wireless Telecommunications Facilities Chapter;

132.11 (V)(14) No commercial advertising shall be allowed on an Antenna mounted to a vertical Structure;

132.11 (V)(15) Any accessory equipment and related housing In The Public Rights-Of-Way that is used in conjunction with an Antenna mounted to a vertical Structure shall comply with any applicable local rules, regulations, ordinances, or laws governing the placement, Landscaping and design of such equipment;

132.11 (V)(16) An Owner of an Antenna or equipment that places an Antenna or Equipment Facility underground In The Public Rights-Of-Way shall maintain appropriate membership in the one-call notification system or participate in any other applicable notification center for subsurface installations as provided by Florida Statutes; and

132.11 (V)(17) An Owner of an Antenna or Equipment Facility which places an Antenna or Equipment Facility In The Public Rights-Of-Way pursuant to this subsection (V) is subject to

any applicable provisions governing placement, maintenance or enforcement contained in this Chapter as determined by the City Manager.

§ 132.12 COMPENSATION FOR USE OF RIGHTS-OF-WAY

132.12 (A) ***Compensation required***. A Registrant that places or maintains Communications Facilities In The Public Rights-Of-Way shall be required to pay compensation to the City as required by applicable Law and ordinances of the City.

132.12 (B) ***Registrants not providing local services***. A Registrant that places or maintains Communications Facilities In The Public Rights-Of-Way, other than a Registrant that provides local services, as defined in Florida Statutes § 202.11(2), within the City, shall pay to the City the fees required to be paid by providers of toll service within the City.

132.12 (C) ***Fees***. A Registrant, that makes physical Use of the Public Rights-Of-Way and who is not providing Communications Services as defined in Florida Statutes § 202.11(2), or a Registrant that makes physical Use of the Public Rights-Of-Way and who is not serving a Communications Services customer at retail within the jurisdictional limits of the City at the time the Registrant begins to make physical Use of the Public Right-Of-Way, shall pay to the City annually in an amount set forth by City resolution. The fee or other consideration imposed pursuant to this subsection shall not apply in any manner to any communications company which provides Communications Services as defined in Florida Statutes § 202.11(2), for any services provided by such communications company. Notwithstanding anything herein to the contrary, the City shall at all times hereby require the maximum compensation allowed under applicable Law.

132.12 (D) Except to the extent prohibited by applicable Law:

132.12 (D)(1) The fee payments to be made pursuant to this Section shall not be deemed to be in the nature of a tax;

132.12 (D)(2) Such fee payments shall be in addition to any and all taxes of a general applicability;

132.12 (D)(3) A Registrant shall not have or make any claim for any deduction or other credit of all or any part of the amount of said fee payments from or against any of said City taxes or other fees or charges of general applicability which Registrant is required to pay to the City, except as required by Law; and

132.12 (E) The fee specified herein is the minimum consideration for use of the Public Rights-Of-Way, including all public easements, for the purpose of installing and maintaining a Communications Facility.

§ 132.13 SUSPENSION OF PERMITS.

132.13 (A) ***Suspension***. Subject to § 132.14 below and providing reasonable notice and an opportunity to cure, the City Manager may suspend a permit issued or deny an application for a subsequent permit to a Registrant for work In The Public Rights-Of-Way for one or more of the following:

132.13 (A)(1) Failure to satisfy permit conditions, or conditions set forth in this Chapter or other applicable City ordinances, codes or regulations governing placement or maintenance of Communications Facilities In Public Rights-Of-Way, including without limitation, failure to take reasonable safety precautions to alert the public of work at the work site, or to restore any Public Rights-Of-Way;

132.13 (A)(2) Misrepresentation or fraud by Registrant in a registration or permit application to the City;

132.13 (A)(3) Failure to properly renew or ineffectiveness of registration;

132.13 (A)(4) Failure to relocate or to remove facilities as may be lawfully required by the City; or

132.13 (A)(5) Failure to maintain pedestrian or vehicular Traffic.

132.13 (B) ***Written notification***. After the suspension or denial of a permit pursuant to this Section, the City shall provide written notice of the reason to the Registrant.

§ 132.14 APPEALS.

132.14 (A) Final, written decisions of the City Manager suspending or denying a permit, denying an application for a registration or denying an application for renewal of a registration are subject to appeal. An appeal must be filed with the City within 30 calendar days of the date of the final, written decision to be appealed. Any appeal not timely filed as set forth above shall be waived. The City Commission shall act as the "hearing officer" and consider an appeal pursuant to this Section. The hearing shall occur within 45 calendar days of the receipt of the appeal, unless waived by the Registrant, and a written decision shall be rendered within 20 calendar days of the hearing. Upon correction of any grounds that gave rise to a suspension or denial, the suspension or denial shall be lifted.

132.14 (B) Nothing in this Chapter shall affect or limit the remedies the City has available under applicable Law.

§ 132.15 CONDITIONAL USE OF PUBLIC RIGHTS-OF-WAY.

132.15 (A) In the event Registrant desires to Use its existing facilities or to construct new facilities for the purpose of providing other Utility or non-Utility services to existing or potential consumers or resellers, by providing any other services other than the provision of Communications Services, or for providing any other Use to existing or potential consumers, a Registrant shall seek such additional and separate authorization from City for such activities as may be required by applicable Law.

132.15 (B) To the extent that any Person or Registrant leases or otherwise uses the facilities of a Person that is duly registered or otherwise authorized to place or maintain facilities In

The Public Rights-Of-Way of the City, such Person or registrant shall make no claim, nor assert any right, which will impede the lawful exercise of the City's rights, including requiring the removal of such facilities from the Public Rights-Of-Way of the City, regardless of the effect on Registrant's ability to place or maintain its own Communications Facilities In Public Rights-Of-Way of the City.

§ 132.16 TERMINATION OF REGISTRATION.

132.16 (A) The involuntary termination of a previously effective registration may only be accomplished by an action of the City Commission. The City may declare the registration terminated and revoke and cancel all privileges granted under that registration if:

132.16 (A)(1) A federal or Florida authority suspends, denies, or revokes a Registrant's certification or license to provide communications service;

132.16 (A)(2) The Registrant's placement and maintenance In The Public Rights-Of-Way presents an extraordinary danger to the general public or other users of the Public Rights-Of-Way; or

132.16 (A)(3) The Registrant Abandons all of its communications facilities In The Public Rights-Of-Way.

132.16 (B) Prior to such termination for any of the reasons set forth in this Section, the City Manager shall notify the Registrant in writing setting forth the matters pertinent to such reasons and describing the proposed action of the City with respect thereto. The Registrant shall have 60 calendar days after receipt of such notice within which to cure the violation, or within which to present a plan, satisfactory to the City Commission, to accomplish the same.

132.16 (C)(1) In the event the City Commission terminates the registration, the Registrant shall, within a reasonable time following such termination, provide an acceptable plan for transferring ownership of the communications facilities to another Person in accordance with this Chapter or shall remove or Abandon the facilities and take such steps as are necessary to render every portion of the facilities remaining In The Public Rights-Of-Way of the City safe. If the Registrant has either Abandoned its facilities or chooses to Abandon its facilities, the City may either:

132.16 (C)(1)(a) Require the Registrant or the registrant's bonding company to remove some or all of the facilities from the Public Rights-Of-Way and restore the Public Rights-Of-Way to its condition immediately prior to the removal;

132.16 (C)(1)(b) The City may require that some or all of the facilities be removed and the Public Rights-Of-Way restored to its such condition at the Registrant's expense, using City employees, agents or contractors, and charge any and all costs to the Registrant and require reimbursement, or

132.16 (C)(1)(c) Utilize or allow other Persons to utilize the Registrant's Abandoned facilities.

132.16 (C)(2) The obligations of the Registrant hereunder shall survive the termination of a registration. In the event of a declaration of termination of registration, this provision does not permit the City to cause the removal of any facilities that are used to provide another service for which the Registrant holds a valid certification or license with the governing federal or State agency, where required, and is properly registered with the City, for such certificated service, where required.

132.16 (D) A final order of the City imposed pursuant to Florida Statutes, and applicable provisions of this Chapter and the City Code, if any, shall constitute a lien on any property of the Owner and may be enforced as provided therein.

§ 132.17 TRANSFER OF CONTROL, SALE OR ASSIGNMENT OF ASSETS.

132.17 (A) ***Notification***. If a Registrant transfers, sells or assigns its registration or its facilities In The Public Rights-Of-Way, incident to a transfer, sale or assignment of the Registrant's assets, the transferee, buyer or assignee shall be obligated to comply with the terms of this Chapter. To the extent allowed by applicable Law, written notice of any such transfer, sale or assignment or transfer of ownership or control of a Registrant's business shall be provided to the City within 14 business days of the effective date of the transfer, sale or assignment. If the transferee, buyer or assignee is a current Registrant, then the transferee, buyer or assignee is not required to re-register. If the transferee, buyer or assignee is not a current Registrant, then the transferee, buyer or assignee shall register as provided in § 132.10 within 60 calendar days of the transfer, sale or assignment. if permit applications are pending in the Registrant's name, the transferee, buyer or assignee shall notify the appropriate City officials that the transferee, buyer or assignee is the new Applicant.

132.17 (B) ***Subordination***. Any mortgage, pledge, lease or other encumbrance on the Communications Facilities shall be subject and subordinate to the rights of the City under this Chapter and applicable Law.

§ 132.18 INDEMNIFICATION.

A Registrant shall, at its sole cost and expense, indemnify, hold harmless and defend the City, its officials, boards, members, agents and employees, against any and all claims, suits, causes of action, proceedings, judgments for damages or equitable relief, and costs and expenses incurred by the City arising out of the placement or maintenance of its communications system or facilities In Public Rights-Of-Way, regardless of whether the act or omission complained of is authorized, allowed or prohibited by this Chapter, provided, however, that a Registrant's obligation hereunder shall not extend to any damages caused by the negligence, gross negligence or wanton or willful acts of the City. This provision includes, but is not limited to, the City's reasonable attorneys' fees incurred in defending against any such claim, suit or proceedings. City agrees to notify the Registrant, in writing, within a reasonable time of City receiving notice, of any issue it determines may require indemnification. Nothing in this Section shall prohibit the City from participating in the defense of any litigation by its own counsel and at its own cost if in the City's reasonable belief there exists, or may exist, a conflict in representation, potential conflict or appearance of a conflict. Nothing contained in this Section shall be construed or interpreted:

132.18 (A) As denying to either party any remedy or defense available to such party under the Laws of the State of Florida;

132.18 (B) As consent by the City to be sued; or

132.18 (C) As a waiver of sovereign immunity beyond the waiver provided in Florida Statutes § 768.28.

§ 132.19 INSURANCE.

The City shall not approve a registration until and unless the City obtains assurance that such Registrant (and those acting on its behalf) have adequate insurance. At a minimum, the following requirements must be satisfied:

132.19 (A) The policies of insurance shall be primary and written on forms acceptable to the City and placed with insurance carriers approved and licensed by the Insurance Department in the State of Florida and meet a minimum financial AM Best Company rating of no less than "A-Excellent: FSC VII." In the event that the insurance carrier's rating shall drop, the insurance carrier shall immediately notify the City. No changes shall be made to these specifications without prior written specific approval by the City.

132.19 (B) The City of Weston, Calvin Giordano & Associates, Inc., Weiss Serota Helfman Pastoriza Cole & Boniske, P.L., and Municipal Technologies, LLC, shall be named as additional insured, as their interests may appear on all policies except workers' compensation. As respects general liability coverage, the completed operations coverage and the additional insured status of the City must be maintained for this project for not less than five years following completion and acceptance by the City or no more restrictive than ISO form CG 20 37 (07 04). Waiver of subrogation in favor of the City of Weston is required on all policies except workers' compensation.

132.19 (C) Registrant shall provide statutory workers' compensation, and employer's liability insurance with limits of not less than $1,000,000 per employee per accident, $1,000,000 disease aggregate and $1,000,000 per employee per disease for all personnel on the worksite. If applicable, coverage for the Jones Act and US Longshoremen and Harborworkers Exposures must also be included. (Elective exemptions will NOT satisfy this requirement. Certificates evidencing an employee leasing company as employer will not be accepted).

132.19 (D) In the event the Registrant has "leased" employees, the Registrant or the employee leasing company must provide evidence of a workers' compensation policy for all personnel on the worksite. All documentation must be provided for review and approval by the City. The Registrant is responsible for the workers' compensation of any and all subcontractors used by the Registrant. Evidence of workers' compensation insurance coverage for all subcontractors must be submitted prior to any work being performed.

132.19 (E) Commercial general liability: Including but not limited to bodily injury, property damage, contractual liability, products and completed operations (without limitation), watercraft or aircraft liability if those vehicles will be utilized, and personal injury liability with limits of not less than $2,000,000 each occurrence, covering all work performed under this contract.

132.19 (F) Business automobile liability: Registrant agrees to maintain business automobile liability at a limit of liability not less than $1,000,000 each occurrence covering all work performed under this Chapter.

132.19 (G) Registrant further agrees coverage shall include liability for owned, non-owned and hired automobiles. In the event Registrant does not own automobiles, Registrant agrees to maintain coverage for hired and non-owned auto liability, which may be satisfied by way of endorsement to the commercial general liability policy or separate business auto liability policy. If private passenger automobiles are used in the business, they must be commercially insured.

132.19 (H) Umbrella liability: Umbrella polices are acceptable to provide the total required liability limits.

132.19 (I) Self-insurance: Registrant may satisfy the insurance requirements and conditions of this Section under a self-insurance plan and/or retention. Registrant agrees to notify the City, and/or indicate on the certificate(s) of insurance, when self-insurance is relied upon or when a self-insured retention exceeds $100,000. The City reserves the right, but not the obligation, to request and review a copy of the Registrant's most recent annual report or audited financial statement, which the Registrant agrees to furnish for the purpose of determining the Registrant's financial capacity to self-insure.

132.19 (J) The rights reserved by the City with respect to any security fund or bond established pursuant to this Section are in addition to all other rights and remedies the City may have under this Chapter, a lease, or at Law or equity.

132.19 (K) Any Person, firm or corporation who knowingly breaches any provision of this Chapter shall upon receipt of written notice from the City be given a time schedule to cure the violation. Failure to commence to cure the violation within 30 calendar days and to complete cure, to the City's satisfaction, within 60 calendar days, or such longer time as the City may specify, shall result in revocation of any permit or license and the City shall seek any remedy or damages to the full extent of the Law. This shall not preclude other penalties allowed by Law.

§ 132.20 CONSTRUCTION BOND.

132.20 (A) Prior to performing any major Construction work In The Public Rights-Of-Way, the City may require the Registrant to establish in the City's favor a construction bond to secure the Restoration of the Public Rights-Of-Way and to ensure the Registrant's faithful performance of the Construction or other work In The Public Rights-Of-Way, in accordance with applicable sections of the City Code. Notwithstanding the foregoing, a Construction bond hereunder shalt only be required to the extent that the cost of the Restoration exceeds the amount recoverable against the security fund as provided in § 132.21.

132.20 (B) In the event a Registrant subject to such a Construction bond fails to complete the work in accordance with the provisions of the permit and this Chapter, there shall be recoverable, jointly and severally from the principal and surety of the bond, any damages or loss suffered by the City as a result, including the full amount of any compensation, indemnification or cost of removal or Abandonment of any property of the Registrant, or the cost of completing the work, plus a reasonable allowance for attorney's fees, up to the full amount of the bond.

132.20 (C) No less than 12 months after completion of the Construction and satisfaction of all obligations in accordance with the bond, the Registrant may request the City Manager to remove the requirement to continue the Construction bond and the City shall release the bond within 10 calendar days. Notwithstanding, the City may require a new bond for any subsequent work performed In The Public Rights-Of-Way.

132.20 (D) The construction bond shall be issued by a surety having a minimum rating of A-1 in Best's Key Rating Guide, Property/Casualty Edition; shall be subject to the approval of the City Attorney; and shall provide that:

"Unless released by the City, this bond may not be canceled, or allowed to lapse, until 60 calendar days after receipt by the City, by certified mail, return receipt requested, of a written notice from the issuer of the bond of intent to cancel or not to renew."

132.20 (E) The rights reserved by the City with respect to any Construction bond established pursuant to this Section are in addition to all other rights and remedies the City may have under this Section, or at Law or equity, and no action, proceeding or exercise of a right with respect to the construction bond will affect any other right the City may have.

§ 132.21 SECURITY FUND.

At the time of registration and as a condition of receiving its first permit to place or maintain a Communications Facility In Public Rights-Of-Way the Registrant shall be required to file with the City, for City approval, an annual bond, cash deposit or irrevocable letter of credit in the sum of $50,000 having as a surety a company qualified to do business in the State of Florida, and acceptable to the City Manager, which shall be referred to as the "security fund." The security fund shall be conditioned on the full and faithful performance by the registrant of all requirements, duties and obligations imposed upon Registrant by the provisions of this Chapter. The bond or guarantee shall be furnished annually or as frequently as necessary to provide a continuing guarantee of the Registrant's full and faithful performance at all times. In the event a Registrant fails to perform its duties and obligations imposed upon the Registrant by the provisions of this Chapter, subject to § 132.25, there shall be recoverable, jointly and severally from the security fund and/or from the principal and surety of the bond, any damages or loss suffered by the City as a result, including the full amount of any compensation, indemnification or cost of removal or Abandonment of any property of the Registrant, plus a reasonable allowance for attorneys' fees, up to the full amount of the security fund, the City may in its reasonable discretion accept a corporate guarantee of the Registrant or its parent company.

§ 132.22 REPORTS AND RECORDS; INSPECTIONS.

132.22 (A) ***Registrant records***. A Registrant shall provide the following documents to the City as received or filed:

132.22 (A)(1) Upon reasonable request, any pleadings, petitions, notices, and documents, which may directly impact the obligations under this Chapter and which are reasonably necessary for the City to protect its interests under this Chapter.

132.22 (A)(2) Any request for protection under bankruptcy Laws, or any judgment related to a declaration of bankruptcy.

132.22 (B) ***No effect on remedies***. Nothing in this subsection shall affect the remedies Registrant has available under applicable Law.

132.22 (C) ***Inspections***. In addition, the City may, at its option, and upon reasonable notice to the Registrant, inspect the facilities In The Public Rights-Of-Way and schematics indicating the location of its facilities for a specific site to ensure the safety of its residents.

132.22 (D) ***Confidentiality of records***. The City shall keep any documentation, books and records of the Registrant confidential to the extent required under Florida Statutes.

§ 132.23 ABANDONMENT OF A COMMUNICATIONS FACILITY.

132.23 (A) ***Duty to notify City***. Upon Abandonment of a Communications Facility owned by a Registrant In The Public Rights-Of-Way, the Registrant shall notify the City of such Abandonment within 90 calendar days.

132.23 (B) ***Notice to remove Abandoned facilities***. The City may direct the Registrant by written notice to remove all or any portion of such Abandoned facility at the Registrant's sole expense if the City determines that the Abandoned facility's presence interferes with the public health, safety or welfare, which shall include, but shall not be limited to, a determination that such facility:

132.23 (B)(1) Compromises safety at any time for any Public Rights-Of-Way user or during Construction or maintenance In Public Rights-Of-Way;

132.23 (B)(2) Prevents another Person from locating facilities in the area of Public Rights-Of-Way where the Abandoned facility is located when other alternative locations are not reasonably available; or

132.23 (B)(3) Creates a maintenance condition that is disruptive to the Public Rights-Of Way's use.

132.23 (B)(4) In the event of subsection (2) above, the City may require the third Person to coordinate with the Registrant that owns the existing facility for joint removal and placement, where agreed to by the Registrant.

132.23 (C) ***Consent to remove Abandoned facilities***. In the event that the City does not direct the removal of the Abandoned facility, the Registrant, by its notice of Abandonment to the City shall be deemed to consent to the alteration or removal of all or any portion of the facility by the City or another Person at such third party's cost.

132.23 (D) ***Failure to remove facilities***. If the Registrant fails to remove all or any portion of an Abandoned facility as directed by the City within a reasonable time period as may be required by the City under the circumstances, the City may perform such removal and charge the cost of the removal against the Registrant.

§ 132.24 ADMINISTRATION.

132.24 (A) The City Manager shall have the responsibility for overseeing the day-to-day administration of this Chapter. The City Manager shall be empowered to take all administrative actions on behalf of the City, except for those actions specified in this Chapter that are reserved to the City Commission.

132.24 (B) The City Manager shall provide the Commission with assistance, advice and recommendations as appropriate and may recommend that the Commission take certain actions with respect to the Registrant.

§ 132.25 ENFORCEMENT REMEDIES.

132.25 (A) ***Violations***. In addition to any other remedies available at Law, including but not limited to Florida Statutes § 166.0415 and Ch. 162, or equity or provided in this Chapter, the City may apply any one or combination of the following remedies in the event a Registrant violates this Chapter, or applicable local Law or order related to the Public Rights-Of-Way:

132.25 (A)(1) Failure to comply with the provisions of the Chapter or other Law applicable to occupants of the Public Rights-Of-Way may result in imposition of penalties to be paid by the Registrant to the City as provided in Florida Statutes Chapter 162 and Chapter 31of the City Code.

132.25 (A)(2) In addition to or instead of any other remedy, the City may seek legal or equitable relief from any court of competent jurisdiction.

132.25 (B) ***No waiver***. Failure of the City to enforce any requirements of this Chapter shall not constitute a waiver of the City's right to enforce that violation or subsequent violations of the same type or to seek appropriate enforcement remedies.

§ 132.26 FORCE MAJEURE.

In the event a Registrant's performance of or compliance with any of the provisions of this Chapter is prevented by a cause or event not within the Registrant's control, such inability to perform or comply shall be deemed excused and no, penalties or sanctions shall be imposed as a result, provided, however, that such Registrant uses all practicable means to expeditiously cure or correct any such inability to perform or comply. For purposes of this Chapter, causes or events not within a registrant's control shall include, without limitation, acts of God, floods, earthquakes, landslides, hurricanes, fires and other natural disasters, acts of public enemies, riots or civil disturbances, sabotage, strikes and restraints imposed by order of a governmental agency or court. Causes or events within registrant's control, and thus not falling within this Section, shall include, without limitation, Registrant's financial inability to perform or comply, economic hardship, and misfeasance, malfeasance or nonfeasance by any of Registrant's directors, officers, employees, contractors or agents.

§ 132.27 RESERVATION OF RIGHTS.

132.27 (A) The City reserves the right to amend this Chapter as it shall find necessary in the lawful exercise of its police powers.

132.27 (B) This Chapter shall apply to all existing Communications Facilities placed In The Public Rights-Of-Way prior to February 17, 2009, to the full extent permitted by State and federal Law.

CHAPTER 133. WIRELESS TELECOMMUNICATIONS FACILITIES.

§ 133.01 INTENT.

The regulations and requirements establish general guidelines for the siting of wireless Telecommunications Towers and Antennas and are intended to accomplish the following purposes:

133.01 (A) Protect and promote the public health, safety and general welfare of the residents of the City;

133.01 (B) Minimize residential areas and land uses from potential adverse impacts of Towers and Antennas;

133.01 (C) Encourage the location of Towers in non-residential areas and to locate them, to the extent possible, in areas where the adverse impact on the community is minimal;

133.01 (D) Minimize the total number of Towers throughout the community by strongly encouraging the Collocation of Antennas on new and Pre-Existing Tower sites as a primary option rather than Construction of additional single-use Telecommunications Towers;

133.01 (E) Encourage users of Telecommunications Towers and Antennas to configure them in a way that minimizes the adverse visual impact of the Telecommunications Towers and Antennas through careful design, siting, Landscape screening, and innovative camouflaging techniques;

133.01 (F) Minimize potential damage to property from Telecommunications Towers and Wireless Communications Facilities by requiring such Structures be soundly designed, constructed, modified and maintained; and

133.01 (G) Enhance the ability of the providers of Wireless Communications Services to provide such services to the community through an efficient and timely application process. In furtherance of these goals, the City shall at all times give due consideration to the City's comprehensive plan, zoning map, existing land uses, and environmentally sensitive areas, in approving sites for the location of Telecommunications Towers and Antennas.

§ 133.02 APPLICABILITY.

133.02 (A) ***New Communications Facilities and modifications to existing facilities***. All new Wireless Communications Facilities and reconstruction or modifications to existing Wireless Communications Facilities in the City shall be subject to the regulations in this Chapter to the full extent permitted under applicable State and federal Law.

133.02 (B) ***Pre-Existing Telecommunications Towers or* Antennas**. Pre-Existing Telecommunications Towers or Antennas shall not be required to meet the requirements of this Chapter, other than the specific requirements set forth herein.

133.02 (C) ***Broadcasting facilities/amateur radio station operators/receive only* Antennas**. This Chapter shall not govern any Broadcasting Facility or a Wireless Communications

Facility owned and operated by a federally-licensed amateur radio station operator or is used exclusively for receive only Antennas.

133.02 (D) ***Pending applications***. This Chapter shall apply to applications for Wireless Communications Facilities, Telecommunications Towers, and Antennas as defined herein unless prohibited by applicable Law.

133.02 (E) ***Not essential services***. The providing of Personal Wireless Services and the siting and construction of Wireless Communications Facilities shall be regulated and permitted pursuant to this Chapter and shall not be regulated or permitted as Essential Services or Public Safety Communications.

133.02 (F) ***Administration***. Except for matters herein specifically reserved to the City Commission, the City Manager shall be the principal City official responsible for the administration of this Chapter.

133.02 (G) ***AM Array***. For purposes of implementing this Chapter, an AM Array, consisting of one or more Tower units and supporting ground system which functions as one AM broadcasting Antenna, shall be considered one Tower. Measurements for setbacks and separation distances shall be measured from the outer perimeter of the Towers included in the AM Array. Additional Tower units may be added within the perimeter of the AM Array by right.

133.02 (H) ***Application required***. An Applicant must submit an application form for a Person to apply for the Construction, installation, or placement of a Wireless Communications Facility, Telecommunications Tower, or Antenna within the City consistent with the terms of this Chapter. The City may create a different application form for Collocation applications.

§ 133.03 APPLICATION REQUIREMENTS FOR WIRELESS COMMUNICATIONS FACILITIES.

133.03 (A) ***Permit required***. Unless exempted from these requirements as set forth below, or as otherwise required by State or federal law, permits shall be required for the installation of Wireless Communications Facilities, including Telecommunications Towers and Antennas , by application submitted to the City.

133.03 (B) ***Application requirements***. In addition to the submission requirements for an application for site plan approval provided by §125.41of the City Code, the following information must be included in all applications, including applications for installations of Telecommunications Towers and Antennas but excluding Collocation applications:

133.03 (B)(1) Current survey of the property.

133.03 (B)(2) Description of the wireless Communications Services currently provided and/or to be provided in the future by the Applicant over its Wireless Communications Facilities.

133.03 (B)(3) Location of the proposed facilities.

133.03 (B)(4) Identify the location of all overhead and underground public utilities; Telecommunication, irrigation, cable, water, sewer, drainage, municipal fiber optic equipment and other facilities.

133.03 (B)(5) Identify the Trees, Structures, improvements, facilities and obstructions, if any, that Applicant proposes to temporarily or permanently remove or relocate.

133.03 (B)(6) Identify all applicable FCC licenses and approvals.

133.03 (B)(7) Statement that Applicant shall notify all other Telecommunication providers of the permit application at time application is accepted by the City.

133.03 (B)(8) Any application submitted to the City for construction or installation of a Telecommunication Tower or Wireless Communications Facility shall demonstrate that the proposed Structure conforms with the State Of The Art or, alternatively, that State Of The Art technology is unsuitable for the site involved. Costs of State Of The Art technology that exceed new Tower Development shall not be presumed to render the technology unsuitable.

133.03 (B)(9) Lot size. For purposes of determining whether the installation of a Telecommunications Tower or Antenna complies with the zoning provisions, including, but not limited to, setback requirements, Lot coverage requirements, and other such requirements, the dimensions of the entire Lot shall control, even though the Antenna or Telecommunications Tower may be located on leased parcels within such Lot.

133.03 (B)(10) An inventory of existing sites. Each Applicant shall provide the City with an inventory of its Pre-Existing Telecommunications Towers and Antennas, and the pre-existing sites of any other Telecommunications Towers, Antennas and Wireless Communications Facilities within a three mile radius of the City.

133.03 (B)(11) For applications for new Telecommunications Towers, the Applicant must provide information to demonstrate, pursuant to the procedures listed within this subsection, that no Pre-Existing Tower, existing Structure, or State Of The Art technology that does not require the Use of new Telecommunications Towers or new Structures, can accommodate or be modified to accommodate the Applicant's proposed Telecommunications Tower. Evidence submitted to demonstrate that no Pre-Existing Tower, Existing Structure or State Of The Art technology is suitable may consist of an affidavit from an Engineer licensed to practice in the State of Florida or by an Engineer exempt from such requirement under Florida Law, and with experience with radio frequency and Wireless Communications Facilities, determining or demonstrating the following:

133.03 (B)(11)(a) That Pre-Existing Towers or existing Structures located within the Geographic Search Area do not have the capacity to provide reasonable technical service consistent with the applicant's technical system, including but not limited to, applicable FCC requirements.

133.03 (B)(11)(b) That Pre-Existing Towers or Existing Structures are not of sufficient height to meet applicable FCC requirements, or engineering requirements of the Applicant.

133.03 (B)(11)(c) That Pre-Existing Towers or Existing Structures do not have sufficient structural strength or capacity to support applicant's proposed Antenna and related equipment, or a replacement Tower is not economically feasible.

133.03 (B)(11)(d) That the Applicant's proposed Antenna would cause electromagnetic/radio frequency interference with Antennas on Pre-Existing Towers, Antennas or Existing Structures, or the Antenna on the pre-existing Towers or Structures would cause interference with the applicant's proposed Antenna.

133.03 (B)(11)(e) That the Applicant's proposed Antenna on a Pre-Existing Tower or Existing Structure would cause interference with Public Safety Communications.

133.03 (B)(11)(f) That the Applicant made diligent efforts but was unable to obtain permission to install or collocate the Applicant's Wireless Communications Facilities on pre-existing Towers or usable Antenna support located within a one mile radius from the proposed site.

133.03 (B)(11)(g) That there are other limiting factors that render Pre-Existing Towers and Existing Structures unsuitable.

133.03 (B)(12) The engineering report.

133.03 (B)(13) If applicable, a copy of the executed lease agreement of the property where the Wireless Communications Facility and/or Tower will be located.

133.03 (B)(14) Additional information that the City may request consistent with this Chapter and applicable Law to process the application. In the event the City requests any additional information, the time in which an application is processed shall be tolled pending receipt and further evaluation.

133.03 (B)(15) ***Consultant fee***. The City shall have the right to retain independent technical consultants and experts that it deems necessary to properly evaluate applications for individual Towers. The consultant fee shall be based upon the hourly rate of the independent technical consultant or expert the City deems necessary to properly evaluate applications for Tower. The consultant fee shall be applied to those applications requiring special review or evaluation. The consultant fee shall be reimbursed by Applicant to the City prior to issuance of any permits.

133.03 (B)(16) To the extent not prohibited by applicable law, any application for a Wireless Communications Facility shall also include:

133.03 (B)(16)(a) A certification from an Engineer licensed to practice in the State of Florida or by an Engineer exempt from such requirement under Florida law, and with experience with radio frequency and Wireless Communications Facilities that the proposed facility including reception and transmission functions, is not expected to interfere with or obstruct transmission to and from existing Public Safety Communications facilities;

133.03 (B)(16)(b) A remedial action plan, subject to the City's approval, that includes, but is not limited to, procedures to rectify any interference or obstruction with Public Safety Communications, its plans to make all necessary repairs and/or accommodations to alleviate the interference or obstruction, and a period of compliance.

133.03 (B)(17) If the Applicant seeks relief from any regulation contained herein, the Applicant shall provide the nature of the specific relief sought and the engineering justification to demonstrate that without such relief, applicability of the regulation would have the effect of prohibiting the provision of Personal Wireless Services.

133.03 (C) ***Engineering report.*** The engineering report shall be from an Engineer licensed to practice in the State of Florida or by an Engineer exempt from such requirement under Florida law, and with experience with radio frequency and Wireless Communications Facilities, and shall include:

133.03 (C)(1) A site Development Plan of the entire subject property drawn to scale, including, without limitation:

133.03 (C)(1)(a) A tax parcel number, legal description of the parent tract and leased parcel, total acres, and section/township/range of the subject property;

133.03 (C)(1)(b) The lease parcel fully dimensioned, including property lines, setbacks, roads on or adjacent to the subject property, easements;

133.03 (C)(1)(c) Outline of all existing Buildings, including purpose (i.e. residential Buildings, garages, Accessory Structures, etc.) on subject property;

133.03 (C)(1)(d) All existing vegetation, by mass or individually by diameter, measured for feet from the ground of each stand-alone Tree on the subject property;

133.03 (C)(1)(e) Proposed/existing security barrier, indicating type and extent as well as point of controlled entry;

133.03 (C)(1)(f) Proposed/existing access easements, Utility easements, and parking for the Telecommunications Tower;

133.03 (C)(1)(g) All proposed changes to the subject property, including grading, vegetation removal, temporary or permanent roads and driveways, Storm Water management facilities and any other construction or Development attendant to the Telecommunications Tower;

133.03 (C)(1)(h) Scaled elevation drawing of proposed Telecommunications Tower, including location of all mounts, Antennas, Equipment Facilities, fencing and Landscaping;

133.03 (C)(1)(i) If applicable, On-Site and adjacent land uses.

133.03 (C)(2) If applicable, a narrative of why the proposed Telecommunications Tower cannot comply with the requirements of the engineering report.

133.03 (C)(3) The type of Telecommunications Tower and specifics of design including, if appropriate, the following:

133.03 (C)(3)(a) Equipment brochures for the proposed Tower such as manufacturer's specifications or trade journal reprints. These shall be provided for the Antennas, mounts, Equipment Facilities, cables as well as cable runs, and security barrier, if any;

133.03 (C)(3)(b) Materials of the proposed Tower specified by generic type and specific treatment (i.e., anodized aluminum, stained wood, painted fiberglass, etc.). These shall be provided for the Antennas, mounts, Equipment Facilities, cables as well as cable runs, and security barrier, if any;

133.03 (C)(3)(c) Colors of the proposed Tower represented by a color board showing actual colors proposed. Colors shall be provided for the Antennas, mounts, Equipment Facilities, cables as well as cable runs, and security barrier, if any;

133.03 (C)(3)(d) Dimensions of the Tower specified for all three directions: height, width and breadth. These shall be provided for the Antennas, mounts, Equipment Facilities and security barrier, if any; and

133.03 (C)(3)(e) A visual impact analysis, with a minimum of two photo digitalization or photographic superimpositions of the Tower within the subject property. The photo digitalization or photographic superimpositions shall be provided for all attachments, including: the Antennas, mounts, Equipment Facilities, cables as well as cable runs, and security barrier, if any for the total height, width and breadth, as well as at a distance of 250 feet and 500 feet from all properties within that range, or at other points agreed upon in a pre-application conference.

133.03 (C)(4) Current wind-loading capacity and a projection of wind-loading capacity using different types of Antennas as contemplated by the Applicant. No Telecommunications Tower shall be permitted to have its wind loading capacity lower than as provided for by the Florida Building Code.

133.03 (C)(5) An affidavit from Florida registered professional Engineer or by an Engineer exempt from such requirement under Florida Law, and with experience with radio frequency and Wireless Communications Facilities stating that the proposed Telecommunications Tower, including reception and transmission functions, will not interfere with the visual and customary transmission or reception of radio, television or similar services as well as other wireless services enjoyed by adjacent residential and non-residential properties.

133.03 (C)(6) An affidavit from an Engineer licensed to practice in the State of Florida or by an Engineer exempt from such requirement under Florida Law, and with experience with radio frequency and Wireless Communications Facilities stating confirming compliance with all applicable Building codes, associated regulations and safety standards. For all Towers attached to Existing Structures, the statement shall include certification that the Structure can support the load superimposed from the Telecommunications Tower.

§ 133.04 APPLICATION REQUIREMENTS FOR COLLOCATIONS.

The following information must be included in all Collocation applications.

133.04 (A) An engineering report, from an Engineer licensed to practice in the State of Florida or by an Engineer exempt from such requirement under Florida Law, and with experience with radio frequency and Wireless Communications Facilities, that shall include:

133.04 (A)(1) A statement of compliance with this Chapter and all applicable Building codes, associated regulations and safety standards as provided herein. The statement shall include certification that the Existing Structure can support the load superimposed from the Antenna(s).

133.04 (A)(2) The type of Antenna and specifics of design including, if appropriate, the following:

133.04 (A)(2)(a) Equipment brochures for the proposed Antenna such as manufacturer's specifications or trade journal reprints. These shall be provided for the Antennas, mounts, Equipment Facilities, cables as well as cable runs, and security barrier, if any;

133.04 (A)(2)(b) Materials of the proposed Antenna specified by generic type and specific treatment (i.e., anodized aluminum, stained wood, painted fiberglass, etc.). These shall be provided for the Antennas, mounts, Equipment Facilities, cables as well as cable runs, and security barrier, if any;

133.04 (A)(2)(c) Colors of the proposed Antenna represented by a color board showing actual colors proposed. Colors shall be provided for the Antennas, mounts, Equipment Facilities, cables as well as cable runs, and security barrier, if any;

133.04 (A)(2)(d) Dimensions of the proposed Antenna specified for all three directions: height, width and breadth. These shall be provided for the Antennas, mounts, Equipment Facilities and security barrier, if any; and

133.04 (A)(2)(e) A visual impact analysis, with a minimum of two photo digitalization or photographic superimpositions of the Pre-Existing Tower and proposed Antenna within the subject property. The photo digitalization or photographic superimpositions shall be provided for all attachments, including: the Antennas, mounts, Equipment Facilities, cables as well as cable runs, and security barrier, if any for the total height, width and breadth, as well as at a distance of 250 feet and 500 feet from all properties within that range, or at other points agreed upon in a pre-application conference.

133.04 (A)(3) Current wind-loading capacity and a projection of wind-loading capacity using different types of Antennas as contemplated by the Applicant. No Telecommunications Tower shall be permitted to have its wind loading capacity lower than as provided for by the Florida Building Code.

133.04 (A)(4) A certification that the proposed Antenna, including reception and transmission functions, is not expected to interfere with or obstruct transmission to and from existing Public Safety Communications facilities or any other Wireless Communications services;

133.04 (A)(5) A description of the geographical service area requirements; and

133.04 (A)(6) If necessary, a remedial action plan, subject to the City's approval, that includes, but is not limited to, procedures to rectify any interference or obstruction with Public Safety Communications, its plans to make all necessary repairs and/or accommodations to alleviate the Interference or obstruction, and a period of compliance.

133.04 (B) An inventory of existing sites. Each Applicant shall provide the City with an inventory of its Pre-Existing Telecommunications Towers and Antennas, and the pre-existing sites of any other Telecommunications Towers, Antennas and Wireless Communications Facilities within a three mile radius of the City.

133.04 (C) A copy of the executed lease agreement of the Tower where the Wireless Communications Facility and/or Antenna will be collocated; and

133.04 (D) Additional information that the City may request consistent with this Chapter and applicable Law to process the application. In the event the City requests any additional information, the time in which an application is processed shall be tolled pending receipt and further evaluation.

§ 133.05 INSTALLATIONS ON MUNICIPAL PROPERTY.

133.05 (A) Applications for a Wireless Communications Facility on property owned, leased or otherwise controlled by the City, except for Public Rights-Of Way, shall require a lease agreement approved by the City Commission and executed by the City and the Owner of the proposed Wireless Communications Facility. The City may require, as a condition of entering into a lease agreement, the dedication of space on the facility for Public Safety Communications purposes, as well as property improvement on the leased space. Any dedications and improvements shall be negotiated prior to execution of the lease.

133.05 (B) No lease granted pursuant to this Chapter shall convey the exclusive right, privilege, permit or Franchise to occupy or to use the public lands of the City for delivery of Personal Wireless Services or any other purpose.

133.05 (C) No lease granted pursuant to this Chapter shall convey any right, title or interest in the public lands other than a leasehold interest, and shall be deemed only to allow the use of the public lands for the limited purposes and term stated in the lease. No lease shall be construed as a conveyance of a title interest in the property.

133.05 (D) Any and all Collocations or placements of Antennas on a Wireless Communications Facility that is located on property owned, leased or otherwise controlled by the City, except for Public Rights-Of Way, shall require a separate lease agreement with the City as well

as full compliance with the requirements of this Chapter for such Collocations and placements of Antennas.

133.05 (E) Pursuant to applicable Law, the City may contract with a third party to administer City-owned property for purposes of developing City-owned sites, consistent with the terms of this Chapter. Except as specifically provided herein, the terms of this Chapter, and the requirements established thereby, shall be applicable to all Telecommunication Towers or Personal Wireless Service facilities to be developed or collocated on City-owned sites.

§ 133.06 APPLICATION FEES AND PROCESS.

133.06 (A) ***Filing fee.*** All applications shall be accompanied by the applicable non-refundable filing fee, which shall be adopted by resolution of the City Commission.

133.06 (B) Applicants regulated by this Chapter may request a pre-application conference with the City. Such request shall be submitted with a non-refundable fee in an amount set by City resolution to reimburse the City for the cost and fees incurred by the conference.

133.06 (C) Unless otherwise authorized by State or federal Law, no Person shall construct, install or maintain a Wireless Communications Facility within the City without the City's approval pursuant to this Chapter.

133.06 (D) The City Manager shall review the application for consistency with the City's Comprehensive Master Development Plan, land development regulations including this Chapter, and compatibility of the proposed Wireless Communications Facility with the surrounding neighborhood. For applications that are not subject to the City Commission's approval pursuant to this Chapter, the City Manager shall issue a written decision either granting or denying an application. The City Manager shall not grant an application for a proposed Wireless Communications Facility that will interfere with any Public Safety Communications, or is otherwise not in compliance with this Chapter. In the event the City Manager denies an application, the City Manager shall set forth the reasons for denial in writing.

133.06 (E) ***Notification of completeness.*** The City Manager shall notify the Applicant within 20 days after the date the application is submitted as to whether the application is, for administrative purposes only, properly completed and has been properly submitted in accordance with the requirements set forth above. However, such determination shall not be deemed as an approval of the application. Such notification shall indicate with specificity any deficiencies which, if cured, could make the application properly completed.

133.06 (F) In the event that the City Manager determines that a proposed Wireless Communications Facility subject to the City Commission's approval is not in compliance with this Chapter, the City Manager shall recommend that the City Commission deny the application and shall set forth the reasons for denial in writing.

133.06 (G) The City Commission shall consider the application, the City Manager's recommendation, and any additional evidence presented by the Applicant, City staff and the public.

133.06 (H) Any decision of the City Commission to deny an application shall authorize the City Manager to set forth in writing the City Commission's reasons for the denial. It is the intent of this Section to establish a procedure for compliance with the "written decision" and "substantial evidence" requirements of the Telecommunications Act, 47 USC § 332(c)(7)(B)(iii).

133.06 (I) The City shall grant or deny each properly completed application for a Collocation based on the application's compliance with this Chapter, City Code and any other applicable regulations, and within the normal time frame for a similar Building Permit review but in no case later than 45 business days after the date the application is determined to be properly completed. This time frame shall not apply to an application for Collocation on City-owned property.

133.06 (J) The City shall grant or deny each properly completed application for any other Wireless Communications Facility based on the application's compliance with this Chapter and any other applicable law, including but not limited to the City Code and within the normal time frame for a similar type of review, but in no case later than 90 business days after the date the application is determined to be properly completed. This time frame shall not apply to an application for Wireless Communications Facilities on City-owned property.

133.06 (K) An application is deemed submitted or resubmitted on the date the application is received by the City. If the City does not notify the Applicant in writing that the application is not completed in compliance with the City's regulations within 20 business days after the date the application is initially submitted or additional information resubmitted, the application is deemed, for administrative purposes only, to be properly completed and properly submitted. However, the determination shall not be deemed as an approval of the application. If the application is not completed in compliance with the City's regulations, the City shall so notify the Applicant in writing indicating with specificity any deficiencies in the required documents or deficiencies in the content of the required documents which, if cured, make the application properly completed. Upon resubmission of information to cure the stated deficiencies, the City shall notify the applicant, in writing, within the normal time frames of review, but in no case longer than 20 business days after the additional information is submitted, of any remaining deficiencies that must be cured. However, if Applicant does not cure the application deficiencies within 20 business days after receiving the notice of deficiencies, the application shall be considered withdrawn or closed.

133.06 (L) The time frames specified in this Section may be extended because the City's procedures generally applicable to all other similar types of applications require action by the City Commission and/or development review staff and such action has not taken place within the specified time frames. Under such circumstances, the City Commission shall either grant or deny the application at its next regularly scheduled meeting.

133.06 (M) The City may request, but not require, a waiver of the time frames by the Applicant, except that, with respect to a specific application the City may require a one-time waiver in the case of a declared local, state, or federal Emergency that directly affects the administration of all permitting activities of the City.

133.06 (N) The City may enter into an entry and testing agreement with the Wireless Communications Facility owner, Applicant and/or operator, in a form approved by the City Attorney, without approval of the City Commission.

133.06 (O) ***Extension and waiver.*** Where action by the City Commission or any other City agency is required on an application for a permit taken pursuant to this Section, the City Manager may by letter to the Applicant extend the time frame for a decision until the next available scheduled date of the Commission or agency as to whether to grant or deny an application for a permit taken pursuant to this Chapter. Notwithstanding the foregoing, the Applicant may voluntarily agree to waive the time frames set forth above.

133.06 (P) ***Emergency extension.*** The City may request a waiver of the time frames by the Applicant, except that, with respect to a specific application, a one-time waiver may be required in the case of a declared local, State, or federal Emergency that directly affects the administration of all permitting activities in the City.

133.06 (Q) ***Appeal.*** If an application is denied by the City Manager for noncompliance with the requirements of this Chapter then the Applicant may appeal this decision to the City Commission in accordance with the City Code. Any decision appealed from the City Commission may be appealed in accordance with applicable Law.

133.06 (R) ***Nonconforming Towers.*** Any Telecommunication Towers in existence in the City on February 17, 2009 that are nonconforming with the terms and provisions of this Section shall have until February 17, 2014 to bring said Tower into compliance, or upon the change of ownership of the leasehold interest upon which the Tower is located, whichever shall occur first.

§ 133.07 COLLOCATION.

133.07 (A) ***Intent.*** It is the intent of the City to encourage Collocation of Antennas on Existing Structures and Pre-Existing Towers. Except as provided herein, all Towers shall have the capacity to permit multiple users.

133.07 (B) ***Collocation incentive.*** To encourage such collocation, the City Manager may approve an application submitted to collocate Antennas on an Existing Structure, Pre-Existing Tower, or a Stealth facility, consistent with this Chapter. The specific Collocation applications indicated in the subsections below shall be subject to administrative approval.

133.07 (C) ***Exemptions for collocation.***

133.07 (C)(1) Any Antenna and related equipment to service the Antenna that is being collocated on an above ground Existing Structure is not subject to land development regulations of the City Code if the following criteria are met:

133.07 (C)(1)(a) The Existing Structure already contains an established Antenna and related equipment;

133.07 (C)(1)(b) The Existing Structure is not non-conforming and may pursuant to Florida Law be expanded; and

133.07 (C)(1)(c) The height of the Structure containing the Antenna and related equipment would not be increased by the addition of Antenna and related equipment.

133.07 (C)(2) Notwithstanding the exemption provided for in this Section, Construction of the Antenna and related equipment is subject to review by the City Manager and any other City department or agency for compliance with the City's design standards; and life safety codes, including but not limited to Building codes; conditions or requirements in any existing permits, agreements, or approvals. Moreover, this Section shall not relieve the permit holder for or Owner of the Existing Structure or property of compliance with any applicable condition or requirement of a permit, agreement, or land development regulation, including but not limited to any aesthetic requirements, or Law.

133.07 (D) ***Collocation applications requiring only City Manager approval***.

133.07 (D)(1) Collocations on Towers, including nonconforming Towers are subject to only Building Permit review, which may include a review for compliance with this Section, if they meet the following requirements:

133.07 (D)(1)(a) The Collocation does not increase the height;

133.07 (D)(1)(b) The Collocation does not increase the ground space area, commonly known as the compound, approved in the site plan for Equipment Facilities and ancillary facilities, except as allowed under this Chapter; and

133.07 (D)(1)(c) The Collocation consists of Antennas, Equipment Facilities, and ancillary facilities that are of a design and configuration consistent with all applicable regulations, restrictions, or conditions, if any, applied to the initial Antennas placed on the Tower and to its accompanying Equipment Facilities and ancillary facilities and, if applicable, applied to the Tower supporting the Antennas. Such regulations may include the design and aesthetic requirements, but not procedural requirements, other than those authorized by this Section, of the applicable land development regulations in effect at the time the initial Antennas placement was approved.

133.07 (D)(1)(d) Such Collocations are not subject to any design or placement requirements of land development regulations in effect at the time of the Collocation that are more restrictive than those in effect at the time of the initial Antennas placement approval, to any other portion of the land development regulations, or to public hearing review. Such Collocation applications are not subject to the City Commission's approval and shall be decided by the City Manager.

133.07 (E) ***Other Collocation applications requiring only City Manager approval.***

133.07 (E)(1) Except for a historic Building, Structure, site, object, or district, the following Collocation applications on all other Existing Structures shall also be subject to no more than a City Manager review if they meet the following requirements:

133.07 (E)(1)(a) The Collocation does not increase the height;

133.07 (E)(1)(b) The Collocation does not increase the ground space area, otherwise known as the compound, if any, approved in the site plan for equipment enclosures and ancillary facilities;

133.07 (E)(1)(c) The Collocation consists of Antennas, equipment enclosures, and ancillary facilities that are of a design and configuration consistent with any applicable structural or aesthetic design requirements and any requirements for location on the Structure, but not prohibitions or restrictions on the placement of additional Collocations on the Existing Structure or procedural requirements, other than those authorized by this Section of the Chapter at the time of the Collocation application; and

133.07 (E)(1)(d) The Collocation consists of Antennas, equipment enclosures, and ancillary facilities that are of a design and configuration consistent with all applicable restrictions or conditions, if any, that do not conflict with subsection (c) and were applied to the initial Antennas placed on the Structure and to its accompanying equipment enclosures and ancillary facilities and, if applicable, applied to the Structure supporting the Antennas.

133.07 (F) If only a portion of the Collocation does not meet the requirements of any of the above subsections, such as an increase in the height or a proposal to expand the ground space approved in the site plan for the equipment enclosure, where all other portions of the Collocation meet the requirements of this Subsection, that portion of the Collocation only may be reviewed by the City Commission. A Collocation proposal under this Subsection that increases the ground space area, otherwise known as the compound, approved in the original site plan for equipment facilities and ancillary facilities by the lesser of 400 or more square feet or 50% of the original compound size, shall, however, be reviewed as if it were a new Wireless Communications Facility.

133.07 (G) The replacement of or modification to a Wireless Communications Facility, except a Tower, that results in a Wireless Communications Facility not readily discernibly different in size, type, and appearance when viewed from ground level from surrounding properties, and the replacement or modification of equipment that is not visible from surrounding properties, all as reasonably determined by the City, shall be deemed an application for Collocation.

133.07 (H) The Owner of the Pre-Existing Tower on which the proposed Antennas are to be collocated shall remain responsible for compliance with any applicable condition or requirement of a permit or agreement, or any applicable condition or requirement of the land development regulations to which the Pre-Existing Tower must comply, including any aesthetic requirements, provided the condition or requirement is not inconsistent with this Section.

§ 133.08 INTERFERENCE WITH PUBLIC SAFETY COMMUNICATIONS.

To the extent not inconsistent with applicable federal Law, all providers of Personal Wireless Services and all Owners and/or operators of Wireless Communications Facilities, Towers, and Antenna s shall comply with the following:

133.08 (A) Any Wireless Communications Facility, Tower, or Antenna that causes interference with the operations of Public Safety Communications services, shall, after receiving notice, rectify the interference immediately or, to the extent not inconsistent with applicable Law, cease transmitting signals (go off the air) at once.

133.08 (B) In the event that the Wireless Communications Facility, Tower, or Antenna interferes with Public Safety Communications, it shall be the responsibility of the Owner and/or operator that creates the interference to make all necessary repairs and/or accommodations to alleviate the problem at its expense. The City shall be held harmless in this occurrence.

133.08 (C) In the event that a provider of Personal Wireless Services and/or an Owner and/or operator of Wireless Communications Facility, Tower, and/or Antenna interferes with Public Safety Communications, once it ceases transmission of signals (goes off the air) and rectifies the interference, it may not continue to resume providing Personal Wireless Services until it receives approval from the City.

133.08 (D) To the extent not inconsistent with applicable Law, if a provider of Personal Wireless Services or the Owner or operator of a Wireless Communications Facility, Tower or Antenna refuses to stop the interference or to cease transmitting signals as required herein, the City may file a complaint with the FCC for resolution and/or seek an injunction against it pursuant to Florida Statutes § 843.025 that makes it unlawful for any Person to deprive a Law Enforcement Officer of his or her radio or to otherwise deprive the Officer of the means to summon assistance, or pursue any other remedy authorized by applicable Law. Any Person who is found to have violated this Section shall be punished as provided by applicable Law.

§ 133.09 DEVELOPMENT, ZONING, BUILDING, AND INSPECTION REQUIREMENTS FOR WIRELESS COMMUNICATIONS FACILITIES.

133.09 (A) ***General regulations.*** The standards listed in this Section apply specifically to all Antennas, Towers and Wireless Communications Facilities, except those owned by the City, located on property owned, leased, or otherwise controlled and approved by the City or as otherwise specified herein. The City reserves the right to modify or waive the requirements for use on public property. The City shall not be required to provide access to City property.

133.09 (B) The construction, maintenance, operation and repair of Wireless Communications Facilities are subject to the regulatory supervision of the City to the full extent permitted by applicable Law, and shall be performed in compliance with all Laws, ordinances and practices affecting such facility including, but not limited to, zoning codes, Building codes, and safety codes, and as provided in this Chapter. The construction, maintenance, operation and repair shall be performed in a manner consistent with applicable industry standards, including the Electronic Industries Association.

133.09 (C) All Telecommunication Towers and Antennas must meet or exceed current standards and regulations of the FAA, the FCC, including emissions standards, and any other agency of the local, State or federal government with the authority to regulate Towers and Antennas prior to issuance of a Building Permit by the City. If such applicable standards and regulations are revised and require that existing facilities adhere to such revised standards, then the Owners of Telecommunications Towers and Antennas governed by this Chapter shall bring such Towers and

Antennas into compliance with such revised standards and regulations within 90 calendar days of the effective date of such standards and regulations, unless a different compliance schedule is mandated by the controlling State or federal agency. Failure to bring Towers and Antennas into compliance with such revised standards and regulations shall constitute grounds for the removal of the Telecommunications Tower, Antenna or Wireless Communications Facility at the Owner's expense.

133.09 (D) To ensure the structural integrity of Telecommunications Towers installed, the Owner shall construct and maintain the Telecommunications Tower in compliance with the Florida Building Code, and all other applicable codes and standards. A statement shall be submitted to the City by a Florida Registered Professional Engineer certifying compliance with this Section upon completion of construction and/or subsequent modification. Where an Existing Structure, including Poles, is requested as a Stealth facility, the facility, and all modifications thereof, shall comply with all requirements as provided in this Chapter and all other applicable standards. Following the issuance of a Building permit, the City shall require an analysis of a soil sample from the base of the Telecommunications Tower site.

133.09 (E) Telecommunications Towers, Wireless Communications Facilities and Antenna Owners shall submit an annual report to the City in September of each Year, including, but not limited to:

133.09 (E)(1) A summary of any and all complaints of interference with Public Safety Communications within the City that includes remedial measures that were taken to rectify or eliminate interference, and any other information which may be reasonably required to monitor the Telecommunication Towers and Antenna Owner's compliance with this Chapter; and

133.09 (E)(2) A certification of the Wireless Communications Facilities, Towers or Antenna's structural and electrical integrity.

133.09 (F) ***Inspections.***

133.09 (F)(1) The City reserves the right to conduct periodic inspection of Wireless Communications Facilities, Towers, and Antennas at the Owner's expense, to ensure structural and electrical integrity and compliance with this Chapter, the Florida Building Code, and other applicable codes and regulations.

133.09 (F)(2) The City may conduct more frequent inspections of Wireless Communications Facilities, Towers, or Antennas should there be an Emergency, Extraordinary Conditions or other reason to believe that the structural and electrical integrity of the Wireless Communications Facility, Tower, or Antenna is jeopardized.

133.09 (F)(3) If, upon inspection, the City concludes that a Wireless Communications Facility, Tower, or Antenna fails to comply with such codes and standards and constitutes a danger to persons or property, then upon notice being provided to the Owner, the Owner shall commence work within 30 calendar days to bring such Wireless Communications Facility, Tower, or Antenna into compliance with such standards. Failure to bring such

Wireless Communications Facility into compliance within 60 calendar days of notice shall constitute grounds for requiring the removal of the facility at the Owner's expense.

133.09 (F)(4) The City reserves the right to require additional inspections if there is evidence that a Tower or a Wireless Communications Facility has a safety problem or is exposed to Extraordinary Conditions.

133.09 (F)(5) Tower Owners shall also submit a report to the City certifying structural and electrical integrity of Towers every two Years. Towers shall also be inspected once every five Years by a Florida Registered Professional Engineer, at the Tower Owner's expense, and the results submitted to the City.

133.09 (F)(6) The report above shall be accompanied by a non-refundable fee to be established by City resolution to reimburse the City for the cost of review. Based upon the results of the inspection, the City may require repair or removal of a Wireless Communications Facility or Tower.

133.09 (G) ***Wireless Communications Facilities in Residential Areas.*** The City prohibits the placement of a Telecommunications Tower and Antennas in a Residential Area or residential zoning district unless the Applicant demonstrates to the satisfaction of the City that it cannot reasonably provide its Personal Wireless Service to the Residential Area or zone from outside the Residential Area or zone. In such a case, the City and the Applicant shall cooperate to determine an appropriate location for an Antenna of an appropriate design within the Residential Area or zone. The Applicant shall reimburse any and all reasonable costs and expenses incurred by the City for this cooperative determination, including attorney's fees. Such application for cooperation shall be accompanied by an application fee in the same amount as for a new Tower. The cooperation application shall not be subject to the time frames contained in this Chapter for granting and denying applications.

133.09 (H) ***Hierarchy of zoning districts and siting alternatives.*** Development of a Wireless Communications Facility shall be permitted in the following Preferred Zoning Districts and in accordance with the following siting alternatives hierarchies.

133.09 (H)(1) The Preferred Zoning Districts order of ranking is from highest (a) to lowest (g). Where a lower ranked alternative is proposed, the Applicant must demonstrate in its application that higher ranked options are not available. The availability of a less expensive lease on a lower ranked site is not sufficient in and of itself to justify using the lower ranked alternative where a higher ranked alterative is otherwise available.

133.09 (H)(1)(a) MU;

133.09 (H)(1)(b) CF;

133.09 (H)(1)(c) I-1, C-1, and O-1;

133.09 (H)(1)(d) PECD;

133.09 (H)(1)(e) AE and CV;

133.09 (H)(1)(f) GC;

133.09 (H)(1)(g) Any other zoning district in accordance with § 133.09(G) above.

133.09 (H)(2) The order of ranking is from highest (a) to lowest (g). Where a lower ranked alternative is proposed, the Applicant must demonstrate in its application that higher ranked options are not available. The availability of a less expensive lease on a lower ranked site is not sufficient in and of itself to justify using the lower ranked alternative where a higher ranked alterative is otherwise available.

133.09 (H)(2)(a) Collocation on existing Stealth Tower on City-owned property in a Preferred Zoning District.

133.09 (H)(2)(b) Collocation on existing Telecommunications Tower on City-owned property in a Preferred Zoning District.

133.09 (H)(2)(c) Collocation on Existing Structures on City-owned property in a Preferred Zoning District.

133.09 (H)(2)(d) Collocation on existing Telecommunications Tower in a Preferred Zoning District.

133.09 (H)(2)(e) Attachment of Antenna on a current Wireless Communications Facility in a Preferred Zoning District.

133.09 (H)(2)(f) New Stealth Tower in a Preferred Zoning District.

133.09 (H)(2)(g) New Telecommunications Tower in a Preferred Zoning District.

133.09 (H)(3) On property owned by the City, the City shall authorize the application and use of City property after the Applicant executes a lease agreement acceptable to the City. The City shall have no obligation whatsoever to execute such lease even if the Applicant can meet the criteria set forth herein.

133.09 (I) Unstaffed communication Buildings.

133.09 (I)(1) Minimum setbacks. Unmanned communication Buildings shall comply with the setback requirements of the zoning district where such Buildings are situated.

133.09 (I)(2) Size limitations. An unstaffed communication Building shall be a permanent Structure not to exceed 250 square feet in floor area. More than one unstaffed communication Building may be permitted on a site; provided, however, that the total square footage of such Buildings, added together, does not exceed 1,000 square feet. If the site contains more than one Building, the required distance separation between the Buildings may be excused.

§ 133.10 STANDARDS FOR TELECOMMUNICATIONS TOWERS.

133.10 (A) Minimum standards. Except where a variance is granted, every Telecommunications Tower must meet the following minimum standards:

133.10 (A)(1) The Height of a Telecommunications Tower shall not exceed 100 feet.

136.10 (A)(2) All Telecommunication Towers shall be designed and constructed with the capability of accommodating three users.

133.10 (A)(3) Telecommunication Towers or Antennas shall be approved by the Federal Aviation Administration (FAA) or other appropriate agency prior to issuance of a Building Permit by the City and comply with § 133.06 of this Chapter. Prior to the issuance of a Building Permit(s) by the City, the Applicant shall provide evidence that the Telecommunication Towers or Antennas are in compliance with FAA regulations. Where an Antenna will not exceed the highest point of the Existing Structure upon which it is to be mounted, such evidence shall not be required.

133.10 (A)(4) All proposed Telecommunication Towers shall comply with current radio frequency emissions standards of the FCC.

133.10 (A)(5) All Telecommunication Tower sites must comply with the Landscaping requirements of the City in force at the time the application for a Telecommunication Tower site plan approval is submitted to the City. An eight-foot wall constructed in accordance with the City Code, as measured from the finished grade of the site, shall be required around the base of any Tower and may be required around any accessory Building or Structures.

133.10 (A)(6) The minimum required Landscape buffering widths shall be consistent with the requirements of the City Code shall be installed around the entire outside perimeter of the concrete wall and/or buildings, encircling the leased Premises on which said Telecommunication Tower shall be placed. Additional Landscape buffer widths may be required by staff around the outside perimeter of the wall and around any or all anchors or supports if deemed necessary to buffer adjacent properties. The City Commission, upon site plan review, may require additional Landscape buffer widths in excess of the above requirements as is deemed reasonably necessary in order to enhance compatibility with adjacent residential and nonresidential land uses. Landscaping shall be installed on the outside of the perimeter wall.

133.10 (A)(7) Landscaping, consistent with the minimum requirements of the City Code shall be installed on the leased area, around the wall, any Accessory Buildings or Structures. In addition to the City's Landscaping requirements, the following Landscaping shall be provided:

133.10 (A)(7)(a) A minimum row of large Trees or large palms at least 16 feet in height, or half the height taller than the wall, which ever is larger, at a maximum distance of 12 to 15 feet apart, with 10 to 12 feet tall smaller Trees in-between them shall be planted around the perimeter of the wall;

133.10 (A)(7)(b) A continuous branch touching branch Hedge (full to the ground) shall fully screen all non-accessible portions of the wall to the Height of the wall or tallest element (not Tower) at installation. All gates must be opaque, color and type to be approved by the City;

133.10 (A)(7)(c) All Landscaping shall be properly installed and maintained in accordance to the approved site plan and City Code requirements to insure good health and viability. All missing, dead, damaged or diseased Landscaping shall be replaced with like kind per approved plans or at the established grown heights of the existing Landscaping (which ever is larger) within 30 calendar days of notice; and

133.10 (A)(7)(d) In locations where the impact of the Wireless Communications Facility abuts residential properties staff can require such additional Landscaping as necessary to protect the aesthetics and minimize the impact of the surrounding area;

133.10 (A)(7)(e) The City Commission, upon site plan review, may require additional Landscaping in excess of the above requirements as deemed reasonably necessary in order to enhance compatibly with the adjacent residential and nonresidential land uses.

133.10 (A)(8) Telecommunication Towers shall only be located on parcels larger than 2,500 square feet.

133.10 (A)(9) Warning Signs for high voltage and trespassing.

133.10 (A)(9)(a) No Signs, including commercial advertising, Logo, political Signs, flyers, flags, or banners, but excluding warning signs, shall be allowed on any part of an Antenna or Tower. Any Signs placed in violation of this Section shall be removed immediately at the facility Owner's expense.

133.10 (A)(9)(b) If high voltage is necessary for the operation of the Telecommunication Tower, associated equipment, or Backhaul Network or any Accessory Structures, "HIGH VOLTAGE—DANGER" warning Signs shall be permanently attached to the fence or wall and spaced no more than 40 feet apart.

133.10 (A)(9)(c) "NO TRESPASSING" warning Signs shall be permanently attached to the fence or wall and spaced no more than 40 feet apart.

133.10 (A)(9)(d) The height of the lettering of the warning Signs shall be at least 12 inches in height. The warning Signs shall be installed at least five feet above the finished grade.

133.10 (A)(9)(e) The warning Signs may be attached to freestanding Poles if the content of the Sign may be obstructed by Landscaping.

133.10 (A)(10) Mobile or immobile equipment not used in direct support of a Tower facility shall not be stored or parked on the site of the Telecommunication Tower, unless repairs to the Tower are being made.

133.10 (A) (11) The minimum setbacks shall conform to the zoning districts where the Towers are situated. Notwithstanding the above, the City may require minimum setback requirements for properties zoned industrial, up to 25 feet from the rear yard and front yard, and 15 feet from the side yards, as measured from the base of the Tower or from the guy wire anchor, whichever is closest to the property line or Right-Of-Way when, in the City Manger's discretion, the City Manager believes said setbacks to be necessary in the interest of protection and safety of the public.

133.10 (A)(12) All Telecommunication Towers shall be located no closer than 100% of the height of the Tower from Residential Areas or districts, as measured on a straight line from the two closest points between the nearest residential zoning district line and the nearest point of the proposed Tower Structure.

133.10 (A)(13) The minimum distance separation between an existing Tower and a proposed Tower shall be no less than one mile. When a Stealth/Camouflaged Facility or Tower is proposed to be used by the Applicant, or an existing Tower or Structure that serves another purpose, i.e., Poles, then, in that event, the City Manager, after administrative review, may reduce the minimum separation as set forth above up to 25% of said minimum separation, providing that the proper Landscaping and/or buffering is put in place at the direction of the City Manager.

136.10 (A)(14) All Buildings and other Structures to be located on the same property as a Telecommunications Tower shall conform with the setbacks established for the underlying zoning district.

133.10 (A)(15) Each application for a Wireless Communications Facility may be required to include written approval or a statement of no objection from other State agencies that may regulate Wireless Communications Facility siting, design, and construction.

133.10 (A)(16) Removal of abandoned or unused facilities. A provider who has determined to discontinue its operations or part of its operations in the City must either:

133.10 (A)(16)(a) Remove its own facilities;

133.10 (A)(16)(b) Provide information satisfactory to the City Manager that the provider's obligations for its equipment in the Public Right-Of-Way or public easement or Private Property under this Section have been lawfully assumed by another provider; or

133.10 (A)(16)(c) Submit to the City Manager a proposal and instruments for transferring ownership of its equipment to the City. If a provider proceeds under this clause, the City may, at its option:

133.10 (A)(16)(c)(1) Assume ownership of the equipment with a $10 nominal consideration, or

133.10 (A)(16)(c)(2) Require the provider, at its own expense, to remove it, or

133.10 (A)(16)(c)(3) Require the provider to post a bond in an amount sufficient to reimburse the City for reasonably anticipated costs to be incurred in removing the equipment. Equipment of a provider who fails to comply with the preceding paragraph and which, for 12 months, remains unused shall be deemed to be Abandoned. Abandoned equipment is deemed to be a nuisance. The City may exercise any remedies or rights it has at Law or in equity, including, but not limited to:

133.10 (A)(16)(c)(3)(a) Abating the nuisance,

133.10 (A)(16)(c)(3)(b) Taking possession of the equipment and restoring it to a useable condition, or

133.10 (A)(16)(c)(3)(c) Requiring removal of the equipment by the provider or by the provider's surety under the bond required by § 133.14 herein. Telecommunication Towers being utilized for other purposes, including but not limited to light standards and power poles, may be exempt from this provision.

133.10 (A)(17) Signs and advertising. The use of any portion of a Tower for signs or advertising purposes including company name, banners, flags, streamers, etc., shall be strictly prohibited.

133.10 (A)(18) Accessory Buildings or Structures. All accessory Buildings or Structures shall meet all Building design standards as listed in this Code, and in accordance with the provisions of the Florida Building Code. All Accessory Buildings or Structures shall require a Building Permit issued by the City.

133.10 (A)(19) Colors. Except where superseded by the requirements of other county, State, or federal regulatory agencies possessing jurisdiction over Telecommunications Towers, Telecommunications Towers shall be painted or constructed in neutral colors, designed to blend into the surrounding environment such as non-contrasting gray, earth tones of appropriate shades of green, or such other colors as determined by the City Manager. All Towers must be repainted every three Years and areas where paint has chipped off the Tower must be repainted, at a minimum, once a Year.

133.10 (A)(20) In the event a hurricane or any other weather warning is issued by the appropriate governmental entity that may impact Wireless Communications Facilities in the City, the City Manager may order a service provider to temporarily lower and Secure such facilities until such time as the warning is canceled.

§ 133.11 STANDARDS FOR ANTENNAS.

133.11 (A) Minimum standards.

133.11 (A)(1) Antennas on rooftops or Building mounted shall be permitted as an Accessory Use in all Preferred Zoning Districts except in the residential zoning districts, subject to the procedure and requirements provided elsewhere in this Chapter, as follows:

133.11 (A)(1)(a) No commercial advertising shall be allowed on an Antenna;

133.11 (A)(1)(b) No signals, lights, or illumination shall be permitted on an Antenna, unless required by the Federal Communications Commission or the Federal Aviation Administration;

133.11 (A)(1)(c) Any related unstaffed equipment Building shall not contain more than 250 square feet of gross floor area or be more than ten feet in height;

133.11 (A)(1)(d) If the equipment Building is located on the Roof of the Building, the area of the equipment Building shall not occupy more than 25% of the Roof area;

133.11 (A)(1)(e) Antennas, and related equipment Buildings, shall be set back a minimum of 20 feet from the edge of the Building or rooftop, located or screened to minimize the visual impact of the Antenna upon adjacent properties and shall be of a material or color which matches the exterior of the Building or Structure upon which it is situated; and

133.11 (A)(1)(f) Antennas shall only be permitted on Buildings that are at least 50 feet tall. Antennas may be placed on Buildings less than 50 feet tall if the City Manager determines that public safety needs warrant the Antenna.

133.11 (A)(2) Building rooftop Stealth Antennas may not extend more than 20 feet above highest point of a Roof. Stealth Antennas attached to but not above rooftop Structures shall be exempt from this provision. Antennas may exceed 20 feet above the Roof if the City Manager determines that public safety needs warrant additional height.

133.11 (A)(3) Building rooftop non-Stealth Antennas may not extend more than ten feet above highest point of a Roof. Stealth Antennas attached to but not above rooftop Structures shall be exempt from this provision. Antennas may exceed 20 feet above the Roof if the City Manager determines that public safety needs warrant additional height.

133.11 (B) Antenna types. To minimize adverse visual impacts, Stealth Antenna types shall be preferred. If a non-Stealth Antenna is proposed, the application shall be required to demonstrate, in a technical manner acceptable to the City, why the Stealth Antenna (i.e. an Antenna incorporated into the architecture of the Building or fully screened from view from sight proximate to the Antenna) cannot be used for the particular application. This does not preclude a combination of the various types of Antenna.

133.11 (C) Antenna dimensions. Antenna dimensions shall be reviewed by the City Manager as required by existing technology. A statement shall be submitted, prepared by a professional registered Engineer licensed to practice in the state, and competent to evaluate Antenna choices, to certify the need for the required dimensions.

133.11 (C)(1) Whip (omni-directional) Antennas and their supports must not exceed 15 feet in height and three inches in diameter and must be constructed of a material or color that matches the exterior of the Building.

133.11 (C)(2) Microwave Dish Antennas located below 65 feet above the ground may not exceed six feet in diameter. Microwave Dish Antennas located 65 feet and higher above the ground may not exceed eight feet in diameter. Ground-mounted dish Antennas must be located or screened so as not to be visible from abutting public Streets or adjacent properties.

133.11 (C)(3) No more than five dish Antennas shall be installed on a Monopole Tower.

133.11 (D) Aircraft hazard. Prior to the issuance of a permit by the City, the application shall provide evidence that the Telecommunications Tower or Antenna is in compliance with FAA regulations. Where an Antenna will not exceed the highest point of the Existing Structure upon which it is to be mounted, such evidence shall not be required.

§ 133.12 USE OF PUBLIC RIGHTS-OF-WAY.

133.12 (A) No Telecommunications Towers or Equipment Facilities may be installed or placed in Public Right-Of-Way, with the exception that an Antenna may be placed on any Pole that has been already installed or placed in the Right-Of-Way, with the consent of the Pole owner, subject to the standards in this Section.

133.12 (B) Development standards.

133.12 (B)(1) Any Antenna to be installed in the Right-Of-Way, and its accompanying Equipment Facilities, shall be subject to all site plan review and permitting requirements of the City.

133.12 (B)(2) When installing an Antenna on a Pole, any and all associated Equipment Facilities shall be placed in any of the following areas:

133.12 (B)(2)(a) Underground in the Right-Of-Way; or

133.12 (B)(2)(b) On an adjacent property, with the consent of the property Owner provided that all the wiring is underground.

133.12 (B)(3) Before installing any Antenna on any Pole already installed in the Right-Of-Way, an Applicant must complete the Antenna application pursuant to this Chapter and must also comply with the other applicable sections of this Chapter. An application pursuant to this Section shall not be deemed a Collocation application.

133.12 (B)(4) No Antenna may be installed under this Section until the Applicant fully complies with all the indemnification and insurance requirements of this Chapter.

133.12 (B)(5) An Antenna may be mounted on an existing Pole, with the consent of the Pole Owner, provided the Height of the Antenna does not extend more than ten feet above the top of such Pole. An existing Pole may be modified, replaced or rebuilt to accommodate an Antenna so long as the height of such Pole is not increased by more than ten feet from its existing height.

§ 133.13 REPLACEMENT OR MODIFICATION OF A WIRELESS COMMUNICATIONS FACILITY.

133.13 (A) A Telecommunications Tower that is modified or reconstructed to accommodate the Collocation of an additional Antenna shall be of the same Telecommunications Tower type as the existing Telecommunications Tower, unless the City allows reconstruction as a monopole pursuant to this Section.

133.13 (B) An existing Telecommunications Tower may be modified or rebuilt to a taller height to accommodate an additional Antenna. Such modification or rebuild of the Telecommunications Tower shall require the approval of the City Commission. The new height shall comply with the requirements of this Chapter.

133.13 (C) A Telecommunications Tower that is being rebuilt to accommodate an additional Antenna and that requires movement onsite from its existing location shall require an application for a new Tower. After the Telecommunications Tower is rebuilt to accommodate Collocation, only one Telecommunications Tower may remain on the site. A relocated onsite Telecommunications Tower shall continue to be measured from the original Telecommunications Tower location for purposes of calculating separation distances between Towers pursuant to this Section. The relocation of a Telecommunications Tower pursuant to this Section shall not be deemed to cause a violation of the separation requirements contained herein.

133.13 (D) Modification of existing Wireless Communications Facility. Minor modification of a Wireless Communications Facility shall not require an additional approval so long as the modification does not change the height of the Telecommunications Tower, enlarge the Antenna Array, enlarge the Equipment Facility and does not involve any Collocation. All other modifications shall require approval.

133.13 (E) A Pre-Existing Tower, including a nonconforming Tower, may be structurally modified to permit Collocation or may be replaced through no more than administrative review and Building Permit review, and is not subject to public hearing review, if the overall height of the Tower is not increased and, if a replacement, the replacement Tower is a Monopole Tower or, if the Pre-Existing Tower is a Stealth Tower, the replacement Tower is a like-Stealth Tower.

133.13 (F) Rebuilding damaged or destroyed nonconforming Towers or Antennas. Legal nonconforming Telecommunications Towers or Antennas that are damaged or destroyed may be rebuilt subject to City Code. Building permits to rebuild the facility shall comply with the then applicable Building codes and shall be obtained within 180 calendar days from the date the facility is damaged or destroyed. If no permit is obtained or if the permit expires, the Telecommunications Tower or Antenna shall be deemed Abandoned as specified in § 133.10 herein.

§ 133.14 INDEMNIFICATION, INSURANCE AND SECURITY FUNDS.

133.14 (A) ***General indemnification***.

133.14 (A)(1) The City shall not enter into a lease agreement with a Wireless Communications provider unless the Applicant agrees to indemnify, defend and hold harmless and at City's option, pay for an attorney selected by City, to defend the City and the City's consultants, engineers, attorneys and assigns and their officials, employees and

agents (collectively referred to as "indemnities") and each of them from and against all loss, costs, penalties, fines, damages, claims, expenses (including attorney's fees) or liabilities (collectively referred to as "liabilities") by reason of any injury to or death of any Person or damage to or destruction or loss of any property arising out of, resulting from, or in connection with:

133.14 (A)(1)(a) The performance or non-performance of the actions contemplated by this Chapter which is or is alleged to be directly or indirectly caused, in whole or in part, by any act, omission, default or negligence (whether active or passive) of the Applicant or its employees, agents or subcontractors (collectively referred to as "applicants"), regardless of whether it is, or is alleged to be, caused in whole or in part (whether joint, concurrent or contributing) by any act, omission, default or negligence (whether active or passive) of the indemnities, or any of them; or

133.14 (A)(1)(b) The failure of the Applicant to comply with any of the paragraphs herein or the failure of the provider to conform to statutes, ordinances, or other regulations or requirements of any governmental authority, federal or State, in connection with the actions taken under this Chapter.

133.14 (A)(2) Indemnification for construction contracts. In the event that a lease agreement entered into between the City and an Applicant is deemed to be a "construction contract" pursuant to Florida Statutes §725.06, the following indemnification shall apply in lieu of subsection (A)(1) above.

133.14 (A)(2)(a) To the fullest extent permitted by Florida Statutes Chapter 725, the Applicant hereby agrees to indemnify and hold harmless the City, its officers and employees from liabilities, damages, losses, and costs including, but not limited to reasonable attorney's fees, to the extent caused by the negligence, recklessness, or intentionally wrongful misconduct of the provider and persons employed or utilized by the provider in connection with the actions taken under this Chapter.

133.14 (A)(3) The indemnification obligations under this Chapter shall not be limited in any way by any limitation on the amount or type of damages, compensation, or benefits payable by or for the Applicant and/or Persons employed or utilized by the provider, in the performance of the actions taken under this Chapter, under any insurance required by this Chapter including, but not limited to, workers' compensation acts, disability benefit acts, or other employee benefit acts.

133.14 (A)(4) The obligations of the provider under this Chapter shall not extend to the liability of the consultant, the consultant's consultants, and agents and employees or any of them arising out of:

133.14 (A)(4)(a) The preparation or approval of maps, drawings, opinions, reports, surveys, change orders, designs or specifications, or

133.14 (A)(4)(b) The giving of or the failure to give directions or instructions by the consultant, the consultant's consultants, and agents and employees of any of them provided such giving or failure to give is the primary cause of the injury or damage.

133.14 (B) ***Insurance***. The City shall not grant or approve an application for the installation of a Tower, Antenna and/or Wireless Communications Facility and shall not enter into any lease agreement for placement of facilities on City-owned property until and unless the City obtains assurance that such Applicant or lessee (and those acting on its behalf) have adequate insurance. At a minimum, the following requirements must be satisfied:

133.14 (B)(1) The policies of insurance shall be primary and written on forms acceptable to the City and placed with insurance carriers approved and licensed by the Insurance Department in the State of Florida and meet a minimum financial AM Best Company rating of no less than "A-Excellent: FSC VII." In the event that the insurance carrier's rating shall drop, the insurance carrier shall immediately notify the City. No changes shall be made to these specifications without prior written specific approval by the City.

133.14 (B)(2) The City of Weston, Calvin Giordano & Associates, Inc., Weiss Serota Helfman Pastoriza Cole & Boniske, P.L., and Municipal Technologies, LLC, shall be named as additional insured, as their interests may appear on all policies except workers' compensation. As respects general liability coverage, the completed operations coverage and the additional insured status of the City must be maintained for this project for not less than five years following completion and acceptance by the City or no more restrictive than ISO form CG 20 37 (07 04). Waiver of subrogation in favor of the City of Weston is required on all policies except workers' compensation.

133.14 (B)(3) Applicant shall provide statutory workers' compensation, and employer's liability insurance with limits of not less than $1,000,000 per employee per accident, $1,000,000 disease aggregate and $1,000,000 per employee per disease for all personnel on the worksite. If applicable, coverage for the Jones Act and US Longshoremen and Harborworkers Exposures must also be included. (Elective exemptions will not satisfy this requirement. Certificates evidencing an employee leasing company as employer will not be accepted).

133.14 (B)(4) In the event the Applicant has "leased" employees, the Applicant or the Employee leasing company must provide evidence of a workers' compensation policy for all personnel on the worksite. All documentation must be provided for review and approval by the City. The Applicant is responsible for the workers' compensation of any and all subcontractors used by the contractor. Evidence of workers' compensation insurance coverage for all subcontractors must be submitted prior to any work being performed.

133.14 (B)(5) Commercial general liability: Including but not limited to bodily injury, property damage, contractual liability, products and completed operations (without limitation), watercraft or aircraft liability if those vehicles will be utilized, and personal injury liability with limits of not less than $2,000,000 each occurrence, covering all work performed under this contract.

133.14 (B)(6) Business automobile liability: Applicant agrees to maintain business automobile liability at a limit of liability not less than $1,000,000 each occurrence covering all work performed under this contract.

133.14 (B)(7) Applicant further agrees coverage shall include liability for owned, non-owned and hired automobiles. In the event Applicant does not own automobiles, Applicant agrees to maintain coverage for hired and non-owned auto liability, which may be satisfied by way of endorsement to the commercial general liability policy or separate business auto liability policy. If private passenger automobiles are used in the business, they must be commercially insured.

133.14 (B)(8) Umbrella liability: Umbrella polices are acceptable to provide the total required liability limits.

133.14 (C) The rights reserved by the City with respect to any security fund or bond established pursuant to this Chapter are in addition to all other rights and remedies the City may have under applicable Law.

133.14 (D) Any Person who knowingly breaches any provision of this Chapter shall upon receipt of written notice from the City be given a time schedule to cure the violation. Failure to commence to cure the violation within 30 calendar days and to complete cure, to the City's satisfaction, within 60 calendar days, or such longer time as the City may specify, shall result in revocation of any permit or license and the City shall seek any remedy or damages as provided below.

133.14 (E) ***Violations***.

133.14 (E)(1) In addition to revoking any permit or license for violation of this Chapter and any other remedies available at law, including but not limited to Florida Statutes § 166.0415 and Chapter 162, or equity or provided in this Chapter, the City may apply any one or combination of the following remedies in the event an Applicant violates this Chapter, or applicable local Law or order related to the Public Rights-Of-Way:

133.14 (E)(1)(a) Failure to comply with the provisions of this Chapter or other applicable Law may result in imposition of penalties to be paid by the Registrant to the City as provided in Florida Statutes Chapter 162 and Chapter 31 of the City Code.

133.14 (E)(1)(b) In addition to or instead of any other remedy, the City may seek legal or equitable relief from any court of competent jurisdiction.

133.14 (E)(2) ***No waiver***. Failure of the City to enforce any requirements of this Chapter shall not constitute a waiver of the City's right to enforce that violation or subsequent violations of the same type or to seek appropriate enforcement remedies.